UNIVERSITY OF TORONTO
3 1761 00327217 6

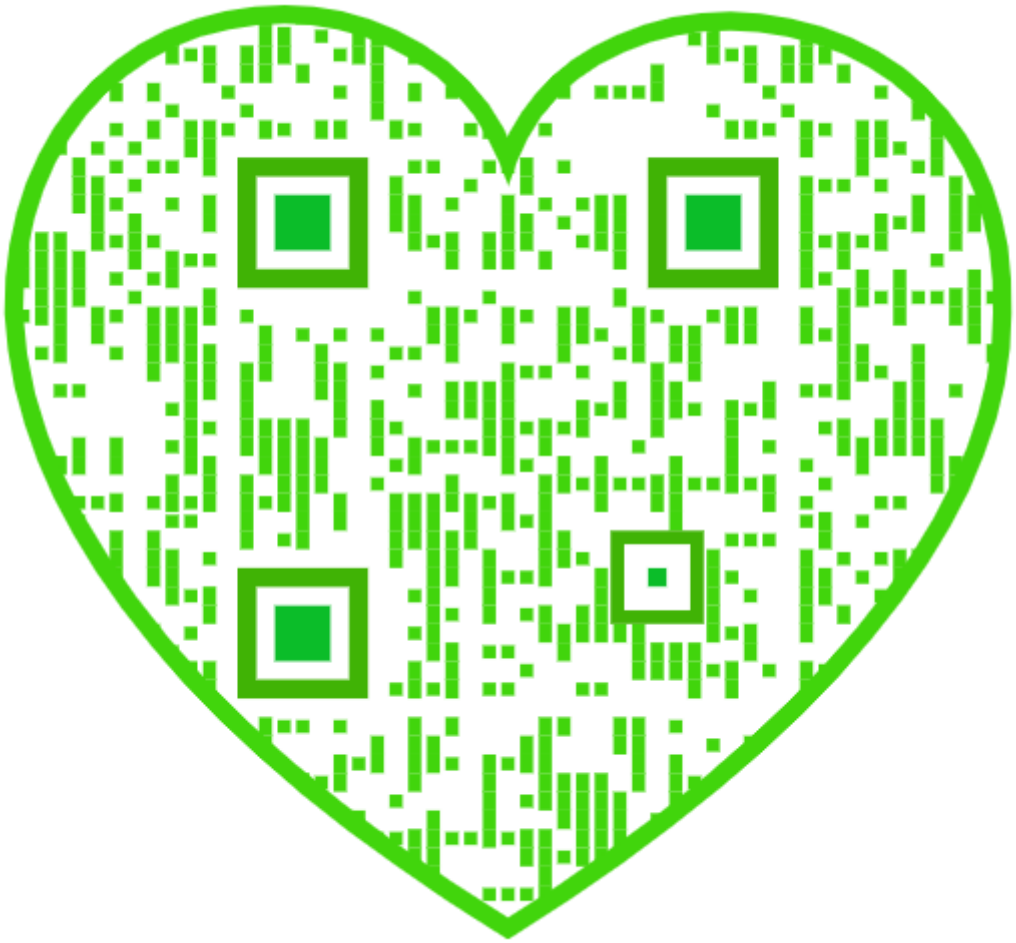

Presented to the

LIBRARY *of the*

UNIVERSITY OF TORONTO

by

ROBERT H. MORRIS

Digitized by the Internet Archive
in 2007 with funding from
Microsoft Corporation

http://www.archive.org/details/machinemoldingfo00inteuoft

I. C. S.
REFERENCE LIBRARY

A SERIES OF TEXTBOOKS PREPARED FOR THE STUDENTS OF THE INTERNATIONAL CORRESPONDENCE SCHOOLS AND CONTAINING IN PERMANENT FORM THE INSTRUCTION PAPERS, EXAMINATION QUESTIONS, AND KEYS USED IN THEIR VARIOUS COURSES

MACHINE MOLDING
FOUNDRY APPLIANCES
MALLEABLE CASTING
BRASS FOUNDING
BLACKSMITH-SHOP EQUIPMENT
IRON FORGING
TOOL DRESSING
HARDENING AND TEMPERING
TREATMENT OF LOW-CARBON STEEL
HAMMER WORK
MACHINE FORGING
SPECIAL FORGING OPERATIONS

315918

SCRANTON
INTERNATIONAL TEXTBOOK COMPANY
53B

Copyright, 1901, by THE COLLIERY ENGINEER COMPANY.

Copyright, 1903, 1905, 1906, by INTERNATIONAL TEXTBOOK COMPANY.

Entered at Stationers' Hall, London.

Machine Molding: Copyright, 1903, by INTERNATIONAL TEXTBOOK COMPANY. Entered at Stationers' Hall, London.

Foundry Appliances: Copyright, 1903, by INTERNATIONAL TEXTBOOK COMPANY. Entered at Stationers' Hall, London.

Malleable Casting: Copyright, 1903, by INTERNATIONAL TEXTBOOK COMPANY. Entered at Stationers' Hall, London.

Brass Founding: Copyright, 1901, by THE COLLIERY ENGINEER COMPANY. Copyright, 1905, by INTERNATIONAL TEXTBOOK COMPANY. Entered at Stationers' Hall, London.

Blacksmith Shop Equipment: Copyright, 1906, by INTERNATIONAL TEXTBOOK COMPANY. Entered at Stationers' Hall, London.

Iron Forging: Copyright, 1906, by INTERNATIONAL TEXTBOOK COMPANY. Entered at Stationers' Hall, London.

Tool Dressing: Copyright, 1906, by INTERNATIONAL TEXTBOOK COMPANY. Entered at Stationers' Hall, London.

Hardening and Tempering: Copyright, 1906, by INTERNATIONAL TEXTBOOK COMPANY. Entered at Stationers' Hall, London.

Treatment of Low-Carbon Steel: Copyright, 1906, by INTERNATIONAL TEXTBOOK COMPANY. Entered at Stationers' Hall, London.

Hammer Work: Copyright, 1906, by INTERNATIONAL TEXTBOOK COMPANY. Entered at Stationers' Hall, London.

Machine Forging: Copyright, 1906, by INTERNATIONAL TEXTBOOK COMPANY. Entered at Stationers' Hall, London.

Special Forging Operations: Copyright, 1906, by INTERNATIONAL TEXTBOOK COMPANY. Entered at Stationers' Hall, London.

All rights reserved.

PRESS OF
INTERNATIONAL TEXTBOOK COMPANY
SCRANTON, PA.

27043

53B

CONTENTS

	Section	Page
MACHINE MOLDING		
Small Machines	48	1
Pneumatic Rammers	48	1
Molding Machines	48	3
FOUNDRY APPLIANCES		
Buildings and Grounds	49	1
General Arrangement	49	2
Buildings	49	4
Equipment	49	12
Small Machines and Apparatus	50	1
Flasks	50	1
Core Rooms	50	15
Cleaning-Room Equipment	50	27
MALLEABLE CASTING		
Properties and Composition	51	1
Chemical Composition of Malleable Iron	51	4
Irons Used in Making Malleable Castings	51	9
Iron Mixtures	51	12
Malleable-Iron Production	51	17
Melting Processes and Equipment	51	17
Open-Hearth Melting Process	52	1
Repairing the Furnace	52	9
Preparation of Molds for Malleable Castings	52	26
Tapping and Pouring the Iron	52	27
Cleaning and Assorting Hard Castings	52	29
Annealing Process	53	1
Annealing Pots and Furnaces	53	6

MALLEABLE CASTING—*Continued*	*Section*	*Page*
Provisions for Heating Annealing Ovens	53	12
Operating Annealing Ovens	53	19
Disposition of Malleable Castings	53	24
Special Annealing Equipment	53	31
Miscellaneous Processes and Equipment	53	34
BRASS FOUNDING		
Making Brass Castings	54	1
Materials Used in Brass Molding	54	2
Making Molds for Brass Castings	54	4
Cleaning Brass Castings	54	6
Appliances for Melting Brass	54	7
Crucible Furnace	54	7
Crucibles for Melting Brass	54	15
Melting Copper and Old Brass	54	17
Deoxidizing Metals	54	22
Alloys and Mixtures	54	25
Copper and Tin Alloys	54	25
Copper and Zinc Alloys	54	28
Lead and Copper Alloys	54	30
Manganese in Alloys	54	31
Bismuth in Alloys	54	32
Antimony and Babbitt Metals	54	33
Phosphorus and Phosphor Bronze	54	36
BLACKSMITH-SHOP EQUIPMENT		
Heating Devices	56	1
Forge Tuyères	56	2
Production of the Blast	56	5
Disposal of Smoke and Gases	56	9
Fuels	56	13
Blacksmithing Tools	56	17
Floor and Bench Tools	56	27
IRON FORGING		
Manufacture of Iron	57	1
Work Involving Scarf Welds	57	33
Work Involving Butt Welds	57	43

IRON FORGING—*Continued*	*Section*	*Page*
Work Involving Lap Welds	57	45
Practical Examples of Forging	57	46
Welding Pipe	57	53
TOOL DRESSING		
Treatment of Tool Steel	58	1
Working Tool Steel	58	6
Temper Colors and Corresponding Temperatures of Steel	58	9
Lathe Tools	58	15
Tool Dressing	58	20
Welding Tool Steel	58	25
High-Speed Tool Steels	58	29
Recognizing Steel	58	33
Machine-Shop Cutting Tools	58	36
Lathe and Planer Tool Models	58	36
HARDENING AND TEMPERING		
Carbon Steels	59	1
Methods of Heating	59	2
Annealing	59	4
Hardening Solutions	59	6
Methods of Tempering	59	8
Examples of Hardening and Tempering	59	9
Selection of Steel	59	28
High-Speed Tool Steels	59	29
Special Furnaces for Hardening and Tempering	59	32
Hardening Baths	59	42
High-Temperature Measurements	59	44
TREATMENT OF LOW-CARBON STEEL		
Properties and Manufacture of Low-Carbon Steel	60	1
Nickel Steel	60	7
Annealing Low-Carbon Steel	60	9
Annealing Steel Forgings	60	11
Oil Treatment of Low-Carbon Steel	60	13

	Section	Page
Treatment of Low-Carbon Steel *Continued*		
Temperatures for Treating Steel	60	15
Case-Hardening Work Without Colors	60	20
Case-Hardening for Colors	60	24
Bluing Steel	60	36
Hammer Work		
Power Hammers	61	1
Steam Hammers	61	10
Steam-Hammer Valves	61	12
Proper Weight of Hammer	61	18
Hammer Foundations	61	19
Hammer Tools	61	21
Forging Wrought Iron	61	27
Forging Low-Carbon Steel	61	30
Welding Steel to Iron	61	35
Forging High-Carbon Steel	61	36
Machine Forging		
Rolling Operations	62	2
Graded Rolling	62	5
Screw-Thread Rolling	62	9
Drop Forging	62	12
Drop Hammers and Presses	62	12
Drop-Hammer Foundations	62	22
Shears	62	27
Special Forging Operations		
Special Forging Equipment	63	1
Heating Furnaces	63	1
Handling Devices	63	12
Forging Structural Shapes	63	17
Electric Welding	63	22
Thermit Welding	63	26
Soldering, Sweating, and Brazing	63	30
Soldering Aluminum	63	35
Brazing Band Saws	63	43
Brazing Cast Iron	63	44

SPECIAL FORGING OPERATIONS—*Continued*	*Section*	*Page*
Bending Brass and Copper Pipe	63	45
Estimating Stock	63	47
Useful Tables	63	49
Temperatures Corresponding to Various Colors	63	49

PUBLISHERS' STATEMENT

The publishers desire to acknowledge the assistance of the following in the preparation and subsequent revision of this volume:

Richard Moldenke, Ph. D., Secretary American Foundrymen's Association, member American Society of Mechanical Engineers, Director of Pennsylvania Malleable Company; Thos. D. West, Past President American Foundrymen's Association, member American Society of Mechanical Engineers, author of "American Foundry Practice," "Molders' Text Book," and "The Metallurgy of Cast Iron," and Manager of The Thos. D. West Foundry Co.; S. H. Stupakoff, President The Fullman Co., Pittsburg, Pa., member Engineering Society of Western Pennsylvania, Society of Sciences and Arts, and American Foundrymen's Association, Past President German-American Engineers' Society; Henry Hanson (deceased), Associate Editor of *The Foundry;* V. M. Moore, Vice-President and Manager, Chisholm & Moore Mfg. Co., Cleveland, Ohio; A. S. Capwell, M. E., Mechanical Engineer with Pratt & Letchworth Co., in connection with their Buffalo and Brantford plants; Moritz W. Boehm, Instructor of Manual Training, North Side High School, Chicago, Ill.; David Gorrie, formerly Foreman Blacksmith with the M. C. Bullock Mfg. Co., Instructor in Blacksmithing at the Chicago English High and Manual Training School; F. A. Bragg, Foreman Blacksmith, Allis-Chalmers Co., Scranton, Pa.; and M. K. Hinch, Foreman Blacksmith, New York Ship Building Co., Elizabethport, N. J.

The following members of the regular staff have also assisted in this work: J. J. Clark, M. E.; H. M. Lane, M. E.;

(now Editor of *The Foundry*); A. B. Clemens, M. E.; F. W. Brady, M. E.; E. H. Powell, B. S.; F. B. Hamilton; and B. R. Hall.

The publishers also desire to acknowledge their indebtedness to the following firms for courtesies extended: Allis-Chalmers Co., Scranton, Milwaukee, and Chicago; The Standard Tool Co., The Chicago Pneumatic Tool Co., and Sullivan Machinery Co., Chicago, Ill.; The Adams Co., Dubuque, Iowa; The Williams, White Co., Moline, Ill.; The Chisholm & Moore Mfg. Co., Cleveland, Ohio; J. W. Paxson Co., and The S. Obermayer Co., Philadelphia, Pa.; Manning, Maxwell & Moore, and the Henry-Bonnard Bronze Co., New York, N. Y.; Veeder Mfg. Co., Hartford, Conn.; The Thos. D. West Foundry Co., Sharpsville, Pa.; The Pratt & Letchworth Co., Buffalo, N. Y., and many others who have shown courtesies to their representatives, and have sent catalogs, drawings, or other material for use in the preparation of this volume. They also extend their thanks to the *American Machinist*, *Machinery*, *Engineering Magazine*, and *The Foundry* for information gleaned from their files and other favors rendered.

MACHINE MOLDING.

SMALL MACHINES.

RAMMERS AND MOLDING MACHINES.

PNEUMATIC RAMMERS.

1. Rammers for Light Work.—A form of **pneumatic rammer** for light work is shown in Fig. 1 (*a*), which is operated by air under a pressure of from 40 to 90 pounds per square inch. It consists of a cylinder *a* supported at the middle on trunnions *b*, *b* that have their bearings in a frame *c*. This form is provided with two rammers *d* and *e*, one at each end *f* and *g* of the piston rods, which extend beyond the ends of the cylinder. One of the rammers is a peen *d* and the other *e* a butt rammer. Either of these may be used at will by swinging the cylinder on its trunnions so that the desired one stands downwards. The stroke of the piston is regulated by an ingeniously constructed automatic reversing valve. The air is supplied through a hose *h*. A wire rope *i*, which passes over a pulley and carries a counterweight, is attached to an eyebolt *j* in the top of the machine.

A pneumatic rammer strikes from 200 to 300 blows per minute and requires one man to operate it. It is equally economical and applicable for green-sand, loam, floor, or machine work. It strikes with uniform pressure, and hence

COPYRIGHTED BY INTERNATIONAL TEXTBOOK COMPANY. ENTERED AT STATIONERS' HALL, LONDON

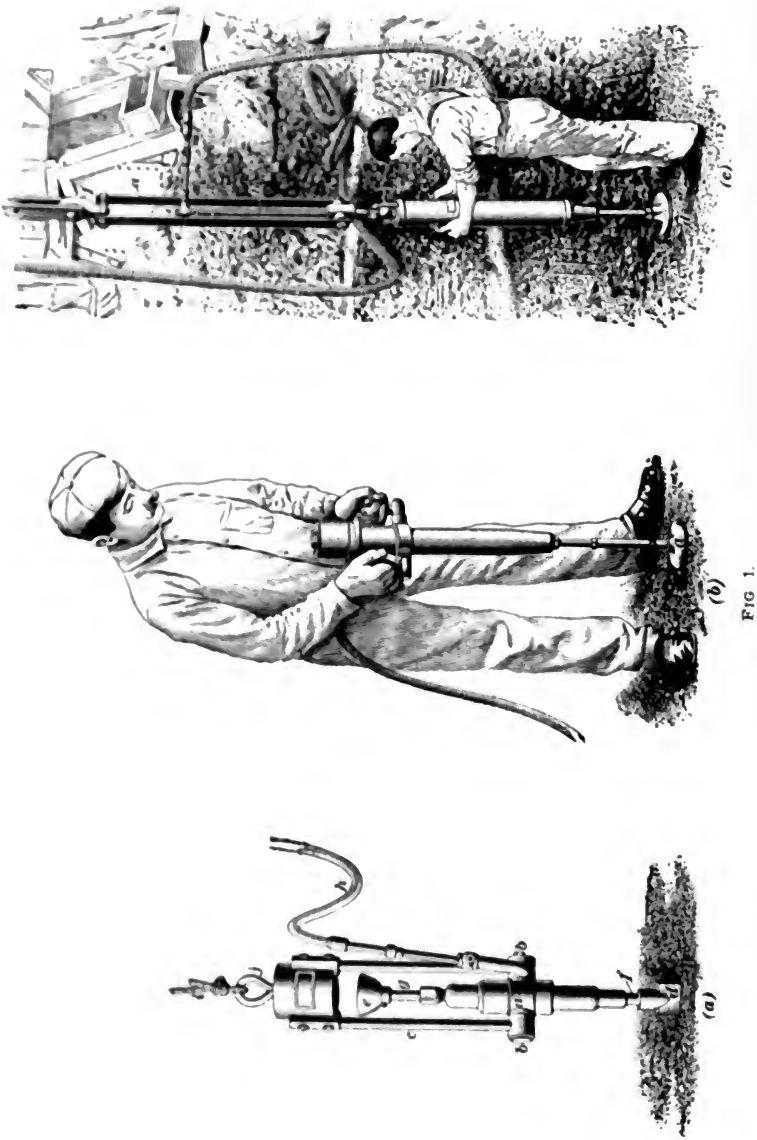

FIG 1.

the ramming can be done more evenly and far better than by hand. In Fig. 1 (*b*) is shown a portable form of pneumatic rammer that is held by handles attached to the cylinder. This form has only one rammer *a*. The end of the piston rod is constructed in such a manner that either a peen or a butt rammer may be attached to it. The flow of air is controlled by a valve operated by a small trigger in the right-hand handle.

2. Rammers for Heavy Work.—In Fig. 1 (*c*) is shown another form that is especially serviceable for backing up large and deep molds, which ordinarily takes a large gang of men several days to ram them in the old way. This rammer is attached to the supporting frame *a* by means of a long screw *b*. By rotating the rammer by means of the handles *c*, *c*, while it is operating, it is lowered or raised as required to allow the tamping plate *d* to reach the sand in the molds. The screw is hollow and serves to conduct the air to the cylinder from the hose that is attached by means of a swivel coupling *e*. The hook *f* serves to attach the rammer to a hoist on the trolley of a jib crane or some similar support that will permit the rammer to be easily shifted over the surface of the mold. A mold occupying a pit 30 feet long, 14 feet wide, and 8 feet deep requires, according to regular practice, about 25 men 3 days to ram up the sand back of the mold ready for casting. With two ramming machines of the form shown in Fig. 1 (*c*), 12 men can fill and ram it in 1 day.

MOLDING MACHINES.

3. The principal mechanical operations in molding consist of filling the flasks with sand, ramming, and withdrawing the pattern. The filling is usually done by hand or with the aid of overhead conveyers. Molding machines perform mechanically a limited number of the operations that are necessary to produce a complete mold. In some machines

preference is given to the ramming, in others to the drawing of the patterns, while others are provided with facilities for filling the molds with sand, and a few of the latest designs include devices for rapping the patterns. Some machines perform several of the molding functions, but none combine all of them at the same time. A large portion of the work necessary to complete a mold is left in all cases to be done by hand. Many attempts have, however, been made to do away entirely with all-hand work, and to produce mechanically complete molds with the aid of machinery, but without success. The ideal molding machine will be one that makes a complete mold with the least complicated mechanism. In order to be successful, it should be simple in construction and operation, and by its use the cost of castings should be lessened. It is not only necessary to cheapen some one or more of the molding operations, but the cost of others must not be increased.

The economical use of molding machines requires good judgment on the part of the superintendent and foreman of the foundry and ordinary intelligence and good will on the part of the operator. It is not economical to mold a few small articles in large flasks and on large or heavy machines, flat work on machines with deep draft, to use plain patterns with easy draft on stripping-plate machines, or mold round shapes in square flasks.

Manufacturers of molding machines design and construct them to suit nearly all conditions, and if they are to be used for producing a continuous run of the same kind of casting, machines adapted to that special need will be found the most economical.

4. Mold Presser.—A **mold presser**, sometimes called a **squeezer**, is the simplest form of molding machine. Such machines are suitable for molding flat articles, as builders' hardware, stove lids, washers, wrenches, etc., which are molded mostly in snap flasks. The object of the machine is to obviate the hand-ramming operation and to increase the daily output of the molder.

A simple form of machine for pressing the molds is shown in Fig. 2, in which the mechanism is all above the flask and the sand, and hence the working parts of the machine receive no injury from this source. The sand is pressed into the flask *a* by a presser head *b*, which is lowered on top of the follow board *c* by means of the hand lever *d* and a geared eccentric and toggle-joint in the case *e*. The machine is fastened to a post *f* by means of a bolt that passes through a slot *g*, thus making provision for a vertical adjustment over the table *h*. A counterweight *i* automatically lifts the presser head when the hand is removed from the lever. The portable form of this machine is placed on a truck.

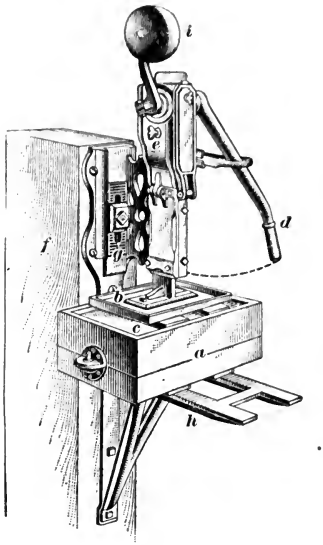

FIG. 2.

5. Another style of machine for pressing the molds is shown in Fig. 3, and consists of a frame with a table *a* to support the flask, and a lever *b* by means of which the plate *c* is lowered on the surface of the molding sand, pressing it into the flask. The illustration shows the sand being pressed into the drag *d*, which is placed over the patterns on a match board *e* on the table *a* of the machine. After pressing the sand in the drag, the presser head *c* is thrown back, the mold turned over, the match board removed, parting sand applied, and the cope *g* placed over the drag *d*. The sand is then pressed in the cope in the same manner as described for the drag. The presser head is then thrown back out of the way, the sprue is cut, and the pattern wrapped by striking against a pin that is held in the left hand so as to stand in the sprue with the lower end in contact with the pattern;

after which the flask is separated, the pattern withdrawn, and the mold placed on the floor to be poured. The power is applied to the lever *b* by the operator simply straightening his arm and putting his weight on it, pressing every mold alike, and with little care or judgment on his part. The ratio of the leverage being 30 to 1, a 135-pound man will exert a pressure of 2 tons on the mold without much muscular effort.

FIG. 3.

The shelves *h* are used for holding brushes, sprue cutters, and a box *i* of parting sand, and the upper shelf especially for holding the match or presser boards. The table *j* is necessary to hold parts of a flask, or molds, or the match boards, etc.

This type of molding machine is suitable for flasks not over 24 inches in length, 18 inches in width, and 10 inches in depth. It is also portable, being easily moved about the foundry floor on the rollers *k*, *k*.

6. Another form of mold presser is shown in Fig. 4. In the machines illustrated in Figs. 2 and 3 the presser head is lowered on the sand, while in the machine illustrated in Fig. 4 the sand is compressed in the flask between the presser head *a* and the table *b* by the vertical movement of the table; this operation is performed by means of the lever *c* turning the shaft that carries the eccentrics *d*, *d* and thus lifts the rods *e*, *e* that support the table *b*. The height of the

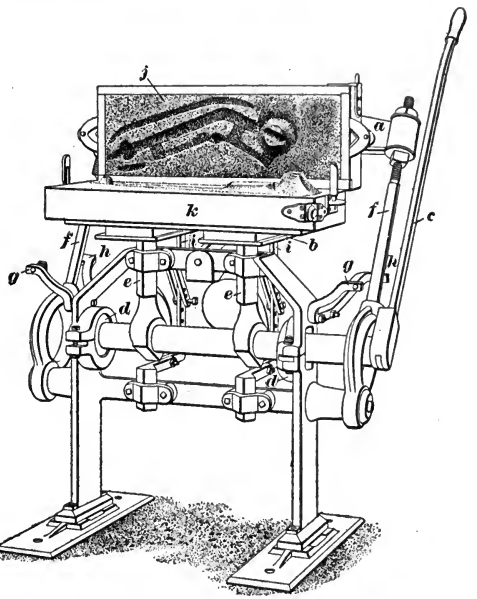

FIG. 4.

presser head is adjusted by means of the thread and nuts on the upper ends of the side rods *f*, *f*. The stops *g*, *g* determine the position of the side rods *f*, *f* to bring the presser head over the mold, and the stops *h*, *h* support the rods when the presser head *a* is thrown back so that the mold can be opened. Two brackets *i*, *i* support a shelf at the rear of the table *b* for holding the cope *j* when the mold is opened to remove the pattern, as shown in the illustration; the presser head *a* moves back far enough to give ample room

for the cope to rest edgewise on the table back of the drag *k*. The pattern in the mold shown is for a gas burner for a stove.

7. Capacity of a Molding Machine.—The capacity of a machine depends on the size of the flask used, the amount of sand to be handled, the condition and the shape of the patterns, the exertion required to operate the machine, and the distance to which the finished molds must be carried.

With stationary molding machines and no mold conveyer, considerable time and labor is consumed in placing the finished flasks on the molding floor. Assuming that each molder completes 200 14″ × 14″ flasks and places them in four parallel rows with a space of 3 inches between them, with 5 feet between the machine and the nearest flask, the last flasks will be located about 76 feet from the machine. This will necessitate the carrying of each flask an average of about 40 feet, or the total travel is equal to carrying a single flask over a distance of 8,000 feet.

8. Portable Molding Machines.—Under the conditions mentioned, the portable type of machine is preferable, as it is easily moved from end to end of the molding floor. Some portable machines have grooved wheels, which allow them to be run on tracks laid on the foundry floor. The molding sand for portable-machine work is piled up in long heaps on one side of the tracks, or between the legs of the machine, and the bottom boards and the empty flasks are arranged on the other side. The molding operation commences at one end of the floor; the finished molds are placed where the sand heap was located at the beginning of the molding operation, that is, where it was cut up, mixed, and tempered for the following heat. The portable machine becomes especially serviceable when the shape of the pattern is such that the whole mold cannot be made on one machine. In such cases two machines are used; the drag is finished with one and the cope with the other, the work being done by different operators. The first operator places the drag on the bottom board upon the molding floor, where cores may be inserted if necessary, and the second operator follows with the cope

and closes the mold. This method generally requires about double the amount of labor for handling the molds.

9. Machines for Drawing Patterns. — Some founders consider the withdrawal of the patterns from the sand one of the expensive molding operations, as it requires considerable time, and often, by the ordinary methods, both the pattern and the mold are injured. Machines have therefore been made for the purpose of handling the patterns more economically than can be done by hand.

A machine for withdrawing the patterns from the molds mechanically by means of a vacuum cup is shown in Fig. 5. A frame hinged to a post at *a*, *a* carries a metal tube with a rubber cup-shaped suction disk *c* at its lower end. The tube is supported by means of a cord *d* passing over a pulley *e* in the upper arm *b* and attached to a counterweight *f*. A rubber tube *g* connects the upper end of the vertical metal tube, attached to the disk *c*, to a vacuum pump. The method of operation consists in bringing the disk *c* into contact with the pattern in the flask *h* by means of the hand lever *i*. The patterns are usually attached to a mold board *k* unless they have sufficiently large flat surfaces to which the suction disk may be attached. A vacuum is established in the cup *c* by operating either of the foot-levers *j*. The lever may operate a foot-power vacuum pump, or the

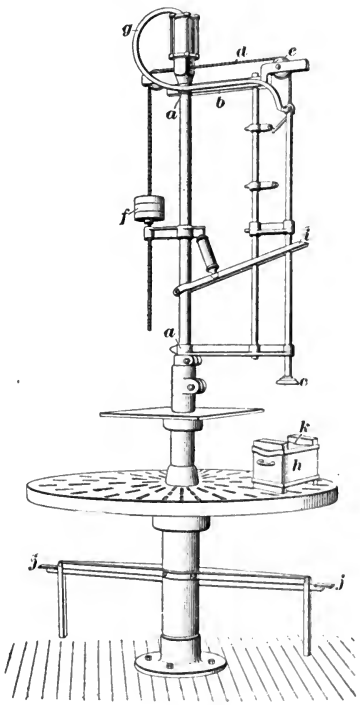

FIG. 5.

machine may be arranged so that connection is made by means of a valve to a power-operated pump. When the hand lever *t* is raised the pattern is lifted vertically from the mold by means of the vacuum between the disk and the pattern. The machine will draw deep patterns as quickly as shallow ones, and the drawing operation is *upwards* from the sand; this obviates some of the disadvantages experienced when patterns are withdrawn *downwards* from the sand, such as the use of nails and gaggers and the necessity of much swabbing and patching of the mold.

10. Stripping-Plate Molding Machine.—In this style of machines the patterns are withdrawn mechanically by stripping them through a plate having openings that

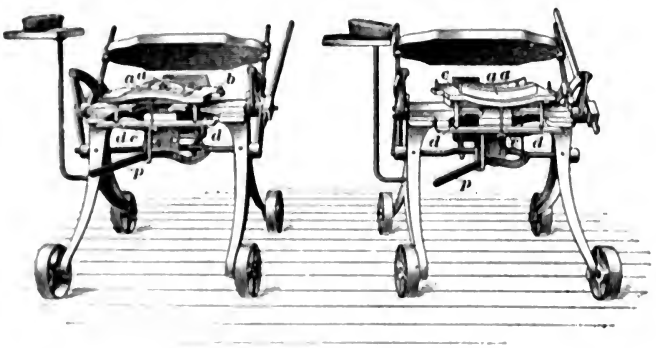

FIG. 6.

exactly conform to the outline of the patterns. Fig. 6 illustrates a pair of molding machines equipped with stripping-plate patterns *a* for brake shoes. Fig. 7 (*a*) and (*b*) show the arrangement of the patterns *a* in the stripping plate *b*, Fig. 7 (*a*) being the stripping plate for the cope, and *c*, Fig. 7 (*b*) the stripping plate for the drag. Details of the pattern are shown at *a'*, *a'*, Fig. 7. The patterns are drawn from the sand by raising the stripping plates *b* and *c* with the mold from the patterns that remain fixed on the machine tables. The pattern plates to which the patterns are

fastened on the machine tables, and also the flasks, have irregular parting lines to fit the curved stripping plates. The pattern plates in these machines rest firmly on and are

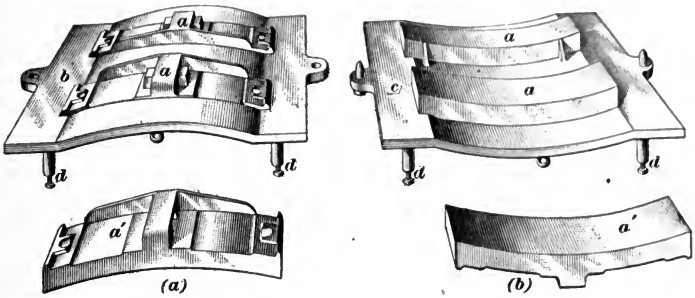

FIG. 7.

attached to the stationary part of the frame of the machine, and the stripping plates *b* and *c*, shown in Fig. 6, rest on the pattern plates, and are raised by means of four legs *d* that rest on the lifting table *e*; the table *e* is raised by means of a lever *p*. Owing to the fact that some parts of the patterns extend a considerable distance above the parting line, it is not possible to obtain a solid mold by pressing the sand

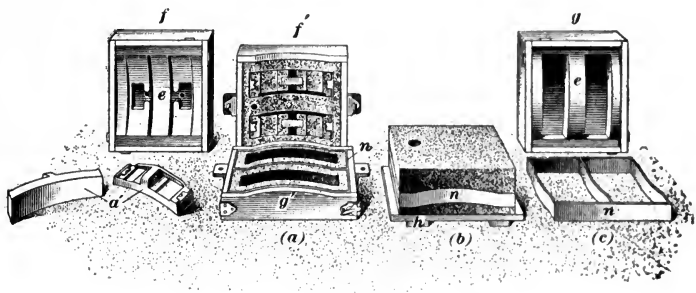

FIG. 8.

with a flat surface. On this account especially shaped presser heads *e*, Fig. 8, are used to press the sand between the patterns in the cope *f* and drag *g*, as shown in (*a*) and (*c*).

These heads press the sand between the patterns and insure even ramming of the entire mold. After the parts of the flask are rammed in this manner, the presser heads *e* are removed, the flask struck off, and the lifting levers *p*, shown in Fig. 6, raised, which lift the stripping plates *b* and *c* and the molds off the patterns *a*. In Fig. 8 (*a*) is shown a finished cope *f'* and drag *g'* before closing. Fig. 8 (*b*) shows a complete mold on a bottom board *h*, and Fig. 8 (*c*) shows a band *n* that is inserted in the cope portion of the flask before ramming. After the snap flask has been removed, the band *n* remains in the mold, as shown in Fig. 8 (*b*), and holds the mold together against the pressure of the fluid iron.

11. Molding Machine Without Stripping Plate. A machine with a pattern plate, but without a stripping

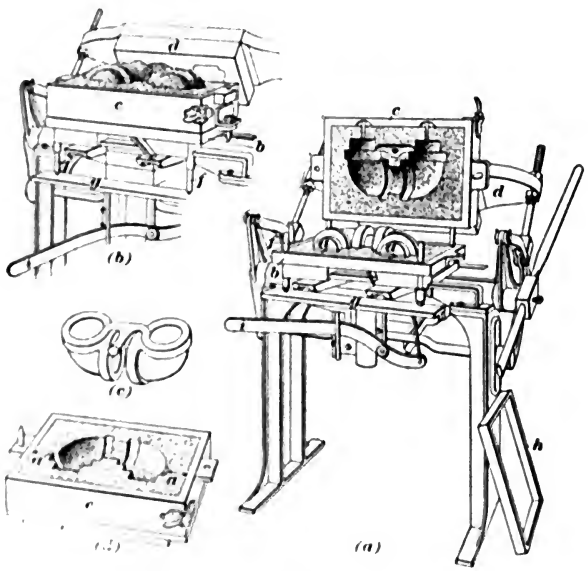

FIG. 9.

plate, is shown in Fig. 9 (*a*) and (*b*). The half patterns *a*, *a* for the two cast elbows, which are shown connected by the gate as they come from the mold in Fig. 9 (*c*), are shown on

the pattern plate *b*, which is fastened to the table of the machine. In this case, the impressions made in the sand of the cope and the drag are alike. In order that the two parts of the mold may fit accurately together, it is necessary that the patterns be so arranged on the pattern board that the distances *a*, *a'* from the edges of the pattern to the ends of the flask, shown in Fig. 9 (*d*), be the same. When the two parts of the pattern are very unlike, or when it is necessary to pour the mold with a certain side up, two machines are used, one having the patterns for the cope, and the other those for the drag. In Fig. 9 (*b*) is shown the cope *c* after having been pressed with the presser head *d*, the under side of which conforms to the shape of the patterns, and leaves the extra sand *e* on top of the cope. This gives approximately the same depth of sand at all points of the mold and so insures even ramming. The conforming presser head is used in the case of deep patterns. Before filling the flask with sand, a sand frame *h*, shown in Fig. 9 (*a*), is placed on top of the flask, which increases the depth of the flask enough to hold the additional sand necessary to fill the flask when the bottom board and presser head are forced in. The extra sand *e* is struck off before the flask is lifted from the machine. The flask is lifted from the patterns by means of four pins *f*, one at each corner of the pattern plate, whose lower ends rest on the lifting table *g*. The pins move vertically through sleeves in the pattern plate *b*, and lift the flask from the patterns when the lifting lever *i* is raised, as shown in Fig. 9 (*a*).

If the patterns require jarring when the flask is being lifted, the pattern plate is lifted with a projection at the right-hand corner, and this is rapped by a bar held in the right hand of the operator, while he lifts the lever *i* with his left hand.

12. Pneumatic-Power Molding Machine. — Several forms of mold-press machines are arranged to operate by means of compressed air, one of which is shown in Figs. 10 and 11. In this machine the table *a* is attached to

a cylinder *b* that slides over a stationary plunger *c*. The table *b* moves upwards when compressed air is admitted to the cylinder, and presses the sand in the flask *d* between the table and the presser head. In the illustrations, the presser head *e* is shown tilted back to enable the flask to be put in position or removed. An air pressure of about 75 pounds

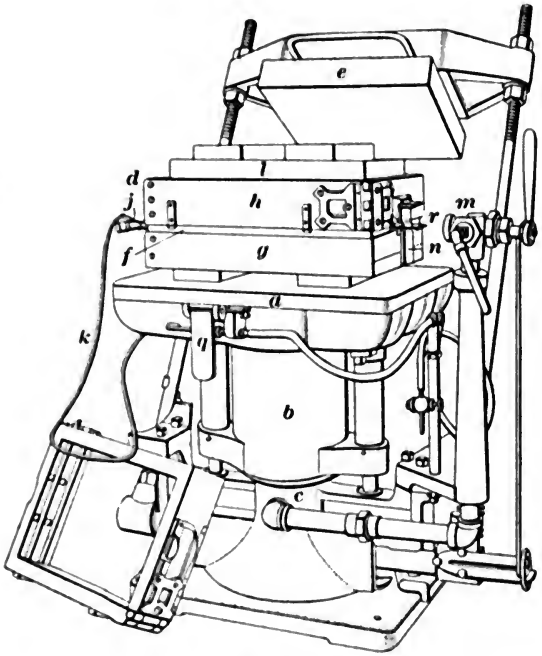

FIG. 10.

per square inch is used. The ordinary solid and gated patterns are made available for use on this machine by attaching them to a vibrator frame *f*. The vibrator frame is shown in detail in Fig. 12. This frame is placed between the match *g* and drag *h*, as shown in Fig. 10, while making the drag, and between the cope *i* and drag *h*, as shown in Fig. 11, while making the cope. The vibrator *j*, which is

attached to the corner of the frame, as shown in Figs. 10 and 12, consists of a small valveless plunger arranged to vibrate back and forth between two hardened anvils in a cylinder. When compressed air is supplied to the vibrator by means of the hose *k*, Figs. 10 and 11, its action sets up a sharp tremor in the frame and the patterns attached to it,

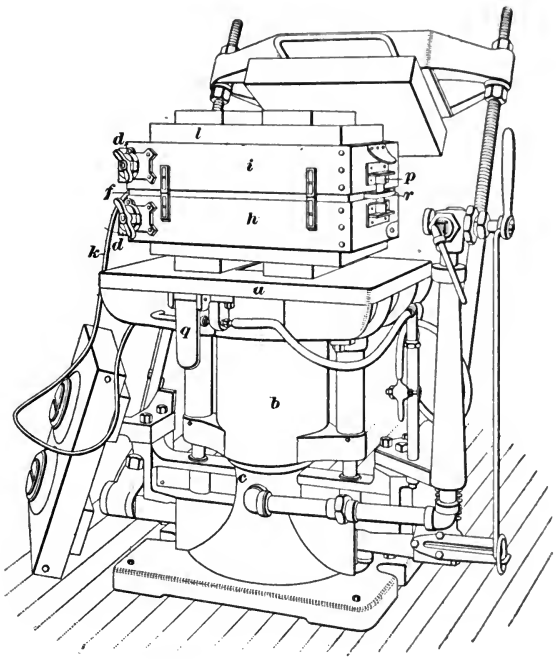

FIG. 11.

and the patterns are lifted from the sand without hand rapping. To operate the machine, the match *g* with the vibrator frame *f* and patterns are laid on the machine table *a*. The drag *h* is placed in position, filled with sand and pressed. To press the sand, the presser board *l* is placed on the drag, the presser head *e* is swung over the table, and the air admitted to the cylinder by means of the three-way cock *m*.

After ramming the mold, the air is exhausted from the cylinder and the table lowers by gravity; the presser head is pushed back and the match and drag rolled over on the table by hand in the usual way; the match is removed,

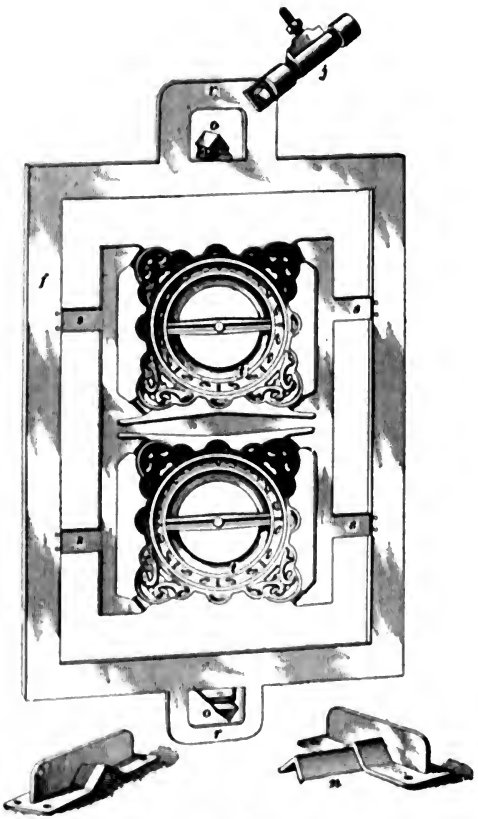

FIG. 12.

parting sand applied to the face of the mold in the drag, and the cope placed in position, filled with sand and pressed by the machine in the same manner as described for the drag. Snap flasks are generally used, though interchangeable solid

iron flasks can be adapted to the machine. In order that the different parts of the flask and the vibrator frame may come together accurately in forming the mold, special V-shaped pins *n* and *o*, shown in Fig. 12, are used. The drag pins *n* slide over the vibrator frame pins *o*, and enter the sockets *p* of the cope. After ramming the cope, the presser head is thrown back and the flask left in position for the cope to be removed. The sprue is cut either by hand in the usual way, or in some cases automatically by means of sprue cutters attached to the presser head. A lever *q* under the edge of the table *a* admits air to the vibrator. When the operator grasps the cope with his hands, he presses the lever *q* with his left knee and the cope is lifted while the vibrator is running; the vibrator is also operated while the frame is being lifted off, the lifting being done by means of its two handles *r*, *r*. The patterns are guided vertically from the sand by means of the V-shaped pins *o*, attached to the frame shown in Fig. 12, and can be easily and accurately replaced in the mold if necessary. The prints in the mold made by the bars *s*, *s*, etc., which are used to attach the patterns *t* to the frame, as shown in Fig. 12, must be filled with sand before the flask is closed and poured, unless they are used as core prints and closed by the cores.

13. Automatic Molding Machine.—In Fig. 13 is shown an automatic molding machine designed to perform mechanically the various operations in making molds by means of flasks and match boards. The machine is operated by means of a counterbalanced hand lever *a* that lifts the table *b*, with the flask *c* lying on it, against the presser head, thus pressing the sand into the flask. The machine has a turret top, composed of three parts, which revolves on a shaft *d* carried by the side rods *e*, *e*. The pattern plate *f* is attached to a system of levers so that it can be moved horizontally and held either in the flask centrally over the table, as shown in (*b*), (*d*), and (*e*), or to the rear of the flask. The flasks are either of wood or iron, and are made with solid corners. They are made tapering so as to be

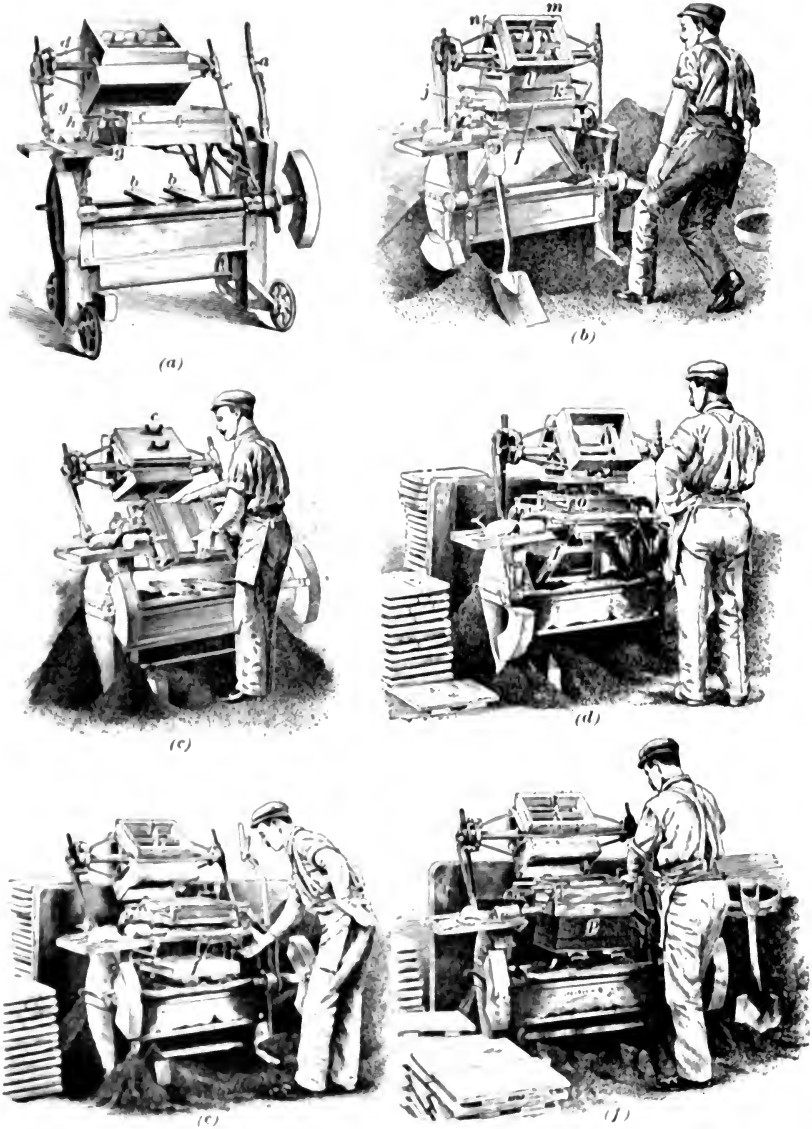

FIG. 13

easily lifted from the molds, and have movable ribs for holding the sand in the mold. The ribs are withdrawn flush inside the flask, and at the same time the two parts of the flask are locked together, when the mold is completed and ready for the flask to be removed. The flask is held in place on the machine by means of pins *g* engaging a frame *h*. The pattern plate *f* is clamped to a frame *i*, as shown in Fig. 14,

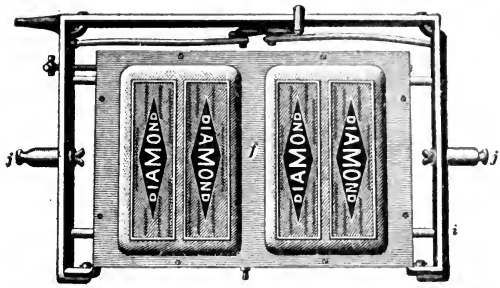

FIG. 14.

and is supported on the machine by means of the trunnions *j*, *j*, as shown in Fig. 13 (*b*) and Fig. 14. To operate the machine, the frame with pattern plate is placed between the two parts of the flask on the table, the drag *k* being on top, as shown in Fig. 13 (*b*). The drag is filled with sand, and the peening frame *l* on the turret top is pressed into it. The flask is lowered and the surplus sand struck off; a bottom board is placed on, and the flask revolved by hand, as shown in (*c*). The cope is then filled with sand and the cope peening head *m* pressed into it; the surplus sand is struck off, and the presser head *n* automatically applied, thus pressing both cope and drag in one operation; the presser head enters the top of the cope and the bottom board is forced into the drag. Sprue cutters may be attached to the presser board, or flat gates *o* can be placed on the pattern, just before the cope is filled with sand, and are withdrawn by the head automatically, as shown in (*d*). The flask is then separated as shown in (*e*) and the pattern plate *f* passed to the rear. In (*e*) the operator is just removing the pattern board from the cope to pass it to the rear of the mold. The two halves

of the flask are then brought together and the bottom board lowered with the complete mold *p* on the table, as shown in (*f*). The mold is then placed on the floor ready to be poured. A shelf attached to the left side of the machine holds a brush, wooden mallet, and other necessary tools, and a sack of parting sand or facing. The machine is made to run on a track.

14. Molding Machine Without Rammer. — Fig. 15 (*a*) and (*b*) shows a pair of stripping-plate machines

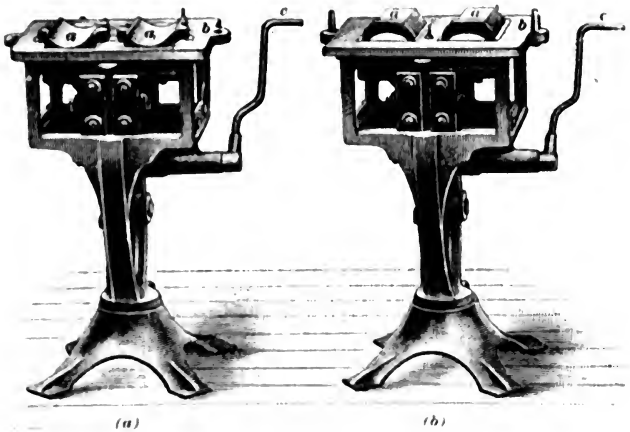

FIG. 15.

that do not ram the molds, this operation having to be performed by hand or by means of some mechanical device that is entirely separate from the machine. The machines are shown equipped with patterns *a* for railway-car journal bearings. The stripping plates *b*, *b* rest on the top of the frame of the machines. The patterns *a*, *a* on each machine are attached to a frame that has a vertical motion controlled by means of the crank *c*. The drag is placed over the patterns *a* on the machine shown in Fig. 15 (*a*) and rammed up, and in the same manner the cope is prepared on the machine shown in Fig. 15 (*b*). The patterns in each case are drawn downwards from the sand through the

stripping plates *b*, *b* by a suitable movement of the crank *c*. The two finished halves of the mold are then lifted from the machines, put together, and placed on the floor ready for pouring.

Such machines are made in a great variety of forms. By applying different draw-plates and stripping plates, these machines may be used for a large variety of work. The machines shown in the illustration are portable, being moved either by hand or by means of cranes.

15. Match Plates With Movable Patterns. There is a class of patterns having projections that make their withdrawal from the sand impossible without extra operations. This form of casting can generally be made in large quantities and with facility, either by hand in the usual way or on a molding machine, by making either the whole or a part of the pattern movable on a match plate. An example of a pattern of this class mounted on a suitable match board is shown in Fig. 16 (*a*), and the casting in Fig. 16 (*b*).

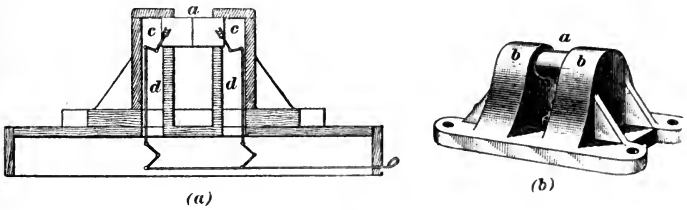

FIG. 16.

It is impossible to withdraw this pattern from the sand if the part *a* is made in one piece with the standards *b*, *b*. It may, however, be molded successfully by making the pattern for the standards hollow and dividing the pin *a* in the middle of its length, as shown in Fig. 16 (*a*). By making the two parts of the pin movable, they can be pulled backwards into the recesses *c*, *c* by means of the rods *d*, *d*, and the pattern easily withdrawn from the sand.

A stripping plate arranged with two sets of movable patterns for sheaves is shown in Fig. 17. This method is adapted to molding circular and symmetrical castings, such

as wheels, sheaves, pulleys, disks, etc., having projecting parts that prevent the patterns being withdrawn in the usual way from the sand. A half pattern is necessary, the divisions being made along a diameter. The half patterns *a*, *a*, etc. are attached to rods *b*, *b*, and arranged on the stripping plate *f* so that the diameter of the patterns coincide with

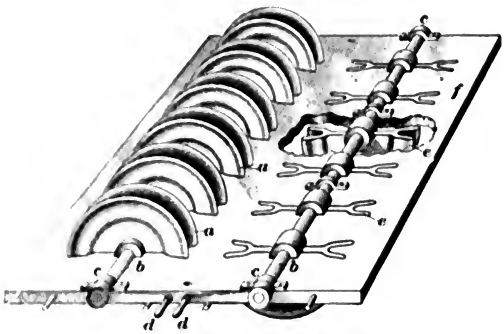

FIG. 17.

the surface of the plate. The openings in the stripping plate conform with the diametral section outline of the patterns. The rod is fastened to the plate by means of the bearings *c*, *c*. The drag is placed over the patterns and rammed up, and the patterns withdrawn through the plate by turning the cranks *d*, *d* on the ends of the rods. The illustration shows one set *e* of the patterns withdrawn. In like manner the cope is prepared, after which the two parts of the flask are fitted together and poured.

16. Match Boards With Removable Parts of Pattern.—An example of match-board molding in which part of the pattern is removable is shown in Fig. 18. The completed casting, a chain wheel of a pump, is shown in Fig. 18 (*a*), and the pattern *a*, match board *b*, bottom board *c*, and completed mold *d*, are shown in Fig. 18 (*b*). The pattern is made of brass, with the prongs *e*, *e* on one side removable and fitted with pins *f* in the usual way.

The solid part of the pattern is recessed into the match board to the parting line, as shown at *h*.

In making the mold, the complete pattern is fitted to the match board *b*, the loose parts being uppermost, and laid on the bottom board *c*, as shown. The cope is then placed over the match board and rammed up, turned over, and the match board lifted off, leaving the pattern in the cope; parting sand is put on the face of the mold in the cope, and the drag

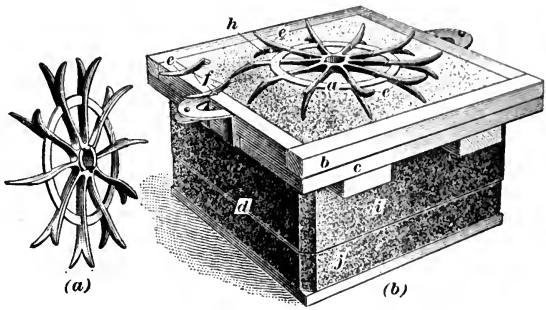

FIG. 18.

put on and rammed up. The mold is reversed and the cope with the detachable prongs *e* of the pattern lifted off; these prongs are then picked out by hand. The solid part of the pattern is removed from the drag, the two parts of the mold *i* and *j* placed together, and the snap flask removed, as shown in the illustration. The molds are made at the rate of one in 4 minutes for castings weighing about $2\frac{1}{2}$ pounds each.

17. Match Boards.—Match boards are made of wood, plaster of Paris, metal, or composition. When only a few castings are to be made, the molder will usually make the match of molding sand. Wooden match boards are often used, but they are expensive when the joint line is very irregular. Plaster of Paris is a material that is easily prepared and molded into match boards, but it is brittle and easily broken, will not bend, and cannot be repaired. Composition boards made of sand, boiled linseed oil, and litharge

are the cheapest and best. They are hard, tough, and elastic, not liable to shrink, swell, or crack, and repairs or alterations are easily made. The composition is made by tempering either parting or fine molding sand with boiled linseed oil and litharge to the right consistency for molding, as found by experience. After molding the match board, it is dried by means of a gentle heat in the core oven while still in contact with the pattern. By adding from two to three tablespoonfuls of litharge to each pint of oil, the drying is facilitated. The usual time required to dry a match board 1 inch thick is 12 hours.

18. Example of Multiple Molding.—The method of molding a lock tumbler, shown in full size in Fig. 19, is illustrated in Fig. 20. The tumblers weigh 3¼ pounds per hundred, and 56 are made in each mold. The molds may be rammed by hand or pressed, as in this case, in a machine; by the latter method the complete molds can be made at the rate of about 20 per hour. In Fig. 20 (*a*) is shown the arrangement of the bottom board *a*, match board *b*, two sets, or cards, of patterns *c*, and drag *d*, ready for the sand. The card patterns *c* are made of brass, and those for 28 tumblers are united to one gate runner *e*, as shown in (*a*), (*c*), and (*e*). The match board is of sand composition, as described in Art. **17.** In (*b*) is shown the drag after being rammed up; and (*c*) shows the drag turned over, the bottom and match boards removed, and the cope *g* in place. In (*d*) is shown the cope *g* rammed up with the sprues *h*, *h* for two cards of patterns; and (*e*) shows the flask opened for the purpose of drawing the card patterns *c*, *c*, these being drawn from the drag by means of the pins *i*, *i*, etc., shown in (*a*). In (*f*) is shown the completed mold on the bottom board *a*, with the snap flask removed, and ready for pouring.

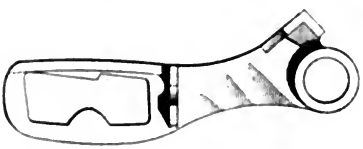

FIG. 19.

19. Gear-Molding Machines.—Gear-molding machines are used to make the molds for the teeth of gears.

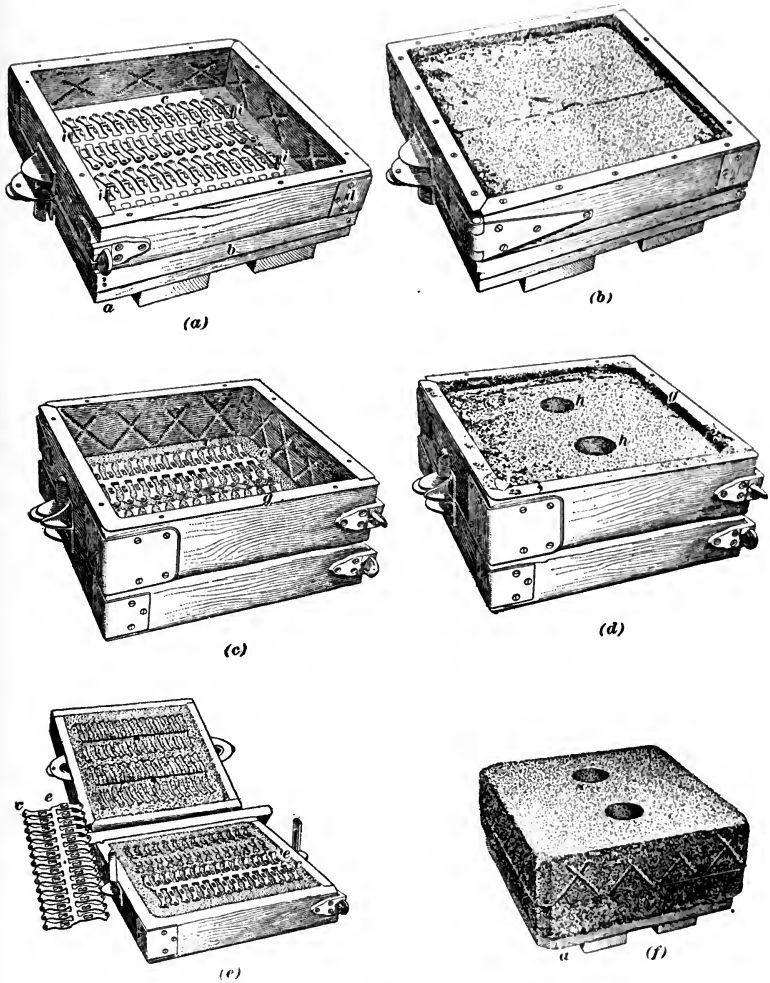

FIG. 20.

Fig. 21 shows one type of machine for this purpose, which is suitable for gears of the largest diameters. The base of

the machine rests on the bottom of the mold and supports a vertical column *a* in the center. This column carries an arm *b*, which revolves on the column *a*; it also has a horizontal movement and adjustment by means of the wheel *c* and a rack, and carries an indexing mechanism at one end. A vertically adjustable arm *d* carries at its lower end a pattern *e* for one or two teeth of the gear. The pattern is lowered to the required position for making the mold, and

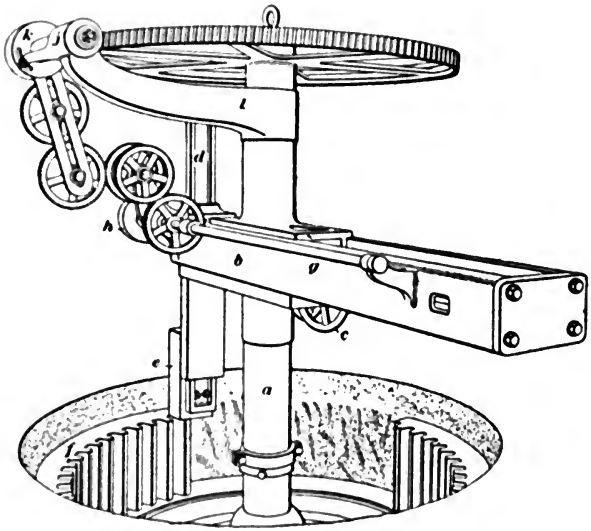

FIG. 21.

the length of the revolving arm *b* adjusted to give the diameter of the gear desired. The sand is rammed against the face of the pattern, as shown at *f*. The pattern is then withdrawn vertically from the mold, and the arm *b* supporting the pattern rotated forwards by means of the indexing mechanism the exact distance of another tooth or set of teeth, and the pattern lowered and the ramming process repeated. The indexing mechanism consists of a train of gears interposed between the shaft *g*, which is operated by a crank

revolving on the face of the index plate *h*, and the large stationary gear attached to the top of the column *a*. A worm in the case *j* meshes with the large gear and carries a gear on the end of its shaft in the case *k*, which receives motion from the train of gears extending to the shaft *g*. The arrangement is such that by revolving the shaft *g* by means of the crank, the arms *l* and *b*, which are attached together, are revolved on the column *a*. The index in each case must be set to divide the circumference of the gear into the number of equal parts to correspond with the number of settings required. The arms, ribs, and hubs of the gears are made with the aid of special patterns and placed in the molds after the machine has been removed.

A style of gear-molding machine suitable for smaller gears is shown in Fig. 22. The machine is mounted on a bedplate, and is stationary. It consists of a vertical column *a* carrying a revolving arm *b* that supports the pattern *c* for one or

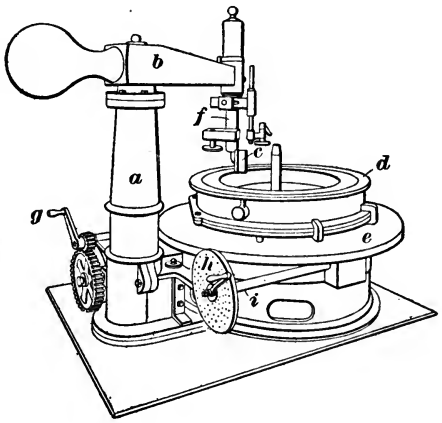

FIG. 22.

more teeth of the gear. The mold is prepared in a circular metal flask *d* resting on a revolving table *c*. After the pattern *c* has been placed in the mold and rammed up and withdrawn vertically, either by means of the slide *f* or the crank *g*, which operates a rack and raises or lowers the column *a*,

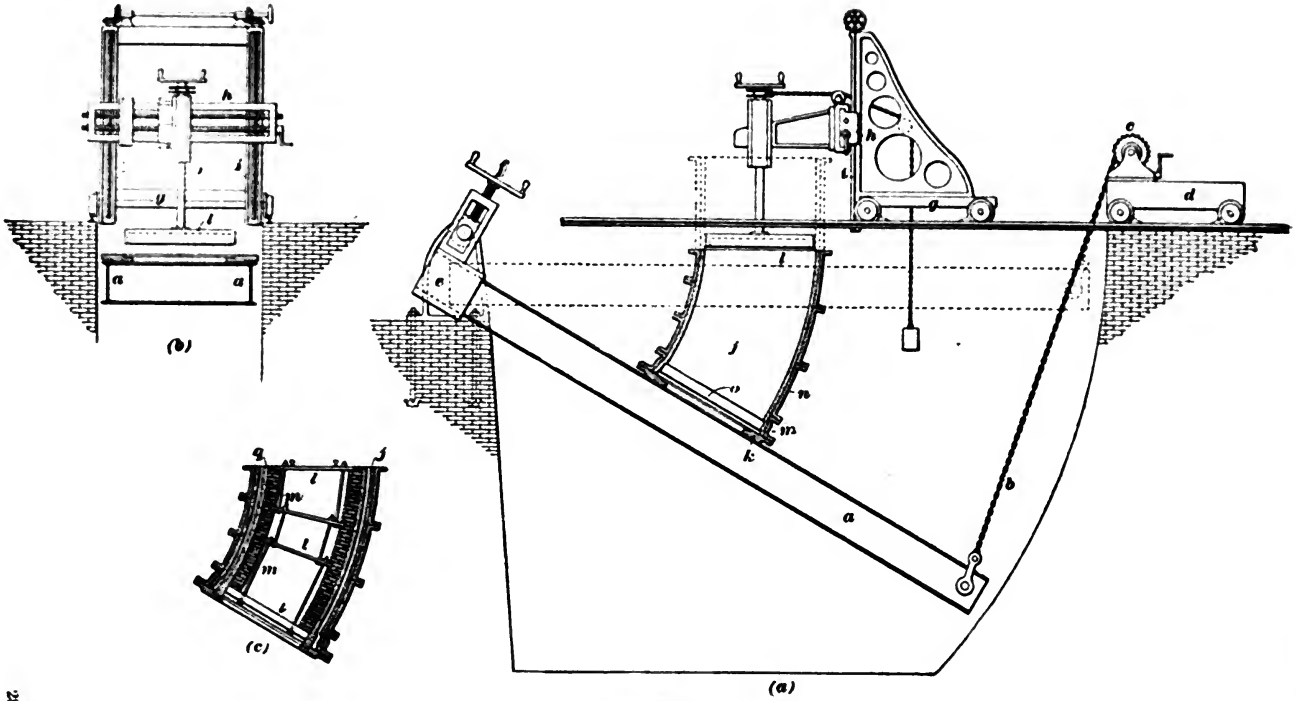

FIG. 23.

the mold is revolved the exact distance necessary to form the next tooth by means of the crank *h* of an indexing mechanism. The crank *h* is attached to the shaft *i*, which has a worm at the inner end that meshes with a rack on the under surface of the table *e*.

20. Molding Machine for Curved Pipes.—Fig. 23 (*a*) and (*b*) shows a design of molding machine for making curved pipes, which requires neither patterns nor core boxes, and has a capacity for making curved pipes up to 20 inches in diameter and of any desired curvature up to 50 feet radius and 60° in length. The machine consists of a frame *a* made of **I** beams, as shown in (*b*), which is hinged at one end so as to swing into a pit. The movable end of the frame is supported by a chain *b* whose length is controlled by means of a winch *c* on a car *d* that runs on tracks extending from the floor across the pit. The length of the frame *a* may be changed by sliding it through sleeves *e* that support it at the hinged end. The sleeves *e* have a vertical adjustment by means of a screw and hand wheel *f* attached to the bearing. A truck *g*, shown in Fig. 23 (*a*) and (*b*), runs on tracks over the pit and carries a cross-bar *h*, that has a vertical movement along two side posts *i*, *i* standing on the truck. The mold *j* for the curved pipe is started on a bottom plate *k* fastened on the frame *a* when it is horizontal, and the socket *o* is swept up by hand by the aid of a sweep *l* supported by the bar. After the socket is finished, the pattern *l* is used for the curved part. As the mold progresses, the frame *a* is gradually lowered at one end into the pit by means of the winch *c*. The flange or socket portion *m* of the flask is bolted to the bottom plate *k* and a section *n* of the flask bolted to the flange. The flask is made in several sections to facilitate ramming. As the ramming proceeds, the end of the frame is lowered by means of the winch, thus giving a mold of uniform curvature. The ends of the mold may be made straight by holding the frame *a* stationary and continuing the work by a vertical movement of the sweep or pattern *l*.

The core q for the mold j, as shown in Fig. 23 (c), is also formed on the frame a, but a ring is used for a sweep on the machine, instead of the disk l. The core is strengthened at the top and bottom and at suitable intervals by iron plates l that are bound together by iron rods m.

21. Machine for Molding Plowshares.—A machine for molding plowshares is shown in Fig. 24. Its construction is a radical departure from that adopted in other molding machines. The working parts of the machine operate hori-

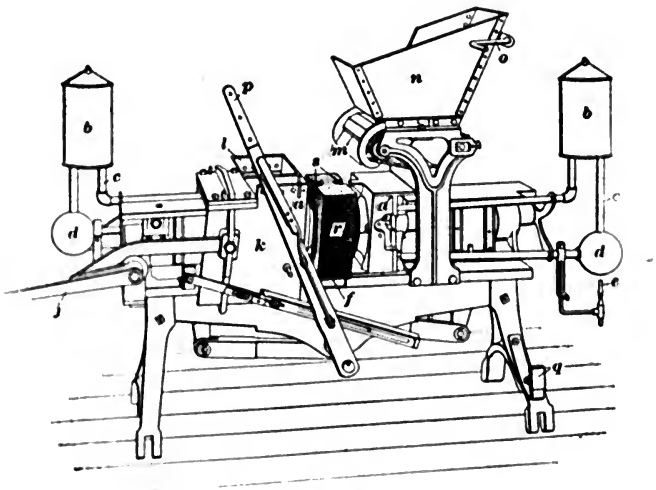

FIG. 24.

zontally. No flasks are used in forming or in handling the molds. The impressions in the sand are not made by patterns, but by specially shaped plunger heads, or matrices, a, a'. A special heating arrangement, consisting of tanks b, pipes c, heaters d, and gas jets e, keeps up a circulation of hot water in the plunger heads and prevents the sand sticking to the matrices. Fig. 25 shows both sides of a mold for a plowshare made on the machine shown in Fig. 24. Each mold has on one side the impression of the pattern corresponding to the

cope and on the other side that of the drag, half of the pouring gate *s* being in each side. The sand rests on a bottom plate *f*, shown in Figs. 24, 25, and 26. The molds are supported on the plates *f* on the rails *h*, shown in Fig. 26, of the frame on which the molds are placed for pouring. A plate *f* is placed in the machine, and a chill *i*, shown in Figs. 25 and 26, is laid against the proper part of the matrix. The lever *j* is raised and the mold box *k* moved toward the stationary matrix *a'*, which the box *k* slightly overlaps, and forms a flask to enclose sufficient sand for the mold. The hopper *l* is then under the outlet *m* of the large hopper *n*, which is supplied with sand by means of a conveyer. The operator turns the crank *o* until sufficient sand has been deposited in the mold, and then compresses the sand by moving the lever *p* from the position shown in Fig. 24 until it strikes the stop *q* on the leg of the machine. By reversing the levers *p* and *j* to the position shown in Fig. 24, the mold *r* is left in a position to be lifted from the machine by means of the bottom plate *f* and carried on the sling *t* of a trolley to the frame, as shown in Fig. 26. The projection *u*, shown in Fig. 25, is removed from the molds in the first row so that they will set squarely against a vertical end board *w*, shown in Fig. 26. The second row of molds is then placed against the first, the grooves *g* of the bottom plates *f* fitting projections on the carriage *v* on the rails *h* and making the molds match each other perfectly. The carriage *v* slides on the rails *h* and is used to adjust the molds so that they will match properly. The other rows are then set in place until the frame is filled. A board is placed across the end of the last row, similar to the one across the first row, and clamped to the frame so as to hold all the rows of molds securely together. After the molds are clamped together, they are all poured.

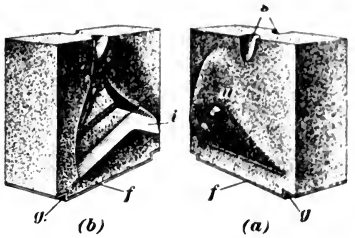

FIG. 25.

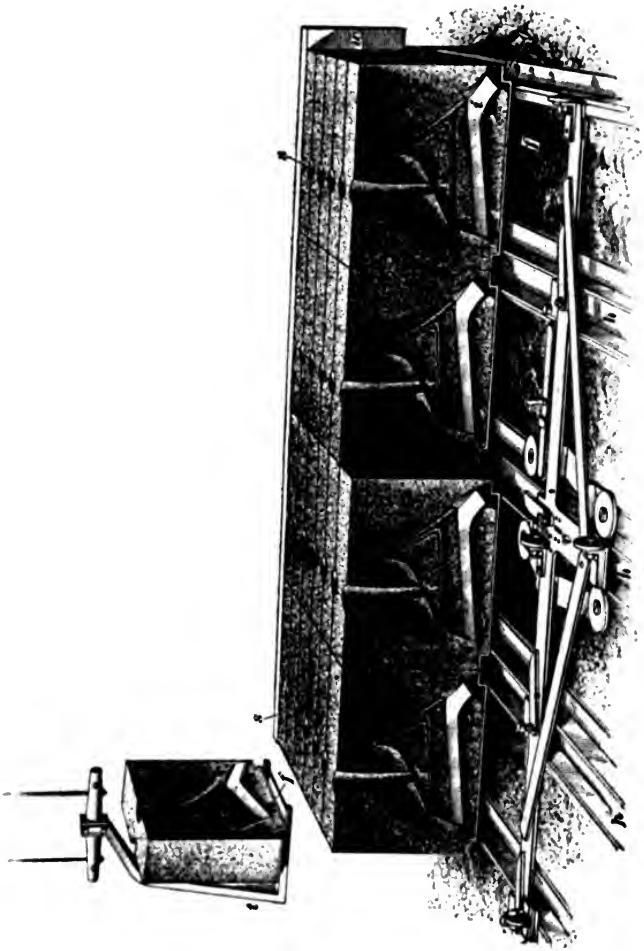

FIG. 36.

FOUNDRY APPLIANCES.

(PART 1.)

BUILDINGS, GROUNDS, AND EQUIPMENT.

BUILDINGS AND GROUNDS.

INTRODUCTION.

1. General Foundry Conditions.—It is impossible to lay down iron-clad rules prescribing the best arrangements and most suitable features for all foundries. The varying conditions imposed by competition in the matter of quality, quantity, and cost, and the nature of the work that comes within the scope of each individual plant, require that the methods adopted be those best suited to the plant under consideration; in many cases these methods will be very different. Equipments that give the best results in one case may prove failures in another. In giving the description of modern foundries and the various machines and systems that form a part of their equipment, it must be understood that much that is said is ideal in its nature. While the manufacturing foundry embraces the greatest number of the modern tendencies in founding operations, many of them apply to any foundry; but no two foundries have conditions exactly alike. From the many styles of buildings and the various appliances for foundry use, it is

COPYRIGHTED BY INTERNATIONAL TEXTBOOK COMPANY. ENTERED AT STATIONERS' HALL, LONDON

necessary to figure out and arrange in each case those most suitable for the specialty to be manufactured; so that the designing of a modern foundry requires considerable experience and good judgment on the part of the engineer in charge.

2. Foundry Branches.—The equipment and operation of a foundry will depend on whether its castings are made of steel, malleable iron, gray iron, black iron, white metal, etc. They also depend on whether light or heavy castings are made, and whether it is a specialty or jobbing foundry. *Jobbing foundries* produce a great variety of castings, while *specialty foundries* make nothing out of the regular line of work for which they were originally equipped. Some of the gray-iron specialties are castings for rolling mills and heavy machinery, chilled-iron rolls, pipe, car wheels, car and railway fittings, air brakes, light machinery and machine tools, pumps, gears and pulleys, agricultural machinery, stoves, hardware, fittings, ornamental and art castings, electrical supplies, hollow ware, etc. A large portion of the heaviest class of molding is done in loam, and the remainder in either green or dry sand.

GENERAL ARRANGEMENT.

3. Location. — Foundries are preferably located in manufacturing centers and where the best and most convenient shipping facilities are afforded. When selecting a site, it should be taken into consideration that all the raw materials, as well as the finished and waste products, have considerable bulk and weight, and should be hauled the shortest distances and handled the least number of times in order to curtail general expenses. Freight charges for pig iron, scrap, coke, sand, limestone, and other supplies add considerable to their first cost; and the transportation charges for castings and slag must be added to the cost of the castings to determine their selling price. The foundry should be located near the source of supply of the raw materials, and, if possible, near where the greatest part of the product is consumed and the waste can be disposed of

at the lowest cost. Good distributing points are on navigable waterways and at railway intersections. It is always advisable to locate the foundry so as to have the advantage of several competing railways, and to have both land and water shipping facilities. All parts of the works should be directly accessible by railways, with the necessary switches and sidings; adequate wharfs are required on the waterways, and both systems should be equipped with the best arrangements for loading and unloading. A foundry plant consists of one or more buildings and a stock yard.

4. Extensions.—It is advisable to erect the foundry buildings on a tract of land that will not only permit extensions to be made, but also has a suitable area for a dumping ground for refuse, slag, and burned sand. A dumping ground is a great convenience, as it allows the immediate and rapid disposal of the waste products, but often the interest on the investment in a dumping ground is greater than the freight charges that would remove the waste a considerable distance.

5. Modern Tendencies in Foundry Building. Modern foundry buildings are substantial structures of brick and stone, with a framework of steel. They have complete systems for heating, lighting, and ventilating; also lavatories, wash rooms, lunch rooms, and other minor conveniences. Traveling cranes run the entire length of the foundry floor and stock yard, and hoists and jib cranes are liberally distributed.

6. Light for Foundries.—The principal work in the foundry consists in preparing the molds, which involves the greatest skill, is the most expensive part of the process, and requires the closest attention and the largest portion of the space of the entire foundry plant. The nature of the work of a molder is such that, even in the brightest daylight, it is often necessary to use artificial light. In the old-fashioned shop a torch was indispensable, but these have now been replaced, to a considerable extent, by portable incandescent electric lamps.

There should be the best possible natural light over the entire foundry floor. This requires large side windows and numerous skylights; or the space over the molding floor may be roofed with corrugated glass, which admits plenty of light without the glaring effect of direct sunlight. Translucent fabrics, which consist of a wire cloth embedded in a translucent material, are also used for foundry roofs. Dark nooks and corners should be avoided. But in addition to this, the foundry floor requires artificial illumination several hours each day during the winter months and in cloudy weather. For such days, and for night work, enclosed arc and incandescent lamps give the best illumination.

7. Heat and Ventilation.—One of the greatest contrasts between the old and the new foundry buildings is in their systems for heating and ventilating. Plants for heating and refrigeration are now so arranged that pure air of an agreeable temperature is supplied to the working rooms at all seasons; also the dust and smoke caused by the casting operations are rapidly removed. The same system of pipes and registers serves to deliver warm air in winter and cool air in summer.

BUILDINGS.

8. Arrangement.—The **foundry buildings** comprise a cupola house, molding and core departments, engine room, and repair shop. Large establishments have, in addition to these, a pattern shop, a pattern storage house, machine, blacksmith, and carpenter shops; and a warehouse, shipping department, and a laboratory, which are usually connected with the office building. The erecting shop, warehouse, and the sorting and shipping departments may form an annex to the other building, but the operations in the two buildings should be kept entirely separate from each other. The pattern storage house should be a fireproof structure, either an isolated building or a specially

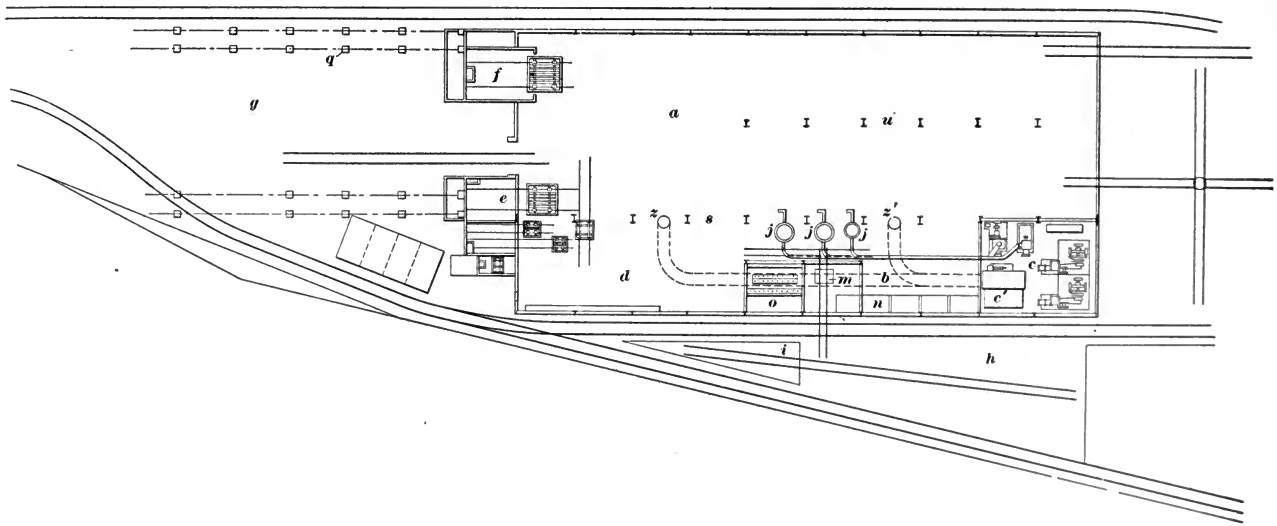

Fig. 1.

constructed room in one of the larger buildings. Special care should be taken of patterns used in founding, as they are generally the accumulation of many years of labor and invention, and cost a large amount of money. The loss of patterns in some cases would be irreparable. A convenient location for the pattern shop is between the molding department and the pattern storage house. The engine room, machine, and carpenter shops should be near one another, though if an electric system of power transmission is used, there may be some other convenient arrangement for them. The offices and laboratory adjoin each other and are best located in the front of the group of buildings, so as to make general access to the plant and its supervision as easy as possible.

9. Descriptions of Modern Foundry Buildings. While many foundries consist of only a single building, those doing extensive manufacturing have separate buildings for the different subdivisions of the work. In Fig. 1

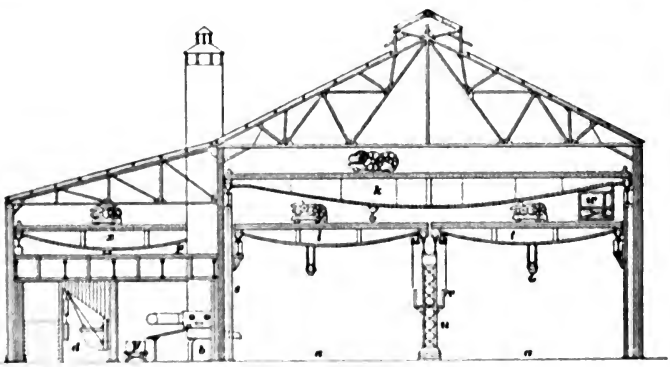

FIG. 2.

is shown the floor plan of a foundry building designed for making heavy castings, while a section across the building between the cupolas and the engine room is shown in Fig. 2. The molding floor *a*, Figs. 1 and 2, covers the main portion

of the building. In the lean-to are the cupola house *b*, engine room *c*, and core department *d*. The core ovens *e* and ovens *f* for drying molds are located at the end of the main building as annexes to it. As only heavy work is made in this foundry, the cleaning is done either on the floor *a* or in the yard *g*. The iron is stored in the yard at *h*, and the coke bins are at *i*, both being as near the cupolas as possible.

The three cupolas *j* are located in a row near one another, about the middle of one side of the molding floor. The melted iron flows from the cupolas into ladles, which are carried by either of the cranes *k* and *l* over the molding floor. The iron, coke, etc. for charging the cupolas are elevated to the charging platform for the cupolas by means of the hoist at *m*. The space *n* along the wall in the rear of the cupolas is used for bins for core and molding sands and for clay; the wash rooms *o* are also located near the cupolas. The hoist *m* for raising the iron, coke, etc. from the ground to the charging platform *p* is between the middle cupola and the wall. The large electrical traveling crane reaches entirely across the molding floor and is supported by runways that extend the full length of the building and also over the yard *g*; one of these cranes is shown at *k*. The foundations for the supports of the runways over the yard are shown at *q*. Along the cupola side of the building the track is supported on the row of columns *s*. Under the large crane *k* are two cranes *l* and *t* that are one-half its length. A central row of posts *u* extends down the molding floor for about half its length and supports the tracks for the inner end of each of the two shorter cranes *l* and *t*, which run under the large crane *k*. An elevated platform *v* on the row of posts *u* is used by the operator of the two small cranes, while the large crane is operated from an operator's cab *w* attached to it. A small crane *x* runs over the core department *d*. The slag and cinders are removed by means of a car *y* running on a track at the rear of the cupolas. The fan *c'* delivers fresh air to the foundry floor through the two conduits *z*, *z'*.

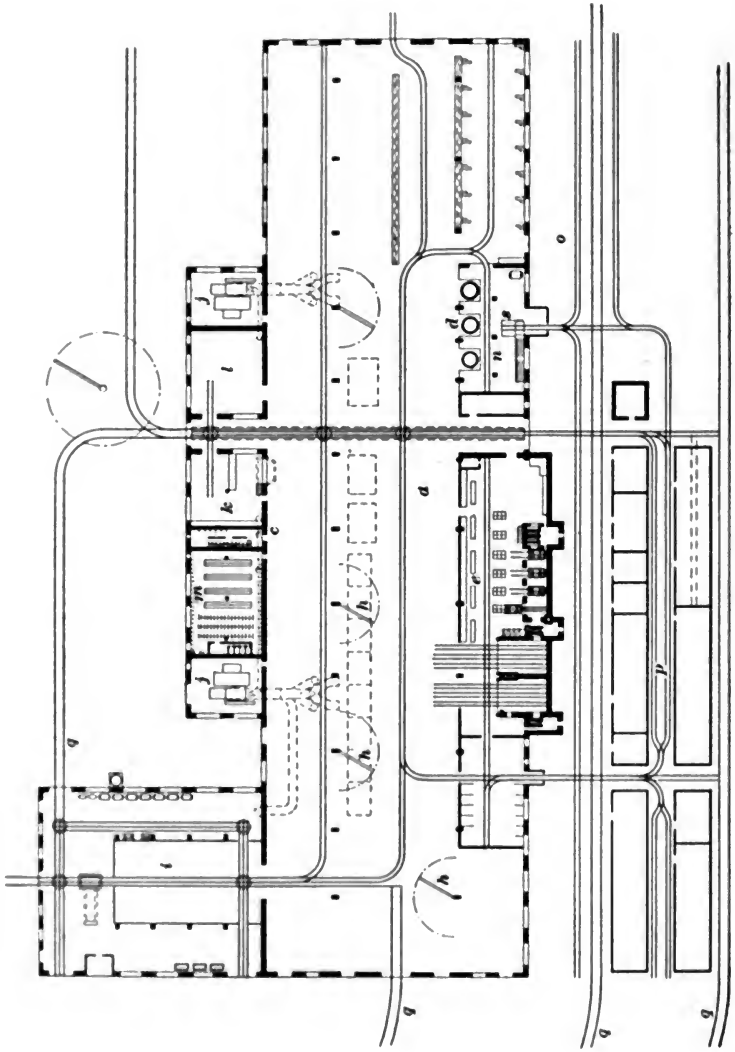

FIG. 3.

10. In Fig. 3 is shown the plan and in Fig. 4 a cross-section of a foundry building, which embraces not only the equipment necessary to nearly all small foundries but many appliances that are applicable to the manufacture of any of the classes of either light or heavy castings. The building consists of a main portion *a* with lean-tos *b*, *c* along each side, as shown in Fig. 4, these having various offsets and irregular shapes to provide the floor space necessary for the most convenient arrangement of the apparatus in the equipment. The cupolas *d* are located in the room *b* in a row along the side of the main molding floor; the core department *e* is located near the cupola room on the same side of the main floor. The building is lighted by large skylights in each roof and windows in the walls and gables, and in the space between the eaves of the main portion of the building and the top of the roof of the sheds. A large traveling crane *f*, Fig. 4, travels nearly the full length of the building, and a smaller traveling crane *g* is located in the lean-to *c*. Several jib cranes *h* operated by electric motors are located along the sides of the molding floor. These jib cranes are pivoted to the columns of the building in such a manner that they can be lifted off their supports and removed to other columns by means of the traveling crane. The cleaning department *i* is located in an annex at one corner of the building; and the heating and ventilating machinery *j*, *j*, the pattern room *k*, wood shop *l*, and lavatory and dressing rooms *m*, in additions against the lean-to *c*. The blower and air compressor are located on the second floor of the cupola room *n*. The yard *o* in the immediate vicinity of the cupolas is used for the storage of iron and coke, while that at *p* is occupied by sheds for the different kinds of sand and other molding materials. A narrow-gauge railway system extends throughout the whole plant, connecting the different departments and the stock yard with one another. Steam-road tracks *q*, *q* lead into the buildings and the stock yard. The stock is elevated to the charging platform *r* by means of a hoist *s* located at the rear of the cupolas.

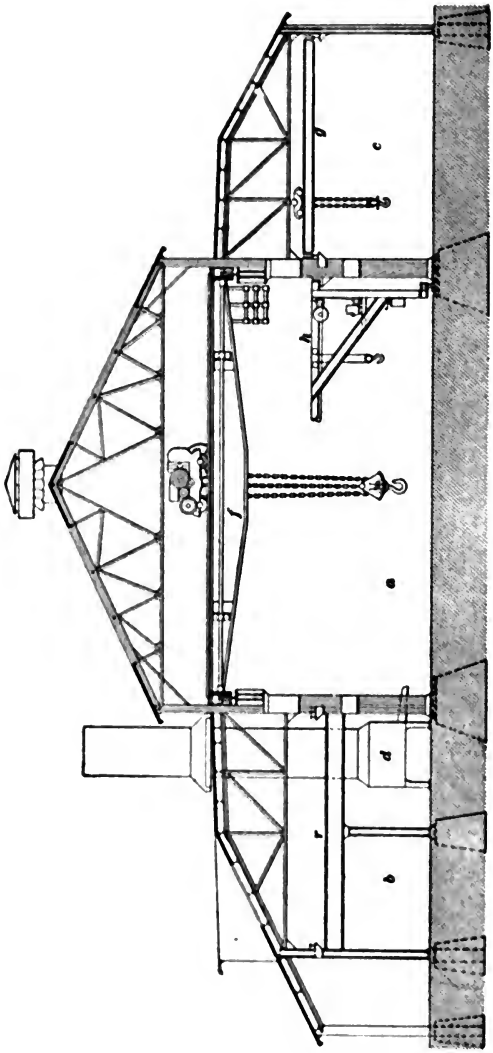

FIG. 4.

11. The **stock yard** is used for the storage of the various grades of pig iron, scrap iron, sprues, and coke; it should have bins and sheds for molding sand, firebrick, fireclay, facings, pattern and flask lumber and for storing flasks, hose, tools, and other supplies and miscellaneous materials that should not be exposed to the weather. In some cases it is most economical to store the iron, coke, and coal on a level with the charging platform of the cupola, which is usually from 12 to 15 feet above the floor of the foundry. This can be done by building the bins on a substantial elevated structure, which is provided with tracks connected by suitable inclines with the railway sidings. The materials are brought directly to the required height by the shifting engine that delivers the cars into the yard. Waterproof bins and sheds should be constructed under the upper yard and used for the storage of the supplies and appliances previously mentioned. Narrow-gauge tracks, from 30 to 36 inches (between rails), connect the upper storage bins with the charging platforms of the cupolas and the lower yard bins with the floor of the foundry.

The greatest possible care should be bestowed upon the construction and maintenance of the track systems and equipments, for smooth and well-laid tracks and substantial car trucks insure continuous and satisfactory service and minimize repairs and interruptions from breakdowns and derailments. A longer life of the structure is insured if it is not subjected to the shocks from wheels of heavily loaded cars passing over rail joints, frogs, and crossings. The narrow-gauge tracks are in almost constant use in foundries and the standard tracks must withstand very heavy loads; grade crossings of the two should not be tolerated. This can be done by arranging the upper bins between the two systems of tracks, with the narrow gauge next the building and the standard gauge on the far side. By the use of double-track bridges, turntables, and Y's, it is possible to reach all parts of the structure in the easiest and most direct manner and with the least delay in the service. The tracks should be so arranged that all loaded trucks will

move from the storage bins toward the cupola platform in the most direct line possible, and all the empties move in the opposite direction by a separate return track; the tracks should slope from the yard to the platform, and thus save labor in transporting the material to its destination. The most economical location for the sand bins is directly under the upper-yard stock bins. Sand should be shipped in cars with hopper bottoms, so that it can be dropped directly from the car into the bins. Coke and limestone require cars with side discharge, while gondolas are best for iron shipments, especially if cranes are used for unloading. The supply of sand should be secured during the summer, for the extra weight of wet sand increases the freight charges; besides sand shipped in winter is liable to be frozen, so that the unloading will require a greater outlay for wages. Careful foundry managers provide ample storage capacity and lay in a good supply of all necessary supplies in proper season; also, track scales are provided so that all materials deposited or withdrawn may be weighed. It is generally best to enclose the stock yard and other portions of the ground, not surrounded by buildings, by a substantial fence.

EQUIPMENT.

DESCRIPTION OF APPLIANCES.

12. Location of Cupolas and Charging Floors. The ideal location for the cupola is in the center of the molding floor; but this requires extensive grounds and track systems with long approaches to be really serviceable, as the railway tracks near the end of the building are on an inclined trestle and the coal, coke, and iron are delivered by the shifting engine directly to the cupola-charging platforms, which are sufficiently large to store a liberal supply of materials. In an arrangement of this kind the elevated platforms, or cupola top house, are over part of the molding floor. Foundries not having the necessary ground for this center

arrangement of the cupolas are equipped with elevators that convey the materials from the ground level to the cupola charging platforms. The next best position for the cupolas is midway along the side of the molding floor. This plan makes it possible to convey the materials from the upper bins outside the foundry to the charging platforms or to use elevators to handle the materials from the lower yard. With the cupolas at the side, the slag and refuse are easily accessible from the outside and can be removed without inconvenience to the molders.

In Fig. 5 is shown the plan of a charging platform where the cupolas are located near each other along the side of the

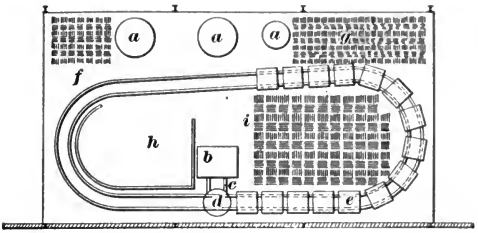

Fig. 5.

molding floor, while Fig. 6 shows the general arrangement of the appliances and materials on the platform. In this case all the stock for charging the cupolas *a*, *a* is brought to the floor by means of a hoist *b*, operated by an electric motor. A narrow-gauge track *c* leads from the hoist to the turntable *d*, which permits the trucks *e* to pass from the hoist to the elliptical-shaped track that extends around the floor. This track is long enough to hold a train of trucks with all the coke, iron, etc. required to charge the cupola for a day. The trucks pass by the cupolas and the materials are charged directly from them, thus necessitating a minimum of handling. A quantity of pig iron and scrap is stored at *f*, *g*, and *i* and coke at *h* to supply the cupolas for a short time in an emergency, such as the stoppage of the hoist, or an accident to the trucks in the yard, etc.

If more than one cupola is used, it is sometimes of advantage to place them far enough apart so that each will command an equal portion of the molding floor. This, however,

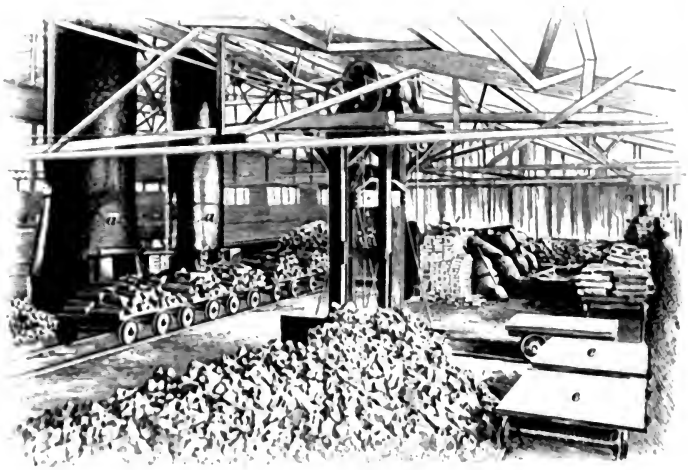

Fig. 6

depends on the general nature of the work and is less convenient in foundries where the metal from two or more cupolas is used for single large castings.

13. Blowers and Fans.—The blast is furnished to the cupolas by **blowers**, which may be *positive* or *non-positive* in character; the former forces a constant volume of air into the cupola, while the latter furnishes air at a constant pressure but does not necessarily deliver a constant volume into the cupola. A **positive rotary blower** is shown in Fig. 7 (*a*) and (*b*). The machine is driven by a belt on the pulley *a* on the shaft *d*, as shown in Fig. 7 (*b*), which is a vertical cross-section through the middle of the blower; gears covered by the casings *b* connect the upper shaft *c* with the lower shaft *d*. The impellers, or vanes, *e*, *f* are keyed on the shafts *c*, *d*, and in rotating within the casing *g*

in the direction of the arrows, draw the air in at *h* and discharge it at *i*. The impellers are constructed

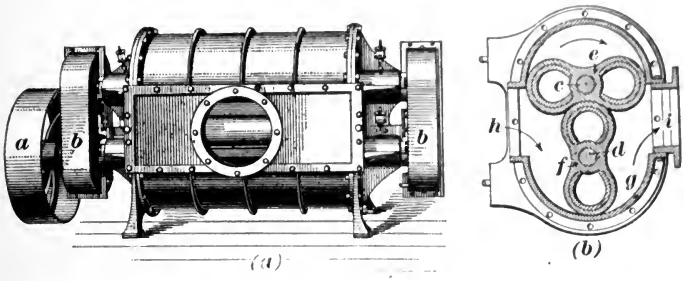

FIG. 7.

so as to have a close working fit with one another and with the casing. When revolving they are kept in their proper relative positions by the gears that connect the two shafts.

A **non-positive blower**, or **fan**, as it is commonly called, is shown in Fig. 8. The casing *a* encloses a fan wheel made of a number of straight or curved vanes fastened to the arms of the spider, which is keyed to the driving shaft *b*. The rapidly revolving fan wheel draws in the air through the central opening *c* and discharges it at the outlet *d*, whence it is conveyed through a suitable pipe to the cupola. Blowers and fans are frequently operated by direct-connected engines or electric motors. With a fan blower, the volume of the air is automatically increased as the resistance to the flow of the air is decreased, and vice versa.

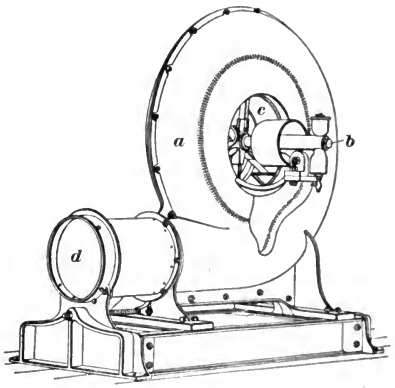

FIG. 8.

Blowers and fans should have solid foundations and should be located near the cupola, as the farther away they are, the more power is lost by friction in the pipes. The loss of pressure in the pipes increases directly as the length of the pipe and as the square of the velocity of the air. The combined areas of branch pipes should be somewhat greater than that of the main pipe from which they lead, and the area of all pipes should increase as the distance from the blower increases. If the diameter of the blower outlet is 3 inches, that of the pipe at 30 feet should be 3¼ inches, and at 300 feet 5½ inches. In erecting air pipes the least possible number of elbows or turns should be used, and these should be rounded, as square turns greatly retard the flow of the air. Sudden changes in the diameter of the blast pipe should be avoided. If it is necessary to reduce or enlarge the diameter of the pipe, this should be done with a special tapered section. Special care must be taken to have all joints air-tight. The distance between the blower and the cupola should be such that the blast pipe will serve as a reservoir of sufficient capacity to provide for the irregularities in the service. From 30 to 40 times its diameter is a good length for the blast pipe. The melting process in a cupola requires about 30,000 cubic feet, or about 3,000 pounds of air per ton of metal melted. If the tuyeres of a cupola become stopped when a fan is used to furnish the blast, the fan will cease to drive air into the cupola, but the pressure of the blast will not rise and give an indication of the difficulty. If a positive blower is used and the tuyeres become stopped, the pressure of the blast will rise until the obstruction is forced out of the way or until some weak part of the pipe system gives way.

14. Traveling Cranes.— The molding departments of large foundries are usually equipped with one or more overhead **traveling cranes** with runways extending the entire length of the molding floor; they are usually operated either by hand, electricity, or compressed air. Except in foundries where only light work is made, they prove

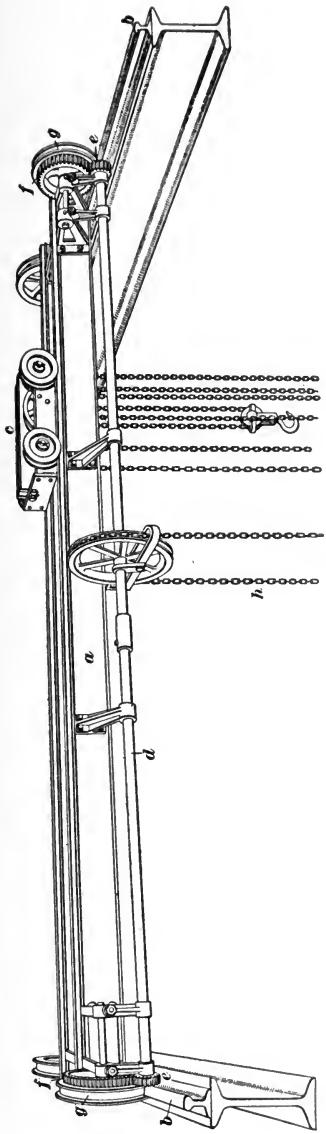

FIG. 9.

excellent labor savers. One style of hand-operated traveling crane is shown in Fig. 9. Such cranes usually consist of a bridge *a* extending across the foundry floor and resting on trucks at each end, which are supported by tracks *b* on the side walls or girders of the building. The bridge is operated from the floor by hand by means of a chain *h* that runs on a chain wheel on the shaft *d*; this shaft has a pinion *e* at each end that meshes with the gears *f*, *f*, which are keyed to the same shaft as the wheels *g*, *g* that rest on the track. When the shaft *d* is rotated by pulling the endless chain *h*, the crane is moved along the tracks *b*. A car *c* carrying the hoisting apparatus is arranged to travel along the bridge. Hand cranes are also operated by means of cranks and gearing on a stage suspended below one end of the bridge.

Where heavy work is to be done, electric or air motors are used to operate the cranes. An electric crane suitable for heavy work is shown in Fig. 10. The

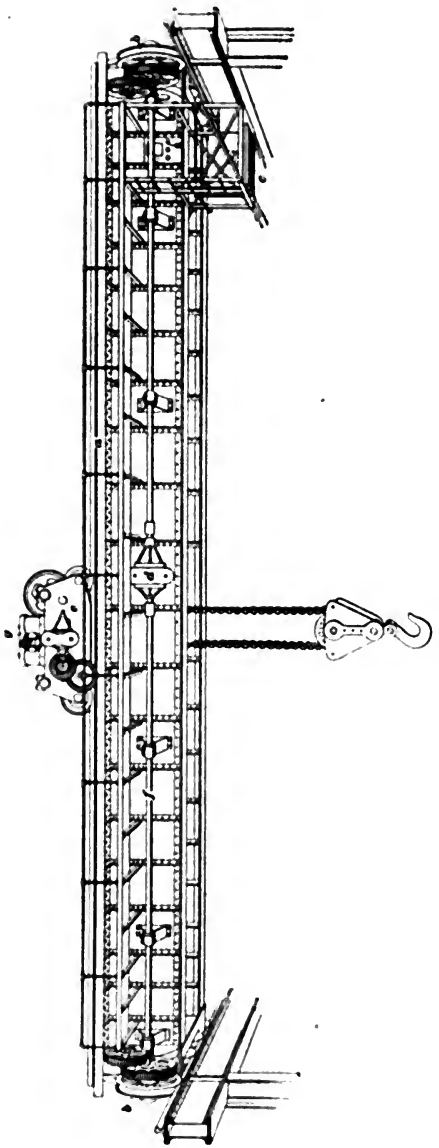

FIG. 10.

bridge *a* is made of two heavy steel-plate girders resting on a four-wheeled truck *b* at each end, which travel on tracks supported by the side walls of the building. An operator's cab *c* is attached to the bridge and is suspended under it at the side of the building opposite the cupola. The operator controls the motor *d* for moving the bridge along the length of the building, and the motors for moving the car *e* across the bridge and the vertical movement of the hoist. The motor *d* is located near the middle of the bridge and operates the shaft *f* that transmits the power to the gearing on the trucks *b* and causes the bridge to move along the tracks.

A motor *g* traverses the car *c* back and forth across the bridge. Some of the largest traveling cranes are provided with more than one car. The hoisting apparatus on the car may be direct acting for light work, and differential, duplex, or triplex acting for heavy service, though the car may be equipped with more than one hoist; a slow motion, for lifting heavy loads and a quick-acting hoist for lifting light loads, tilting heavy ladles when pouring castings, etc.

In order to prevent one end of the crane from lagging behind the other, it is important that the power be applied at or near the middle of the driving shaft *f*, unless some other provision is made in the design of the crane to prevent this difficulty. If the power is applied at the middle of the shaft, the torsion in the two parts will be as nearly equal as possible and thus tend to keep the bridge square with the tracks, thus reducing the friction and the power required to drive it. It is also necessary to place the load as near the middle of the bridge as possible, as a heavy load at one end will tend to make that end lag behind the other. The tracks of the runways should be kept in good alinement.

The apparatus for hoisting and moving the bridge should be started very gradually; sudden changes of motion should never be made, for serious accidents have been caused by rapidly changing the motion of the bridge, especially when it is loaded at one end. When started suddenly, there is a tendency for the loaded end of the bridge to lag behind and the other end to leave the track and fall to the floor; accidents of this kind have resulted in the loss of life and considerable property. Care should also be taken not to load the crane beyond its capacity, and to use each appliance for the purpose for which it is designed. It is not proper, for example, to use a heavy and slow-acting crane to handle light work that is to be lifted and transported within a limited and prescribed area. Such work is more economically done by the use of hand cranes, as previously mentioned, or by jib cranes, or pneumatic hoists.

15. A jib crane suitable for light work is shown in Fig. 11. Such a crane consists of a post *a*, pivoted at the top and bottom, and carrying a jib *b*. Sometimes both of the pivot plates are supported by one of the side columns of the building. A brace *c* supports the outer end of the jib. A trolley *d* carrying a chain hoist *l* is shown on the jib. The

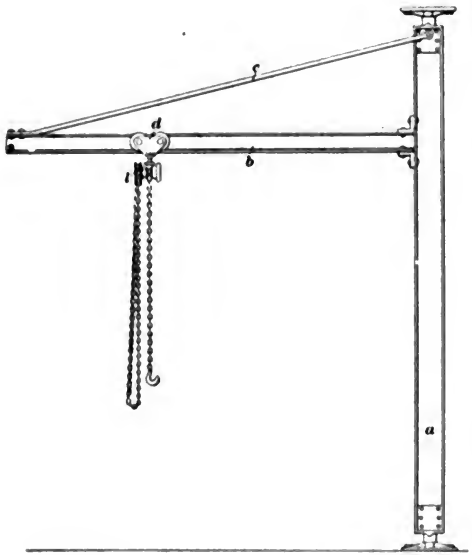

FIG. 11.

trolley *d* is also frequently equipped with a pneumatic hoist. Cranes of this type are usually secured to the columns of the building at the side of the molding floor, as shown in Fig. 4, and are designed to swing freely under the traveling crane; or they may occupy the whole space where no traveling crane is used.

In Fig. 12 is shown a jib crane for heavy service. The frame is made of steel and braced in a very substantial manner. The post *a* is formed of two channel bars stiffened by lattice braces riveted across the sides as shown. The jib *b* is made of two heavy girders separated far enough to

form a track for the carriage *c*, and to allow enough clearance between the girders for the vertical movement of the hoisting chain. The winch *e* for lifting the loads by means of the hook *f* is attached to the post *a* near the bottom so as to be conveniently operated from the floor by means of two hand cranks *g*, *g*. The movement of the carriage along the jib is controlled from the floor by means of a hand chain *d*

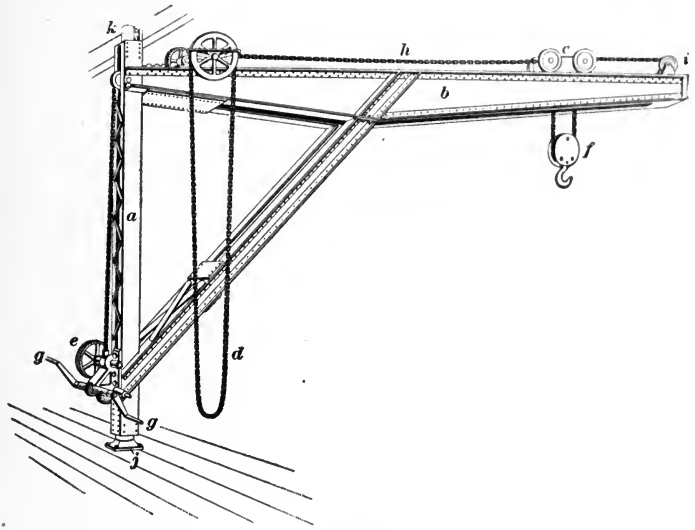

FIG. 12.

that operates the gearing on top of the jib at the end next to the post. The arrangement is such that an endless chain *h*, which is attached to the carriage *c*, passes around the wheel *i* at the outer end of the jib and a driving wheel that receives its motion from the power applied to the hand chain *d*; the carriage is moved backwards or forwards at the will of the operator. Electric or air motors or steam engines are often used both for operating the winch and the carriage.

The plate *j* on which the post *a* is pivoted should be supported by a substantial foundation. The upper pivot *k* is usually secured to one or more of the braces of the building.

16. Chain Hoists.—There is a great variety of hoisting appliances applicable to crane and trolley work. Some style of pulley block, which may be either of the differential, duplex, or triplex form and which will support the load in any position without the continuous application of power, is generally used; these are operated by hand, compressed air, or electricity. They may be attached to a crane or trolley simply by means of a hook, which is the case when a special trolley carriage is used, and also for light service. In Fig. 13 is shown a combined triplex hoist and trolley, which is a style frequently used.

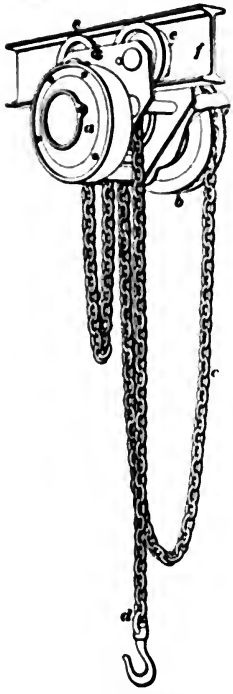

FIG. 13.

The hoisting mechanism of a triplex pulley block consists of a direct train of spur gears enclosed in the circular frame *a* and operated by means of a wheel *b* carrying a hand chain *c*. The gearing gives motion to a drum, which moves the chain *d* that supports the weight. The trolley is provided with four truck wheels *e*, two on each side of the track *f*. In the plain form, as shown in the illustration, the movement of the trolley is effected by pushing horizontally against the load in the direction desired; for heavier work, a geared trolley is used, which is moved by means of an endless chain passing over a wheel geared to the wheels of the truck.

It is customary to use chains for hoisting purposes, but they often cause slight irregularities and shocks, which are objectionable when lifting copes, withdrawing patterns, or setting cores. For these reasons wire ropes are preferable, as they work smoother; defects in steel ropes are more easily detected by superficial inspection than defects in chains. To insure safety, crane chains, hooks, and slings

should be inspected frequently and annealed at least once a year.

17. An **air hoist** is a serviceable appliance that can be used when compressed air is available. Such hoists are simple in construction, light in weight, occupy little space, are easily operated, and are not so likely to shake the sand out of copes as chain hoists. One form of air hoist is shown in Fig. 14 and consists of a cylinder *a*, in which there is a piston that supports the piston rod and the load on the hook *b* on the end of the piston rod. The compressed air is conducted to the hoist through a hose attached to a pipe at *c*; a valve *d* in the pipe at the lower end of the cylinder controls the admission of the air to and its exhaust from the cylinder and is operated by hand by means of the chains *e*, *e* and handle *f*. An air hose is more or less objectionable when it hangs down in the way of the workmen, and automatic reels and other contrivances are sometimes used to carry the slack hose. Such hoists may be stationary or portable; the latter style is suspended either by a hook that enters the ring *g*, or on trunnions *j* that rest on the carriage *h* that runs on a track *i*, as shown in the illustration. The latter form gives more room over the molding floor.

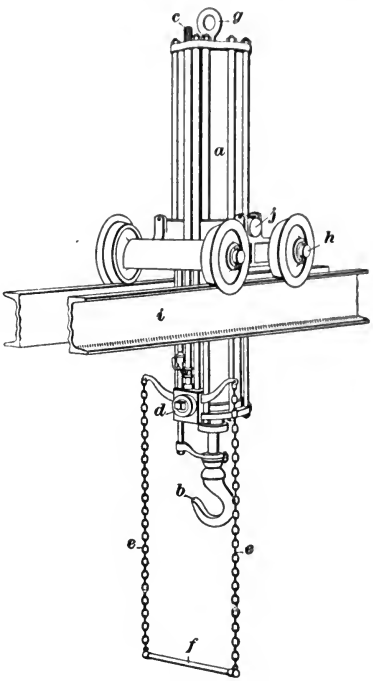

FIG 14.

A *screw-governed air hoist*, shown in Fig. 15, is sometimes used in foundry work, as it is easily controlled and will support a load in perfect safety in any position within the length of its stroke. It works smoothly and can be delicately adjusted, and is therefore useful for lifting copes, drawing patterns, and setting cores. The air is admitted to and exhausted from the cylinder by means of a valve *a* at the lower end of the cylinder *b*, which is operated by a cord *c*. It requires a slight movement of the hand chain *d* to start the load either up or down. For light loads it can be worked without air pressure as an ordinary screw hoist. The motion is transmitted from the hand chain through the bevel gears *e*, *f*. The small gear *f* is on the end of the screw *g*, which extends into the hollow piston rod *h*, and the rotation of the gear causes the screw *g* to turn in the piston nut *i* and either raises or lowers the hook *j*, depending on the direction the power is applied to the chain *d*. This is really a screw hoist in which most or all of the load is supported by the compressed air during hoisting. If the load is left hanging on the hook, it will not lower if some of the compressed air leaks out.

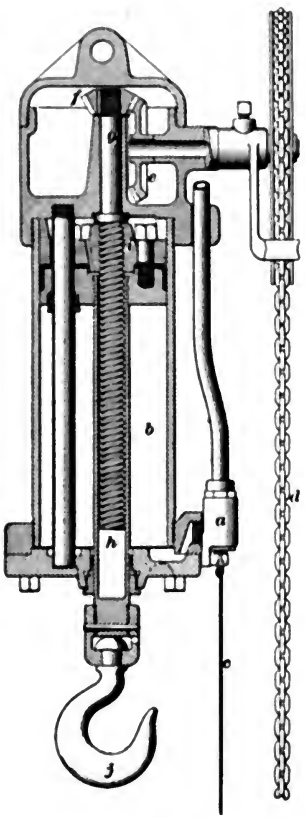

FIG. 15.

18. Trolleys.—Overhead trolley systems are frequently used instead of cranes. They possess many advantages for

handling light and medium work up to 1,500 or 2,000 pounds. They can be arranged to cover a large area; the devices are

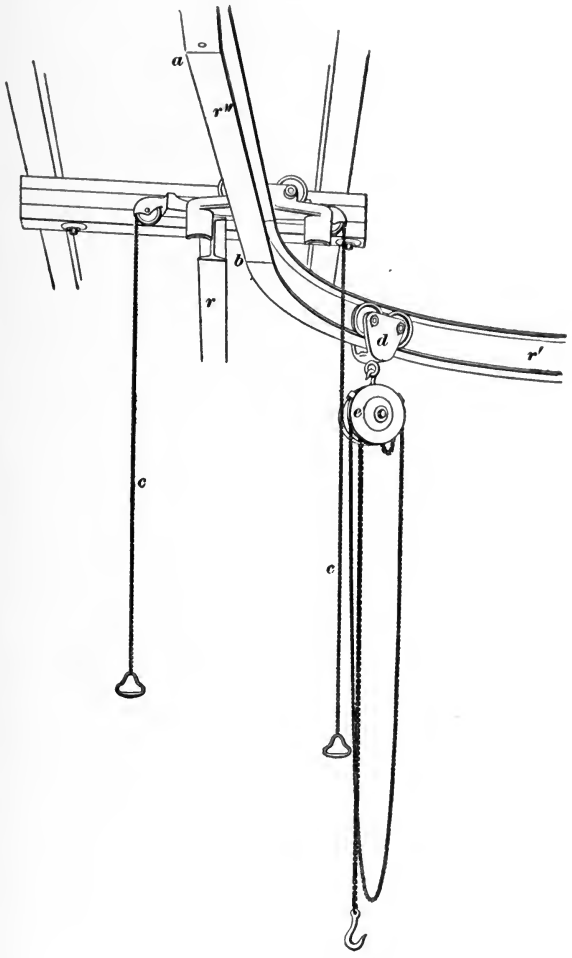

FIG. 16.

easily handled and several trolleys can be used on the same track at the same time without interference. The

tracks can be erected so as to join two or more departments of the foundry and the system may comprise a single track with switches or a double track with or without crossovers.

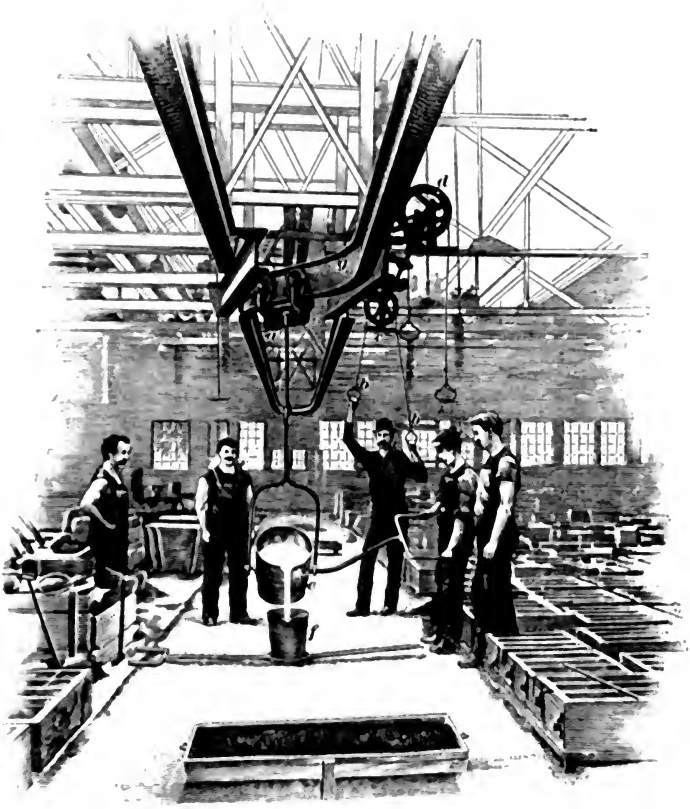

FIG. 17

They are very serviceable for use over side floors where not obstructed by overhead traveling cranes, and can be suspended from the roof trusses, or in a variety of ways suited to all conditions. As the tracks cannot be supported

under traveling cranes without erecting posts on the floor, it is best under these circumstances to keep the tracks near the walls and secure them to brackets attached to the main columns of the building. The tracks are made of channels, I beams, or flat bars. The switches and crossovers must be designed so as to insure a continuity of the runway, and with no possibility of remaining open and dropping the trolleys. The trolley carriage for the flat-bar track may be simpler than any other style, having either one or two rollers as a support, but the double form running on I beams or channels is more substantial.

Fig. 16 shows a single-rail trolley system with a switch to carry the trolley from the main track to a side track. The portion of the track between *a* and *b* is hinged at *a* and serves as a switch. Its position is regulated from the floor by means of the chains *c*, *c*, so that either the main track *r* or the side track *r'* may become continuous with the switch rail *r''* as desired. The trolley is shown at *d* supporting a chain hoist *e*; pneumatic hoists are frequently used instead of chain hoists. The switch *r''* is provided with projections, one of which is always opposite the open end of the track so as to prevent a trolley running off the end of the track. One of these projections is shown at the end of the open track *r*.

In Fig. 17 is shown a double-track trolley system using crossovers, one of which is shown at *g*, for the purpose of changing the trolleys from either track to the other. The switch is operated from the floor by means of chains *b* that pass over a pulley *c*. A duplicate operating pulley *d* is arranged at the other end of the crossover for convenience. This system allows the use of several trolleys *a* on the tracks at the same time without interfering with one another, as shown in Fig. 18. The trolley ladles *b*, *b* pass under the spout of the cupola *c*, and after receiving the melted iron, change from the track *d* in front of the cupola by means of any one of the several switches *e*, *e* to some one of the main tracks *f*, *f* and are taken to the floor where the molds are to be poured.

The trolley *a*, Fig. 18, suitable for carrying large ladles, consists of four wheels *g*, *g*, two on each side of the **I** beam, held in place by a frame *h* that supports the ladle. There is a heavy coil spring in the sockets at each end of the frame *h*; the load rests on the springs, which prevent vibration and make the carriage smooth running. In Fig. 17 is shown an important application of the trolley system. A large ladle *c* of molten iron is brought from the

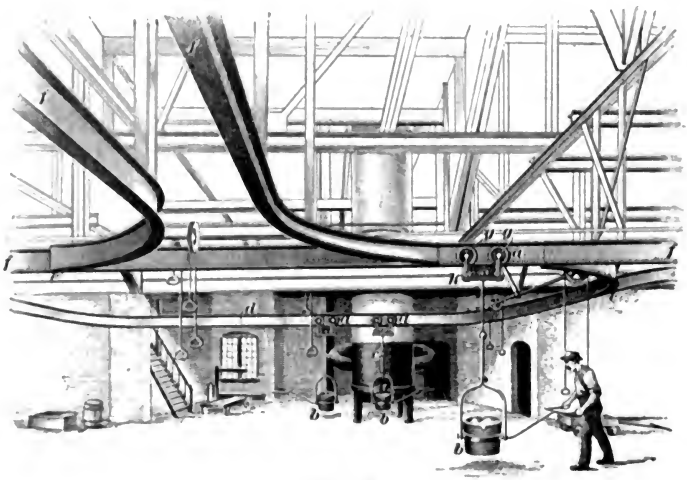

FIG. 18.

cupola to the place where the pouring is to be done and hand ladles *f* are filled from it for the purpose of pouring light castings on that immediate portion of the floor. This plan aids in keeping the iron hot for the work. By using the crossover *g*, the trolley ladle returns on the other rail to the cupola and leaves the way clear on the outgoing rail for other ladles to reach the same part of the floor.

A single flat bar set on edge is sometimes used for a trolley track, especially for light work. The carriage in this case may have either one or two wheels with the necessary frame and attachments for supporting the load.

19. Automatic electric trolley systems, or **telphers,** are used in foundries for conveying materials in the departments and from one building to another. They are serviceable for delivering castings from the molding floor to the cleaning room, the storeroom, or the shipping department. These telphers are operated from the floor by an electric switch. They run on overhead wire cables or tracks, over curves and switches, and in either direction; they can be arranged also to run on the surface or underground with equal facility. The car runs to its destination, the bucket trips and returns automatically. The equipment requires very little skill to operate it and its use greatly reduces the manual labor in handling materials.

20. Sand Conveyers. — In ordinary sand molding, either in flasks or bedding in the sand, molds are poured and shaken out at or very near the place they are made. In such cases the sand is usually tempered by hand and used over again. From time to time some of the worst burned sand is rejected, taken away, and fresh sand brought to take its place. When lighter or finer grades of work are made, where many cores or a great many nails or irons are used, the preparing of the sand becomes a serious item of expense and hence various systems of *conveyers* and machines for preparing the sand have come into use. This is especially true in shops where many duplicate small molds must be made. In general it may be stated that as the percentage of time required to prepare the sand compared with the time it takes to make the mold increases, the saving effected by mechanical devices for preparing the sand will increase.

In some cases it may be found advantageous to use an automatic trolley system to distribute molding sand. This may prove economical in foundries where bench molding at stationary benches predominates, but generally a more elaborate system of sand conveyers is used. A complete system for molding-sand distribution comprises an underground conveyer for taking the sand from the place where the molds are shaken out, a crusher, a mixer, a magnetic separator, a sifter, a temperer, an elevator, and an overhead conveyer

with distributing chutes and valves for returning the sand to the molding floor. It is rather difficult to design on an elaborate scale a sand conveyer that will be entirely satisfactory in operation, for the abrasive action of the sand soon destroys many of the details and impairs the efficiency of the system. Steel ropes and chains are not suitable for use in such conveyers, as they will soon be cut through by the sand.

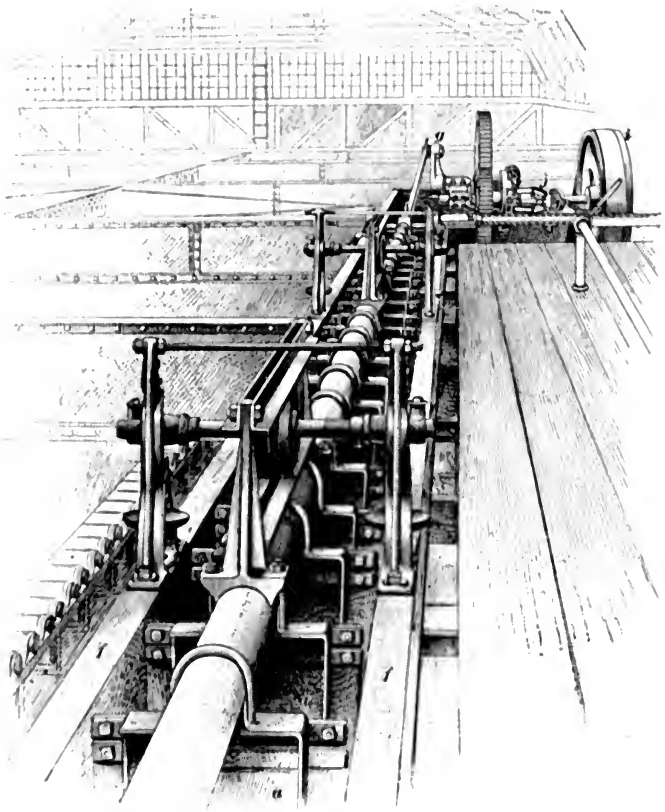

FIG. 19.

Sand conveyers of the **reciprocating type,** illustrated in Fig. 19, have given the best satisfaction in foundry

practice. They are simple in construction and the parts are not subjected to much destructive wear. Fig. 20 shows a longitudinal sectional view of an overhead sand conveyer, which consists of a series of wooden or steel blades *a* suspended from a tubular bar *b* by means of hinged connections *c*. The hinged joints are so constructed that they will not allow any movement of the blades back of a vertical position.

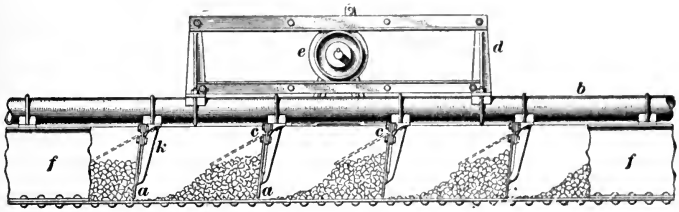

FIG. 20.

The tube is supported by angle-iron brackets *d*, each enclosing a flat-faced roller *e*, which allows a horizontal movement of the bar of from 3 to 4 feet. The bearings for the roller shafts are supported on the edges of the trough *f* in which the sand is conveyed. The blades are suspended in a trough *f* that receives the sand from an elevator. The bar is given a reciprocating motion by a crank *g* on the driving shaft, as shown in Fig. 19. The conveyer is driven from a belt on the pulley *i* and is stopped and started by means of the friction clutch *j*. The blades are held rigid during the forward motion by the supports *k*, Fig. 20, the bottoms being slightly in advance of the upper edges, and push the sand along the trough. During the backward motion, the blades lift upwards as indicated by the dotted lines and slide over the sand, dropping down behind the piles of sand formed in the forward stroke, and the forward motion is repeated. Openings with suitable valves and chutes are arranged in the bottom of the trough in places where the sand is needed. The oscillating system admits of great flexibility. The sand may be carried forwards in one or more main conveyers to branch conveyers, which deliver it to all parts of the molding floor.

21. In addition to the reciprocating conveyer illustrated in Figs. 19 and 20, a **rubber-belt conveyer** is frequently used. This consists of a rubber belt supported on pulleys in such a manner as to cause the belt to assume a trough shape. This may be accomplished by having one set of pulleys supporting the center and two sets of inclined pulleys placed in such a way as to support the outside edges of the belt. Such a belt is subject to less wear than a reciprocating conveyer and has a very great capacity, on account of the fact that both the sand and the conveyer are constantly moving forwards, hence the great loss of energy necessary to overcome the inertia of the reciprocating parts of the conveyer and to start and stop the sand is avoided.

The disadvantage of this style of conveyer is that it must deliver the material which it conveys at some stated point, either at the end of the conveyer or by means of a special side discharge at some point along its line. The reciprocating conveyer can be made to fill a series of pockets or hoppers. All the sand will fall into the first hopper until it is full, after which the conveyer will simply scrape the sand across the top of this hopper to the next, and so on. By having a discharge opening beyond the last hopper through which the sand falls after all the hoppers are full, the operator can see immediately when all the hoppers are full and stop the conveyer and the elevator that supplies it. This gives him but a single point to watch in order to control the system, while if a rubber-belt conveyer is used with an automatic arrangement for discharging into any one of the hoppers, it is necessary to observe each hopper separately, so that the apparatus requires considerable personal attention. Rubber-belt conveyers are especially applicable as main-line conveyers for supplying branch conveyers of the reciprocating type.

22. Sand Sifters.—New molding sand contains more or less gravel and vegetable matter, which must be removed before mixing. Sand that has been used generally contains

nails, gaggers, shot, iron, and fins. Sifters for this work are made in a great variety of styles; a plain *vibrating form* is shown in Fig. 21. It consists of a box sieve *a* that is supported on a frame by four flat-steel springs *b* on which the sieve vibrates. The top ends of the springs are bolted to the bottom of the box *a* and the lower ends are bolted to the crosspieces *c* of the frame. The screen receives its reciprocating motion from a cam disk *d* on the driving shaft *e* extending across the top of the frame under one end of the box. The cam acts against a projection *f* attached to the box, pushing the latter horizontally against the pressure of the springs, which return it to its normal position when the cam has passed. The sand is deposited on the screen at the end *a* of the box, the sifted portion passing into the wheelbarrow *g*, and the refuse into another barrow *h* at the lower end of the sieve.

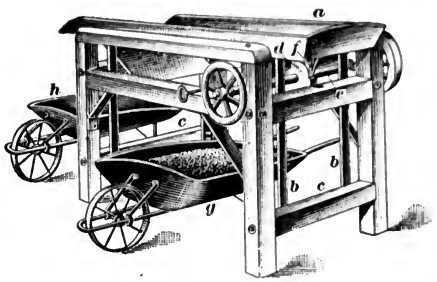

FIG. 21.

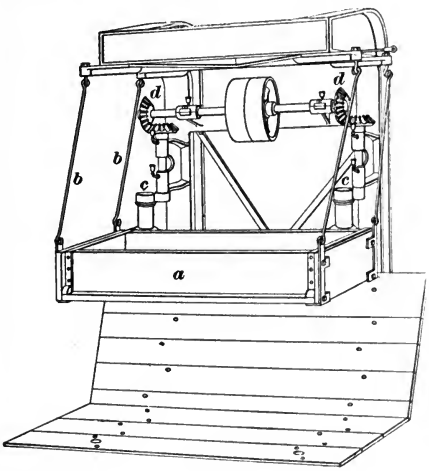

FIG. 22.

Another style of shaking sifter is shown in Fig. 22, which has a box-shaped sieve *a* supported by four rods *b* and to which is imparted a combined oscillating and rocking motion by means of the cranks *c*, *c*. The machine is belt

driven and operates the crank-shafts by means of the bevel gears *d*. This style of machine is also made to operate by hand. The refuse must be removed from the sieve with a shovel whenever necessary. The sifted sand falls on the floor, or into wheelbarrows or a conveyer.

The *pneumatic sifter*, shown in Fig. 23, is portable and is useful for sifting sand as needed at the mold. The ordinary

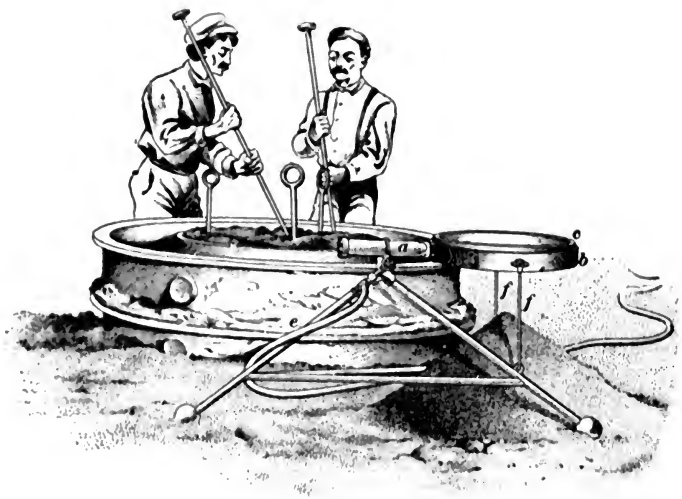

FIG. 23.

form of foundry hand riddle is used in this machine, which consists of an air cylinder *a*, a circular iron frame *b* for holding the riddle *c*, and a supporting tripod. Compressed air is furnished to the cylinder through a hose *e* and gives a rapidly reciprocating motion to the piston attached to the frame *b*. The riddle *c* vibrates on top of the vertical hinged rods *f*, *f*, and the sand that is shoveled into it falls to the floor as it is shaken through the riddle.

A *rotary sifter*, shown in Fig. 24, consists of two hexagonal frames covered with wire screen *a*. A stand *b* supports

the bearings for the shaft *c* of the screens together with either the electric motor *d* or the pulleys, by means of which it is driven; some machines have but one screen. Knockers *e*, *e* are generally used to loosen the sand that clogs the screens. These are pivoted at the ends of arms *f*, *f* attached to the frame of the machine. Lugs *g*, *g* on the ends of the frames carrying the screens, pass under the projections *h* on the ends of the knockers and cause the pads *e* to strike

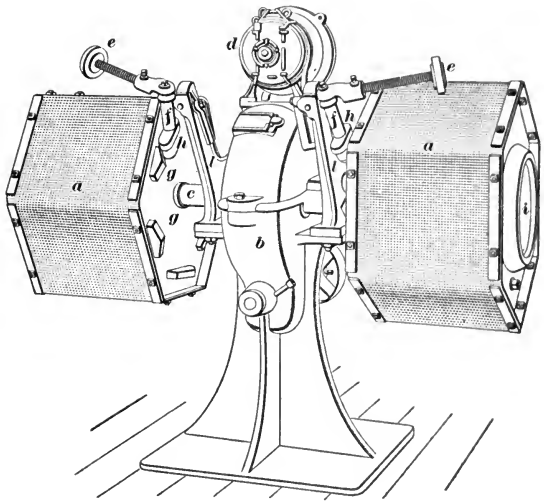

FIG. 24.

the screens. Brushes are sometimes used instead of knockers. The sand enters the hole *i* at the end of the drum either by means of hand shovels or a conveyer. The accumulation of gravel and iron in the drum is removed by opening one section of the screen, although in other designs a conical sieve is used, the sand being fed in at one end and the coarse material passing out at the other end. This style of sifter is sometimes made portable by mounting it on trucks.

23. Magnetic separators are most frequently used to remove the nails and other iron particles from old sand, also in brass foundries to remove iron chips from fine scrap brass or brass chips, where it is very important that all the iron should be removed from the mixture before it is charged into the crucible. They are also used for the recovery of iron from cupola cinder. In brass foundries this mixture is usually made up of scrap and turnings from the machine shop that contain iron and other foreign substances. One form of magnetic separator is shown in Fig. 25. The sand or other material is introduced in a hopper *a* and passes over a revolving brass drum *b*, which has either permanent or electric magnets arranged in the interior in front of the axis of the drum. The iron particles are attracted by the magnets and are carried around to the rear of the drum, where they are removed by a brush *c* or are released by passing out of the magnetic field. The sand or brass passes into the box *d* or into chutes that lead to bins or conveyers while the iron falls under the machine.

FIG. 25.

24. Sand Mixers.—The old-fashioned way, and one that has been universally used, is to mix the sand with the hand shovel. In the larger foundries, mechanical **mixers** are now used. In Fig. 26 is shown one type of mixer, known as the *propeller type*, which consists of an iron

trough *a* for holding the sand and in which a revolving propeller *b* makes a thorough mixture of the old and the new sand, facings, core mixtures, etc. The mixture is dumped

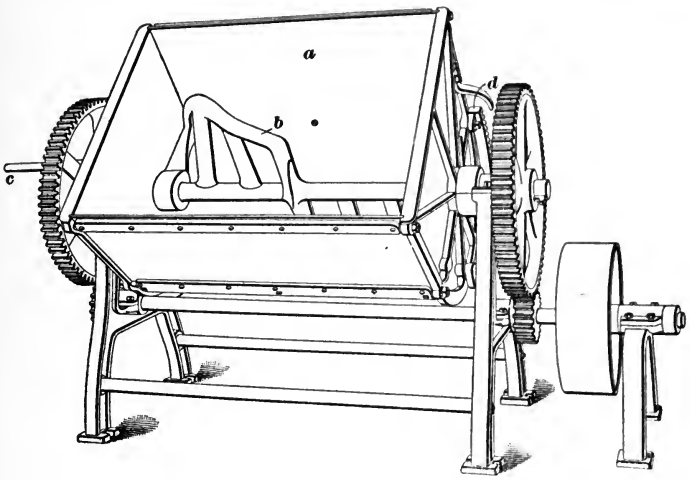

FIG. 26.

out by tilting the trough by means of the crank *c* and a gear that meshes in the rack *d* attached to the trough *a*. Mixers of this type are sometimes equipped with a sand sifter of the form shown in Fig. 21.

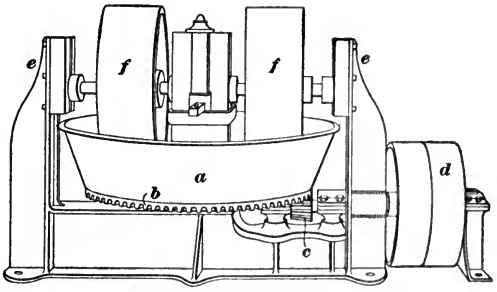

FIG. 27.

Another type of mixer known as the *roller machine*, shown in Fig. 27, is used mostly for mixing loam. It consists of a

large, flat-bottomed, cast-iron bowl *a* that is made to revolve by means of a bevel gear *b* attached to the bottom of the bowl, and a pinion *c* on the shaft carrying the pulleys *d*. The side supports *e* carry bearings for a shaft, on which are placed two heavy broad-faced rolls *f*, *f*. The loam is put into the bowl by means of shovels, or a conveyer, and as the bowl revolves, the rolls pass over the loam and pulverize it.

A *centrifugal mixer* that depends for its operation on the centrifugal force of the sand is shown in Fig. 28 (*a*) and

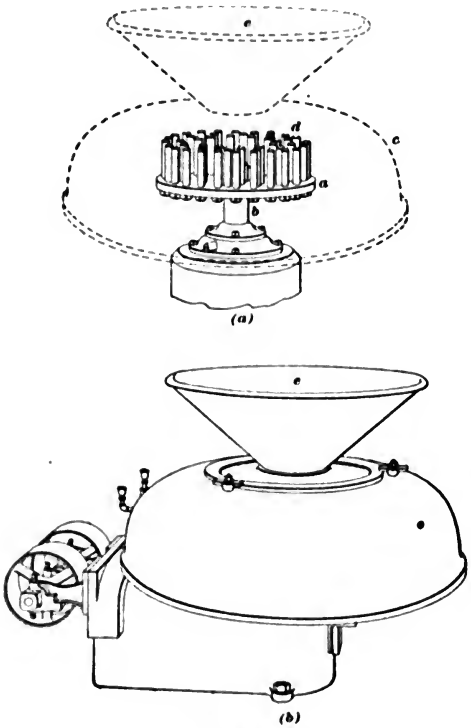

FIG. 28.

(*b*). It consists of a disk *a* mounted so as to be rapidly revolved on the top of a vertical shaft *b* and enclosed in a

cast-iron case *c*. On the upper surface of the disk a series of steel pins *d* are fixed. The sand is introduced through a hopper *e* at the top to the center of the rapidly revolving disk and is thrown outwards through the pins. In passing between the pins the lumps are pulverized and the material thoroughly mixed. The mixture falls from the bottom of the case *c* either on the floor or into the trough of an underground conveyer and is ready for immediate use with the possible exception of tempering.

25. Sand Temperers. — The water for tempering sand is usually supplied from a hose or sprinkling can, and the sand tempered by hand. A mixing machine, shown in Fig. 29, having a heavy boiler-iron tank similar to the mixer

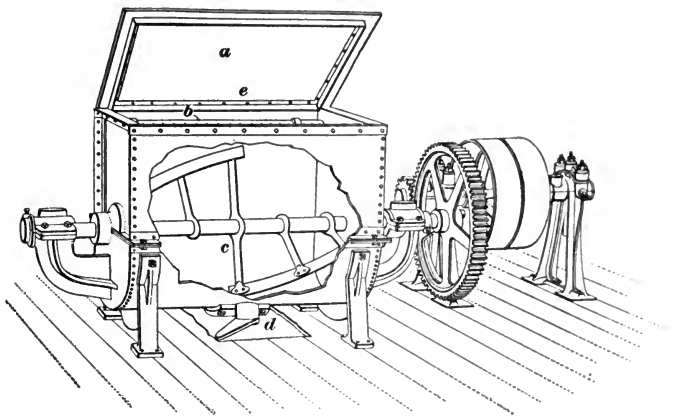

FIG. 29.

shown in Fig. 26, but with a cover *a*, is frequently used for this purpose. A spray of water is thrown on the sand through a perforated pipe *b* while it is being mixed by the revolving propeller *c*. A door *d* in the bottom of the box is arranged so that the sand may be withdrawn, when it is mixed and tempered, either directly into a wheelbarrow or into the hopper of an underground conveyer.

26. Sand Elevators.—After the molding sand has been prepared for use, it must be delivered to the various places where it is used. This may be done in wheelbarrows or trucks, or by means of a system of conveyers that is placed overhead; if a conveyer system is used, an elevator is necessary to raise the sand to the level of the conveyer. An underground conveyer delivers it to the base or boot of the elevator. One of the simplest and most efficient elevators, shown in Fig. 30, consists of a belt *a* (leather, rubber, or steel), carrying buckets *b*, which passes over a drum *c* at the top and under a similar one at the bottom. Chains are sometimes used for this purpose, but leather, rubber, or steel bands are better able to withstand the abrasive action of the sand. The working parts are generally enclosed in a wood or iron case *d*. The buckets of the elevator deliver the sand to the trough of the overhead conveyer. The power is applied to a pulley or gear on the shaft of the upper drum. About 40 feet per minute is the best speed for a sand-elevator belt. Vertically movable bearings, which may be adjusted by means of the screws *e*, are provided in the top carriage for the purpose of taking up the slack in the belt. The pocket *f* about the foot of the

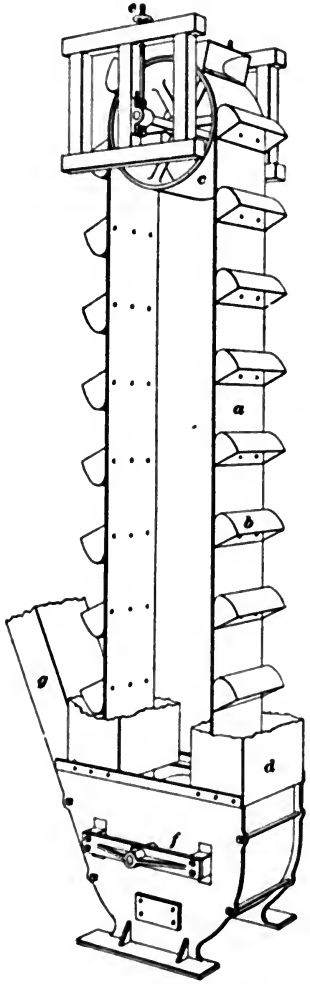

FIG. 30.

elevator is called the **boot,** and the material to be raised is introduced into it through a chute *g*.

27. A **mold conveyer** is an appliance used in some of the large foundries to transfer the molds, cores, etc. from the benches and molding machines to the cupola or the casting room, and to return the empty flasks to the molders. With such a device it is possible to divide the foundry into two departments—the molding room and the casting room. This system applies to small and medium-sized work, which can be made in portable molds. For large work the molten iron is carried to the molds, necessitating the use of a

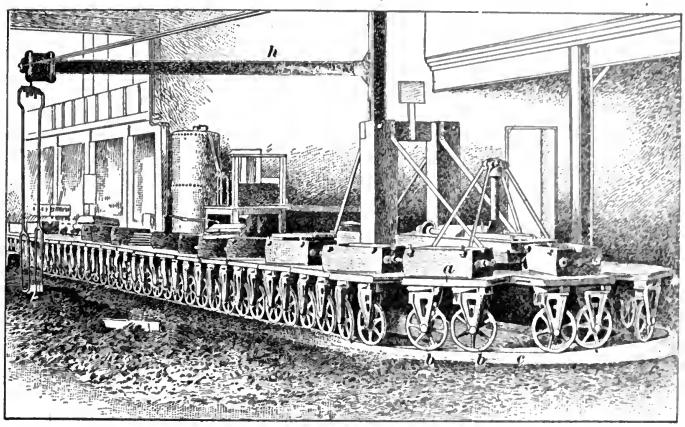

FIG. 31.

traveling crane, jib crane, trolley, or truck ladle. In the smaller foundries, and in many larger ones as well, the molds are arranged on the floor near the cupola and the molten iron carried to them. Figs. 31 and 32 show one style of mold conveyer, which consists of a train of trucks *a* with iron tops connected close together to an endless link belt so as to form a continuous traveling platform. The belt travels around a large sprocket sheave at each end of the line. The outer edge of each truck is supported by two wheels *b*, *b* that are grooved to fit a rail *c* laid level with

the floor and extending along the entire conveyer circuit through the molding department and around the cupolas

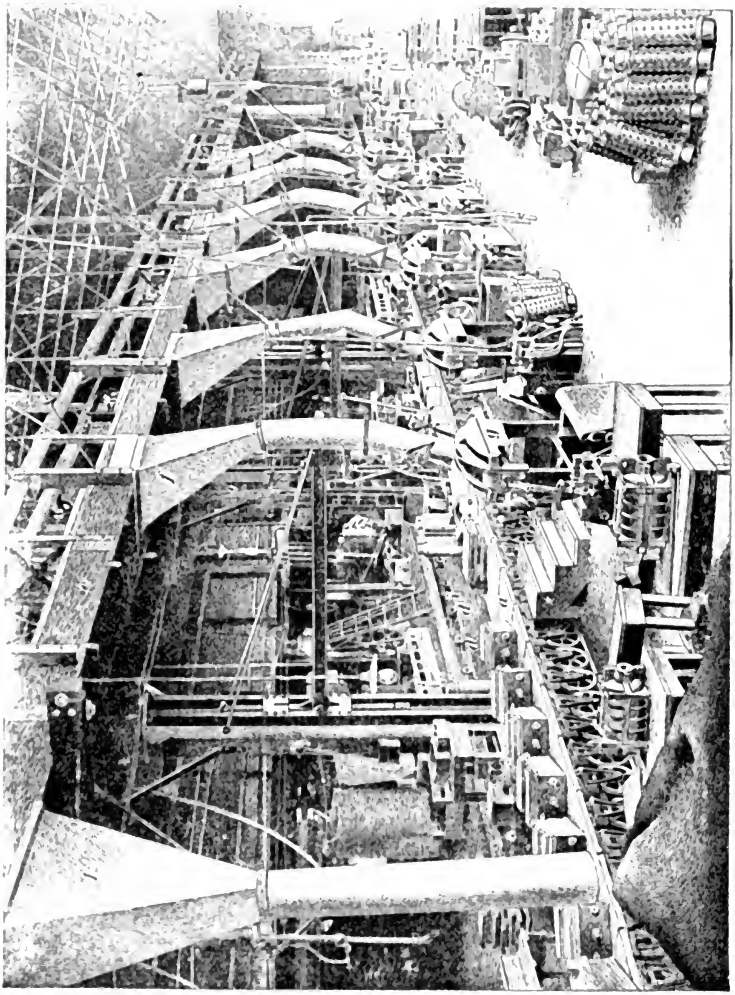

FIG. 32.

and casting platform. The inner edge of the top of each car is supported by grooved wheels *d* running on a T rail *t*

near the top of the cars. Where such a system is used, the cupolas are located on a base raised a few feet above the floor level, and at the same height as the top of the conveyer, so that the men pouring the molds may easily step from the floor to the top of the conveyer. The molders are located along the conveyer in the molding room.

Molds made in the machines *g* and on the floors are preferably deposited on the conveyer in halves. The drags are supplied with cores, and the flasks closed by the core setters. Large molds, especially those requiring large or heavy cores, are brought to the casting floor, removed from the conveyer, and bedded on the floor; the cores that follow them on the conveyer are then set. Bench molders and those using snap flasks usually set their own cores, close the molds, and place them on the conveyer. The molders have completed their part of the work when they have deposited either the finished or open molds in good condition on the conveyer. Jib cranes *h* or trolleys with air hoists are sometimes used to lift the molds on and off the conveyer. The finished mold is poured while on the conveyer as soon as it comes within convenient reach of the casting gang, who draw the metal in shank ladles from the cupolas, step on the conveyer, and pour the iron while in motion. In some cases the ladles are carried by means of a trolley running on a track that runs over and parallel to the conveyer. The molds are taken from the conveyer when near the cleaning room, shaken out over a grating, which allows the sand to fall into an underground sand conveyer, and the empty flasks are returned on the conveyer to the molder. The cores are removed from the sand and the gates knocked off the castings, which are taken to the cleaning room. For large work, the motion of the conveyer is controlled by an operator, who starts it forwards whenever a section is loaded with molds. This intermittent movement allows all the molding operations to be carried on simultaneously. Conveyers of this type for small work run continuously, the molds being put on while it is in motion. Sand for the molding machines *g*, Fig. 32, is

brought by a conveyer *e* to the hoppers *f*, the conveyer *e* being like the one illustrated in Fig. 19.

28. Another form of conveyer, shown in Fig. 33, consists of two endless steel bands *a*, *a* passing over large pulleys at the terminals and supported throughout their length on a steel framework *b* that carries rollers *c* at short intervals at about the floor level. The upper bands carry the

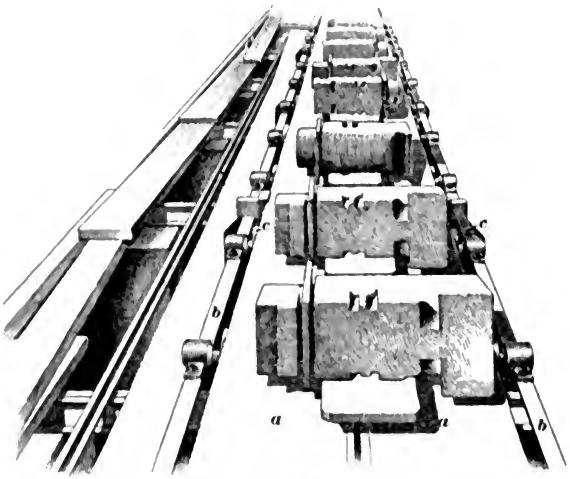

FIG. 33.

molds to the casting room, where they are removed to the floor and the flasks completed for pouring. After shaking out, the empty flasks are returned on the lower bands of the conveyer, which run in a pit under the upper bands *a*, to the molding department. The illustration shows the conveyer loaded with cores for railway-car journal-boxes. Conveyers of this type are preferably located centrally in the building, with the molding machines arranged in line along both sides. By leaving a passageway from the conveyer to the rear of the machines, the floor and bench molders are enabled to deposit their finished work on the conveyer and receive cores and empty flasks from it. In some cases it is desirable to arrange the machines and the benches at right

angles to the conveyer, or in various other ways to best suit the existing conditions.

29. Charging-Floor Elevators.—The elevators used to deliver the iron, coke, and other materials from the ground

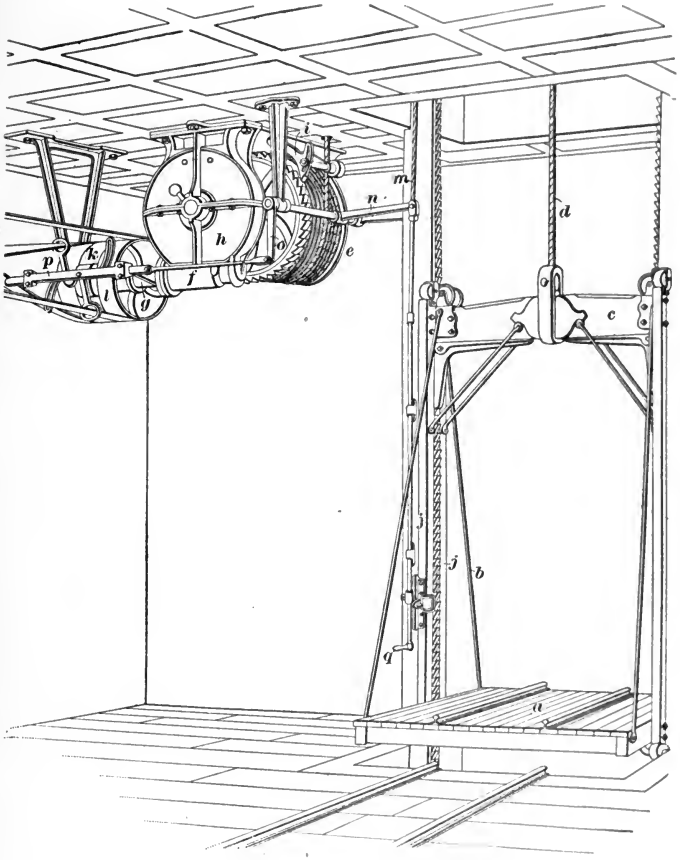

FIG. 34.

to the cupola charging platform are operated either by belts, hydraulic cylinders, compressed air, or electric motors. Their speed is from 60 to 80 feet per minute. The platform

should be large enough to accommodate one or more cars used for hauling the materials. It is an advantage in some cases to use double elevators. A single elevator must be balanced by counter weights, while double elevators balance each other and give double service with only a little more power than is required by the single one. The old style of

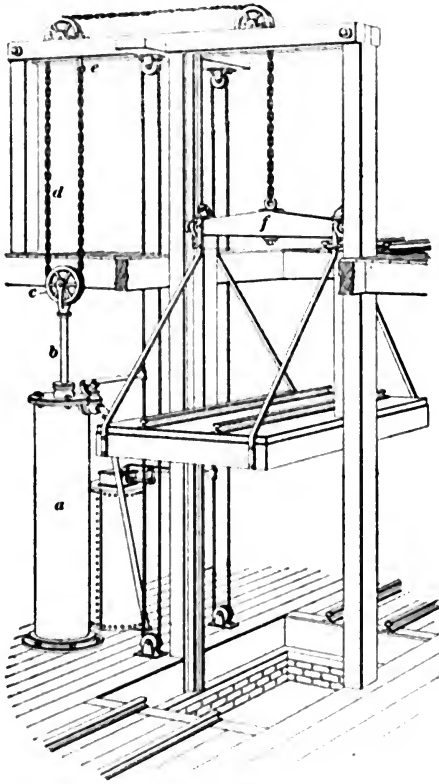

FIG. 35.

drum hoist, shown in Fig. 34, is extensively used. The cage consists of an open platform *a*, uprights *j*, braces *b*, and a cross-tree *c*, to which the cable *d* is attached. The cage works between guides on each side. The cable *d* passes over a large sheave at the top of the tower and returns to

the winding drum *e*, which is fastened by suitable bearings and base frame to the overhead joists. A worm in the case *f* on the shaft supporting the pulley *g*, drives the worm-gear in the case *h*, which is rigidly attached to the drum shaft. The safety catch *i* holds the drum and the load in any desired position when the driving power is shut off.

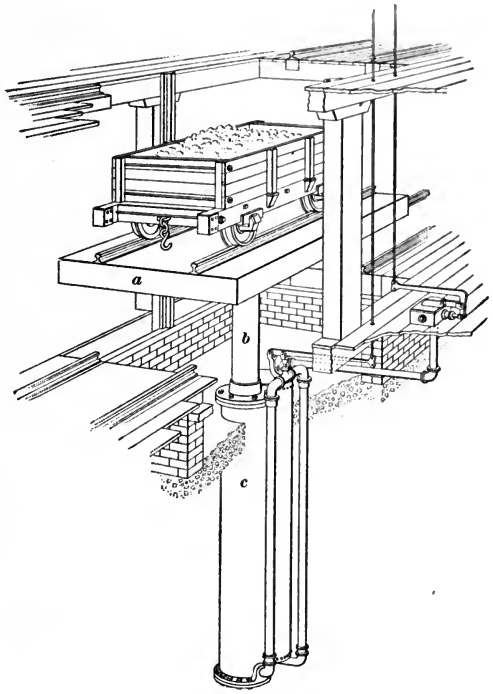

FIG. 36.

The belt runs continuously, and to start the elevator it is necessary to shift the belt from the loose pulley *k* to the tight pulley *l*. This is done from above by pulling the rope *m*, attached to the shifting mechanism *n*, *o*, and *p*, or from below by the handle *q*. Electric motors are often used to operate this style of elevator, the motor being connected directly to the screw gear.

The same general form of cage is also operated by a hydraulic cylinder *a*, as shown in Fig. 35. The piston rod *b* carries a pulley *c* that engages a loop of the chain or cable *d* passing from the eyebolt *e* to the cross-tree *f* of the cage. With a single sheave on the piston rod, the lift and speed of the cage is double that of the piston. Any desired ratio of speeds can be secured by using sheaves at *c* and *e* with a suitable number of grooves. This form of elevator is generally used for high-speed work.

Hydraulic elevators are also so arranged that the platform *a*, as shown in Fig. 36, is placed directly on the end of a plunger *b*, which works in a hydraulic cylinder *c*. The load is lifted by forcing water into the cylinder under the plunger, and is lowered by its own weight when water is discharged. This style of elevator is used for heavy service. Its speed depends on the rate the water fills or empties the cylinder *c*.

30. Pig Breakers.—When full-sized pigs are used in making up the cupola charges, there is danger of injuring the lining, disturbing the coke bed, and making unsatisfactory open piling; they are also inconvenient to handle. Hence it is common practice to break them into two or more pieces. This is usually done by hand with a heavy sledge. Some founders, however, employ hydraulic or belt-driven **pig breakers** that give good service. Sandless pig is often small and requires no breaking.

31. Economical Production.—The purpose of the use of labor-saving appliances in a foundry is to produce castings at a lower cost. But to secure the greatest benefits from such appliances, there must be not only a careful selection of each, both in kind and number, but also a systematic arrangement of the whole plant so that each appliance may operate to its fullest capacity on the particular line of work for which it is designed. In the larger foundries the greatest subdivision of the various operations is most necessary. The economical manufacture of castings is best accomplished by using all the appliances in unison

and assigning to each employe distinct and limited operations to perfórm; that is, a molder should do molding exclusively, one set of men should set cores, another close flasks, and other men should shake out and remove castings, a carpenter should repair flasks, and so on with all the foundry operations. The flasks, sand, cores, and all materials should be brought to the molder. The molten iron may be brought to the flasks or the flasks taken within easy reach of the casting gang. No employe should have cause for leaving the immediate work in hand, or for using the tools of another, and the arrangement should be such that each man is required to do his share. The employes should have short hours and good wages and be required to perform the least amount of unnecessary labor, but, on the other hand, they should be required to turn out the greatest possible amount of good work during the working hours. The molder should make the best use of his manual skill and intelligence in performing the work assigned to him, and the foreman and superintendent should carefully plan and direct the work.

FOUNDRY APPLIANCES.

(PART 2.)

SMALL MACHINES AND APPARATUS.

FLASKS, CORE ROOMS, AND CLEANING OUTFITS.

FLASKS.

1. Flasks are the most important appliances used in molding operations. They vary in size according to the class of work to be made, and should be selected so that the use of the smallest quantity of molding sand will produce good castings, but at the same time large enough to prevent the loss of castings on account of an insufficient body of sand to hold the metal in place. Flasks should be made as light in weight as possible without impairing their strength and stiffness, so as to be easily and cheaply handled. Nearly all foundries confine their operations to the production of castings of one class, or at most to only a few classes. Jobbing foundries are at a disadvantage in this respect, as they are compelled to keep a large assortment of flasks. Specialty foundries have the best opportunity to cut down the variety of flasks to a minimum.

For notice of copyright, see page immediately following the title page.

2. Large Wooden Flasks.—Fig. 1 (*a*) shows a flask for heavy work. It is made of thick lumber, the side pieces *a* being grooved to receive the ends of the end pieces *b*, and the parts are held securely together by means of bolts *c* with nuts and washers *d*. Trunnions *e* are provided at the ends of heavy flasks so that they may be raised or turned by means of hoists. In Fig. 1 (*b*) is shown a wooden flask designed for work of medium weight. The sides *a* have extensions *b*, *b*, which serve as handles by means of which the flasks may be lifted and turned over by hand. The sides are fastened to the ends *c* by means of lagscrews *d* and washers. A strip of wood *e*, fastened to the drag, slides between the strips *f*, *f*, fastened to the cope, which serve to keep the two parts of the flask square with each other. Heavy wooden flasks may also be strengthened by corner blocks *i*. Wooden flasks are made of pine, white wood, hemlock, or chestnut lumber.

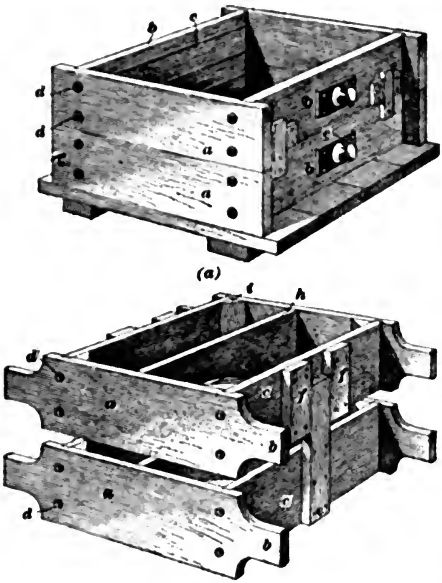

FIG. 1.

3. Large Iron Flasks.—In steel foundries where the molds are submitted before pouring to a drying process in an oven, the flasks must be made of iron, as shown in Fig. 2. The ends and sides of this flask consist of metal plates *a* of medium thickness reenforced by ribs *b* on the outside. The

bottom board *c* is held to the flask by means of U-shaped clamps *d* and wedges. Either cast iron, wrought iron, or steel is used in the construction of this style of flasks, and the sides and ends are either bolted or riveted together. Steel flasks for large work are sometimes made so that they can readily be increased or decreased in size so as to accommodate work of different sizes. This is done by making both the sides and ends of the flasks of two pieces that overlap and are provided with a series of holes so that they may be bolted together to make up different sizes.

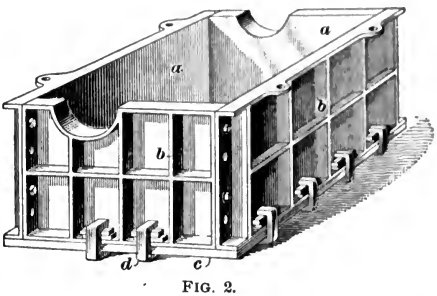

FIG. 2.

4. While large castings are usually molded in loam, the disadvantages of this method as compared with dry-sand molding in flasks are thought by some founders to outweigh the advantages, and they have adopted the latter method. The first cost of making a large iron flask with all the necessary appliances for dry-sand molding is much greater than that for the preparation, materials, and appliances for molding the casting in loam, but when a number of the castings is required, the lower first cost of the loam-molding equipment is offset by the lower cost of the dry-sand mold when once the necessary appliances are provided, and hence if a large number of heavy castings from a given pattern is required, it is generally cheaper to use dry-sand molds. The cleanliness of the molding floor and the economy of time and floor space are also in favor of the molding in flasks. The relative prices of sweeps and patterns used in both methods will depend on the form of the casting.

In Fig. 3 is shown an iron flask for molding the 43-ton engine bedplate, shown in Fig. 4; the side and end elevations

of the flask and the method of fastening the cross-bars are shown in Fig. 5 (*a*), (*b*), and (*c*), and the longitudinal and transverse sections and plan of the mold in Fig. 5 (*d*), (*e*),

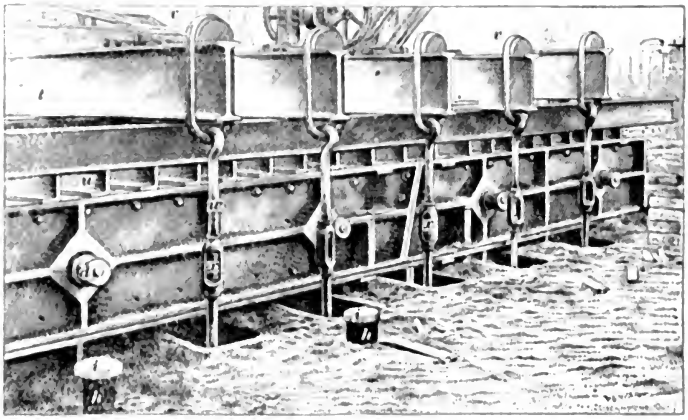

Fig. 3

and (*f*). The bedplate is molded upside down, as shown by the pattern *a*, Fig. 5 (*d*) and (*e*), because the smoothest and best side of a casting is that at the bottom of the mold, and in this case all the machined surfaces are on the top of the bedplate. The sides and ends of the flask are cast-iron plates reinforced by heavy ribs *b*, and fastened together by means of bolts running through the flanges *c* along the edges and across the ends, as shown in Fig. 3 and Fig. 5, (*a*), (*b*), (*c*), (*d*), (*e*), and (*f*). It is very important that in the construction of large flasks, which are lifted by means of trunnions *d*, Fig. 3, that the plates be made very stiff, and that the corners be flanged and bolted so that they will not be distorted when the flask is lifted. Any distortion of the corners or plates will cause the sand to spread and injure the mold.

Fig. 4

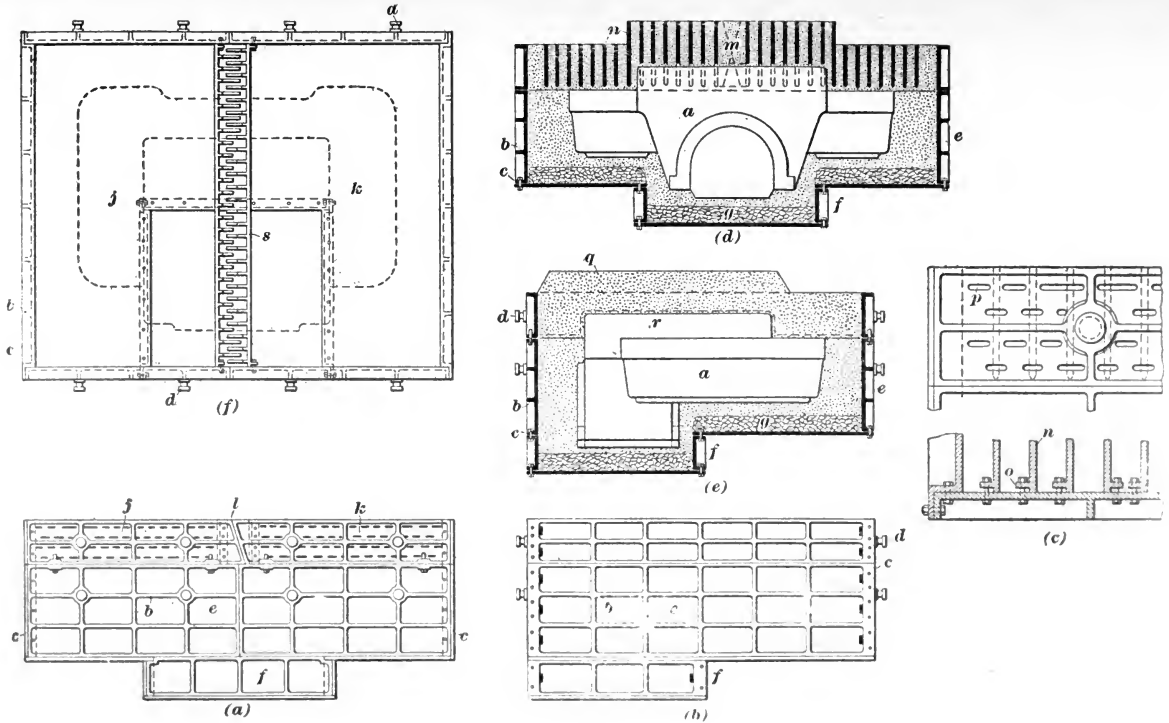

FIG. 5.

The drag *c*, Fig. 5 (*a*), has an extension *f* on the bottom and is placed in a pit about 7 feet deep. The foundation for the drag consists of 18 steel I beams resting on two cast-iron bearing bars 6 inches square, which extend lengthwise at the sides of the flask. The bottom of the flask is made of $\frac{1}{2}$-inch steel plates laid on the I beams. A bed of coke *g*, Fig. 5 (*d*) and (*e*), about 10 inches deep, is spread on the bottom and vented by a number of 4-inch wrought-iron pipes extending through the sides of the drag and brought to the surface of the foundry floor by the risers *h*, shown in Fig. 3; the caps *i* on top of the risers are used to prevent sand from entering the pipes, and are removed when the mold is being poured.

The lower portion *f* of the drag is 8 ft. 11 in. × 9 ft. 5 in. × 22$\frac{1}{4}$ in., and the larger part *e* is 17 ft. 4 in. × 21 ft. 1$\frac{3}{4}$ in. × 4 ft. 8 in. The cope is in two pieces *j* and *k*, Fig. 5 (*a*), united by a diagonal joint *l*. A tapered dry-sand core *m*, Fig. 5 (*d*), is used to close the mold after the two parts of the cope are in place, the opening serving for an entrance for a molder to inspect the mold before it is finally bolted together. The core arbor for holding the core *m* is shown at *s*, Fig. 5 (*f*).

The cross-bars *n*, Fig. 5 (*c*) and (*d*), are of cast iron and are fastened to the sides of the cope by means of bolts through flanges *o* at each end of the bars and slots *p* in the cope, the slots permitting lateral adjustment of the bars. The cross-bars are elevated in a portion of the cope, as shown at *q*, to allow room for the extension of the core *r*. The estimated weight of this cope when rammed with sand is 60 tons, but it is necessary to bind the parts of the flask securely together to prevent the molten metal from lifting the cope. A series of steel I beams *t*, Fig. 3, are placed across the top of the flask. The lower ones run lengthwise of the cope, and are supported on a row of angle bars *u*, which elevate the I beams above the projection *q*, Fig. 5 (*c*), of the mold. The ends of the top beams extend over the sides of the mold and are fastened to the two 6″ × 6″ cast-iron bars in the foundation by means of heavy iron loops *v*

and rods w, Fig. 3, the tension being regulated by means of turnbuckles x in the rods.

5. Flask Pins.—In order to hold the two parts of a flask together and to have them accurately match each other, it is necessary to fit one part with two or more pins and the other with sockets to correspond with the pins. Flask pins are made of round, square, triangular, or diamond-shaped cross-sections. Any of these forms is satisfactory provided the pin is well made and carefully fitted. They are

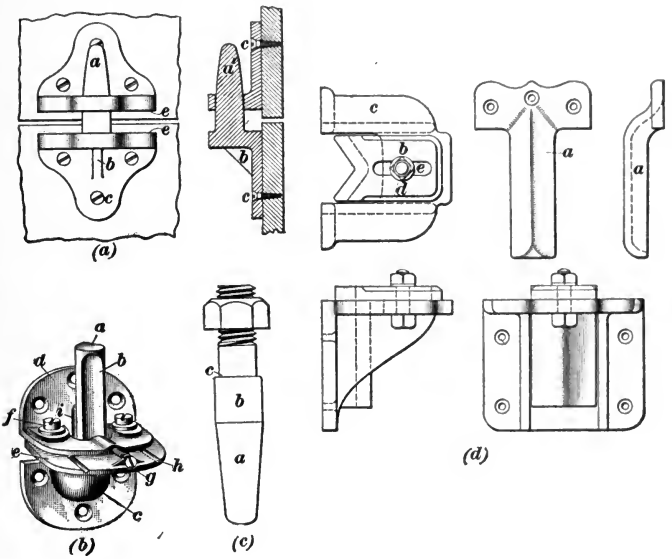

FIG. 6.

made of cast iron, malleable iron, brass, or steel, and in some cases deep wooden flasks have strips of wood of the form shown at e and f, Fig. 1 (b), in place of pins. Strips of this form are sometimes placed on deep flasks in addition to the regular style of pins. Fig. 6 (a) shows a solid pin, (b) an adjustable one, and (c) a steel pin. The flask pin shown at a and in vertical section at a', Fig. 6 (a), is cast solid with the lug b and the plate that is fastened to the

drag by means of the screws *c*. The pin is tapered so as to easily enter the hole in the lug *d* on the cope. The adjoining faces *e*, *e* of the lugs should not meet when the flask is closed, but should be from ⅛ to ¼ inch apart; otherwise, the sand that accumulates on the lower lug while molding will prevent a close fit between the cope and drag.

Small iron flasks, especially those used on molding machines, require pins that fit very accurately. One form of pin suitable for this style of flask is shown in Fig. 6 (*c*). These pins are made of steel; they are from 3 to 4 inches in length over all, and all the parts are machined. The pin has a tapered portion *a* at one end to facilitate its entrance into the hole in the lug on the cope, and a cylindrical part *b* that accurately fits the hole. The pin is fastened into a hole in the lug on the drag by means of a nut on the threaded end of the pin that clamps the lug against a shoulder *c* on the pin.

6. Rectangular iron flasks usually have four pins, one near each corner, and round flasks, three pins. Where flasks are not interchangeable, the pins are frequently made adjustable, so that when the flasks become sprung or bent out of shape from use the pins can be made to fit accurately. As a rule, only small flasks can be made interchangeable on account of the fact that the different parts of large flasks become sprung so that the pins will not fit. Fig. 6 (*b*) shows an adjustable pin that has the socket on the cope made in two parts *d* and *e* that are fastened together by means of two screws *f*. The movable plate *e* is adjusted under the upper plate by means of a screw *g*, so as to make a snug fit between the pin *a* on the piece *c* and a vertical V-shaped projection *i* on the edge of the movable plate *e*. The plate *e* is guided by two grooves *h* that fit corresponding projections in the stationary part *d*.

An adjustable pin for flasks for floor molding is shown in Fig. 6 (*d*). The pin *a* is fastened to the drag by means of three screws. The socket on the cope is made in two pieces *b* and *c* fastened together by means of a ⅜-inch bolt *d*, through

a slot *e* in the movable part *b*, and permits the latter to be adjusted so that when the cope and drag are put together, the pins *a* fit into the V-shaped groove in the edge of the adjustable part *b* of the socket, freely, yet without any unnecessary lost motion.

7. Cross-Bars.—Cross-bars are frequently introduced into the cope portion of a flask to support the sand. The cross-bars *h*, shown in Fig. 1 (*b*) and at *a*, Fig. 7 (*a*) and (*b*), are preferably made removable to facilitate the adaptation of the same flask to different patterns. The wooden cross-bars are generally made tapering toward the bottom *g*, Fig. 7 (*b*), and a part of each bar is usually cut away from the lower side, as shown at *j*, Fig. 7 (*a*), so as to conform to the shape of the patterns to be molded. It is an advantage to make cross-bars of cast iron if they are to be used for standard work, as they are inexpensive, strong, and serviceable. If made of cast iron, they are preferably provided at each end with a flange *b*, Fig. 7 (*a*), by means of which they are bolted to the sides *c* of the flask, and should be provided with either holes or projecting pins to assist in supporting the molding sand. In order that gaggers *d*, *d*, Fig. 7 (*a*) and (*b*), may be used safely and conveniently, the top edge of the cross-bars should stand about 1 inch or more below the top edge of the flask, so that when one end is hung over the cross-bars it will not project beyond the top surface of the mold.

8. When long cast-iron cross-bars are used, they must be supported by cross-braces to prevent them springing sidewise out of a straight line when the sand in the flask is being rammed. Cast-iron cross-bars are also put closer together than wooden ones. In Fig. 7 (*c*) and (*d*) are shown two methods of bracing cast-iron cross-bars. The cheaper and easier method is to drive wooden blocks *i* between the cross-bars *h*, as shown in Fig. 7 (*c*), using one or more rows of blocks, depending on the length of the cross-bars *h*. The blocks are placed between the bars, as shown at *k*, Fig. 7 (*c*), and then driven so as to stand square, as shown at *i*. The

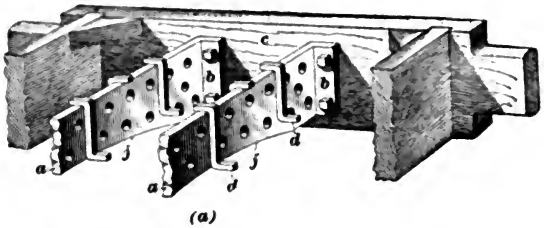

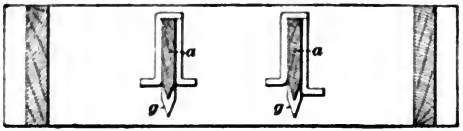

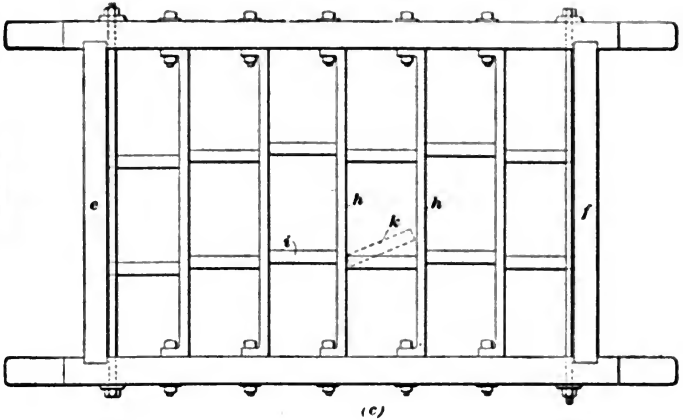

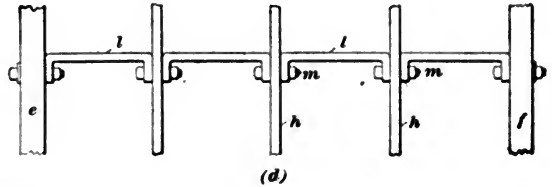

FIG. 7.

tendency of the wood braces is to bulge the ends of the flask. The ramming of the sand also bulges the ends of the flask and tends to loosen the braces. The better method to brace the cross-bars is to use cast-iron pieces *l*, which are bolted to the cross-bars *h* and to the ends of the flask *e* and *f*, as shown in Fig. 7 (*d*); these iron pieces act both as braces and ties. The bolts *m* pass through holes in the flanges of the braces and slots in the cross-bars, the slots permitting a lateral adjustment of the braces.

9. Small Iron Flasks.—Jobbing foundries, almost without exception, use wooden flasks exclusively, while specialty and brass foundries generally use iron flasks. Iron

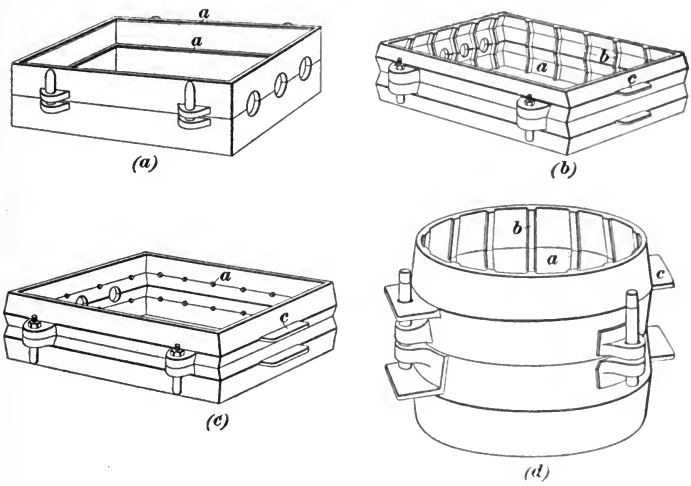

FIG. 8.

flasks give better satisfaction than wooden ones; they have a longer life, are stiffer, do not burn, and are safe and convenient to handle. They are specially designed to obtain strength and light weight; standard sizes are from 12 to 60 inches in length and from 4 to 16 inches in total depth. For the purpose of holding the sand in the flasks, the interior edges are provided with horizontal ribs at the top, bottom, and parting lines, as shown at *a*, Fig. 8 (*a*), and sometimes,

in addition to these with double-beveled ribs *a* and perpendicular ribs *b*, Fig. 8 (*b*) and (*d*), or with another form known as a *porcupine spine*, shown at *a*, Fig. 8 (*c*). Fig. 8 (*d*) illustrates a circular iron flask with double-beveled ribs *a* and vertical ribs *b*. The round flasks have three pins and the others four, two on each side. Many of the best iron flasks are fitted with steel pins. Flasks used on molding machines should always be made of iron and have good fitting and interchangeable pins, so that the cope of one flask can be used with the drag of another flask of the same dimensions. Iron flasks generally have lugs *c*, shown in Fig. 8 (*b*), (*c*), and (*d*), for handles.

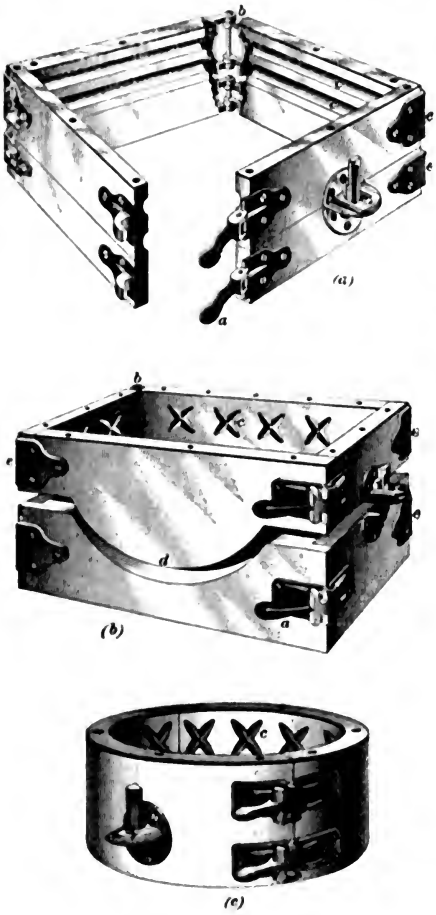

FIG. 9

10. Snap Flasks. It is often desirable in molding small castings to have flasks that can be removed from the molds. Flasks for this purpose are called **snap flasks**, and are constructed as shown in Fig. 9 (*a*), (*b*), and (*c*), with clasps at *a* and hinges at *b*, so they can be opened and removed

from the mold. The inside faces are usually grooved as shown at *c*, to assist in molding the sand while removing the flasks. The flasks are sometimes made with a taper, being larger at the bottom than at the top, so as to facilitate the application of slip boxes over the molds after the flasks have been removed. Snap flasks are made of white wood, or selected cherry, well saturated with boiled linseed oil, and are rectangular, square, or round, as shown in Fig. 7 (*a*), (*b*), and (*c*). The parting line is sometimes of special form, as shown at *d*, Fig. 9 (*b*), to conform to that of the patterns. The flasks should be light and strong with the corners iron-bound, as shown at *e*, *e*, Fig. 9 (*a*) and (*b*). The clasps are made of malleable iron, and should be quick acting and good fitting.

Standard sizes of snap flasks vary from 9 to 12 inches in width by 10 to 20 inches in length, and the copes and drags vary from 2 to 6 inches in depth.

11. Nests of Flasks.—Iron flasks if constructed so as to be fastened together by means of hooks and pins, as shown

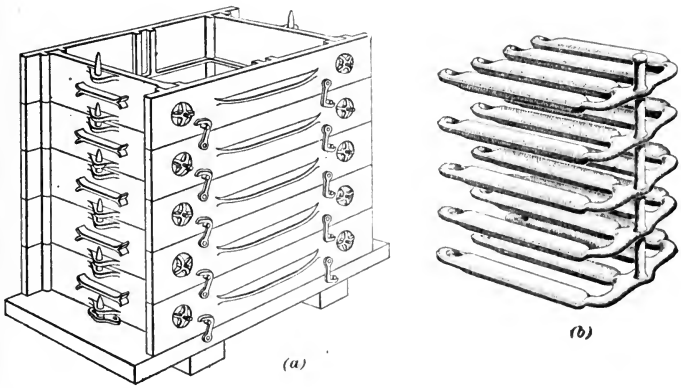

FIG. 10.

in Fig. 10 (*a*), are used in nests for multiple molding. With this style of flask each section forms the cope for one mold

and the drag for the section immediately above it. The molds are made in machines that form a half mold on each side. By placing them on top of one another, they form a complete mold between each pair of sections. Each section has a sprue, except the bottom one. This method of molding saves time, sand, and space, and it can be applied to the rougher class of work for articles of simple designs and uniform cross-section, such as sash weights, washers, pipe flanges, stove lids, etc. Nest molding is also done in snap flasks, the molds being piled on top of one another and the flasks removed. A nest of sash weights that has been made in this manner is shown in Fig. 10 (*b*).

12. Interchangeable Knock-Down Flasks.—Interchangeable knock-down flasks consist of four independent pieces interlocked when put together by means of grooves and tongues and quick-acting clamps. The flasks should be taken apart when not in use, as in this condition they occupy but little space, and they can be conveniently stored in bins or on shelves in the foundry. They are easily assembled, quickly changed from one size to another, and permit a large variety of different sizes to be selected from a comparatively small number of parts.

13. Mold and Bottom Boards.—Mold and bottom boards form a necessary part of the equipment of foundries. They should conform in size to the sizes of the flasks. Each molder requires at least one mold board and as many bottom boards as he produces flasks in one day. The mold boards are usually made of pine; the better grades have hard-wood strips fastened across their ends by means of grooves and tongues. The bottom boards are made of hemlock or pine and have two or more strips fastened across one side, for the purpose of stiffening and holding the single boards together and facilitating their handling. Mold boards can be made of light materials, but bottom boards must be made strong and the large ones should be from $2\frac{1}{2}$ to 3 inches thick. Mold boards are used during the process of molding only; bottom

boards are clamped to the flasks and remain under them until the molds have been poured off and shaken out. Both should be kept in good condition, as it is very important that neither of them become twisted or warped.

CORE ROOMS.

14. Core-Room Arrangement.—The core rooms of jobbing foundries are generally much neglected places. Core

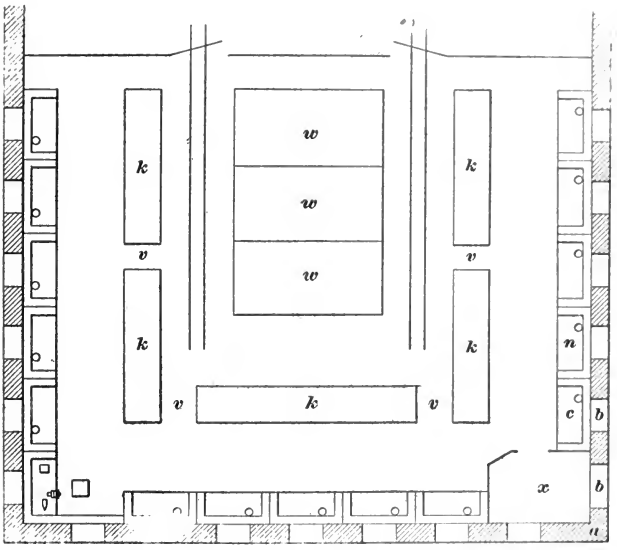

FIG. 11.

making is frequently done in rooms that are poorly lighted, overcrowded, and with very inferior equipment. In large foundries, and especially in those making specialties, the conditions are usually different. The importance of having good cores is here generally more fully recognized, as it is well known that poor cores are a source of considerable loss in molding. Items that may be small in small shops become

large in large shops, and systematic economy and the curtailment of unnecessary expenses are absolutely necessary to financial success. In Fig. 11 is shown the arrangement of a core room. It should, however, be understood that the general arrangement as well as the details depend entirely on existing conditions, and it is not expected that the equipment of any two rooms will be exactly alike. The core room is either a part of the foundry building or an annex to it. Hence, in a modern plant it has substantial brick walls, as shown at *a*, Fig. 11, with a good supply of light through large side windows *b* around three sides of the room. The room should have plenty of overhead air space and be equipped with some standard heating and ventilating system. It should have plenty of floor room for all the machines, benches, ovens, racks, etc., also an office for the foreman. Core rooms in foundries making extra large work are equipped with overhead traveling cranes, jib cranes, or both.

15. Core Benches.—The core makers' benches shown at *c*, Fig. 11, are arranged along the walls in front of the windows, so as to have an abundance of light. Such benches should be substantially built, and have shelves and bins for core rods and wires, and drawers for tools and brushes. The top of the bench should be large enough to hold a liberal quantity of core sand, and be fitted with a planed cast-iron plate. The core sand may be delivered through chutes *n*, which terminate about 1 foot or 18 inches above the benches. Irregular cores are mostly made by hand in special core boxes of wood or metal. The latter are preferable when large numbers of cores are required, as they will keep smoother than the wood boxes and are not so liable to get out of shape.

16. Core-Box Vise.—In Fig. 12 is shown an adjustable quick-acting vise or clamp for holding core boxes while the cores are being made. It is secured to the core-maker's bench *c*; two adjustable clamp screws *b* held in two movable arms *d* grip the core box *a*. Attached to the slide *g* is the

needle *f*, which is used to vent the core *i*. The needle is withdrawn from the center of the core *i* by moving the slide *g* by means of the handle *j*. The clamp screws move outwards and release the core box when the pressure is relieved from the foot-lever *l*.

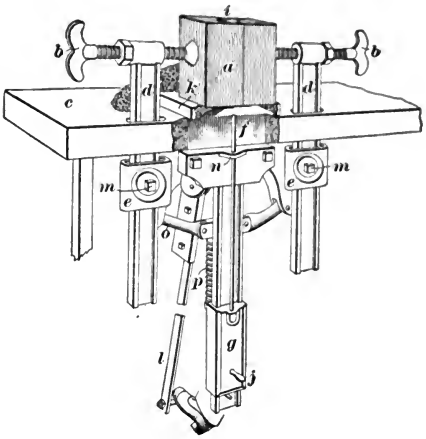

FIG. 12

17. Core Racks. A core room should have conveniently located racks, shown at *k*, Fig. 11, with ample storage capacity, equally accessible to the core makers and the oven tenders. They are preferably arranged between the core benches *c* and the ovens *w*, with a wide passageway on both sides. These racks consist of a series of open and narrow shelves that permit the cores deposited on one side by the makers to be reached by the men charging the ovens on the other side. This transfer shelf should be of the same height as the benches. The lower shelves serve for empty core plates, and the upper ones for finished cores. The racks should have passageways *v* between them at intervals, to allow free communication between the benches and ovens.

18. Core Plates.—The cores are placed on iron plates and deposited in an oven to be dried and baked. These core plates should have a true planed surface. If warped plates are used for drying the halves of pasted cores, it will be found necessary to rub the faces of the cores together until they make a good joint. But this practice is not to be recommended, as it will be found that such cores are usually out of shape and not true to size, and consequently will not produce satisfactory castings. Core plates should be drilled

with small holes countersunk on the lower side. These will aid both in the ventilating and drying, and decrease the weight of the plates. Cores of irregular shapes are preferably placed on drying plates with outlines of the same shapes as the base of the cores, as this will insure true cores.

19. Core Ovens.—Ovens for drying cores may be either portable or stationary, and consist of iron or brick

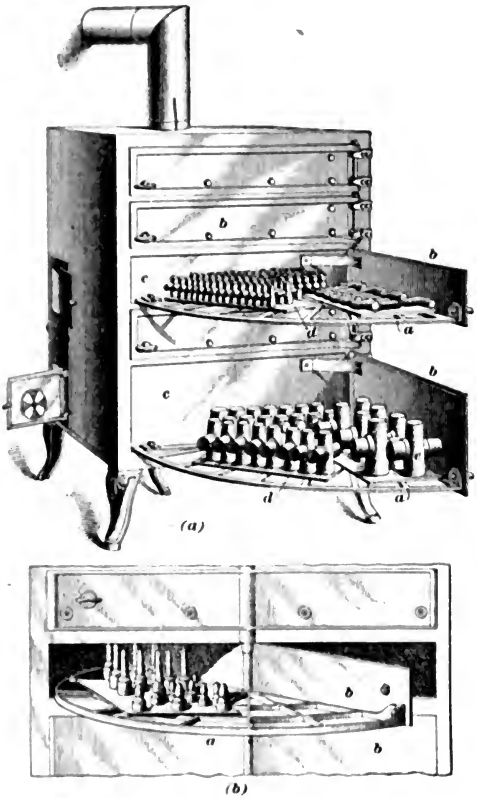

FIG. 13

rooms provided with racks and shelves, or tracks, and they should be arranged so as to be heated as easily as possible at

an evenly distributed and constant temperature. Ovens are fired with any of the ordinary fuels, but either gas or coke is preferable. A small portable oven is shown in Fig. 13 (*a*). It has shelves *a* fastened to the back of hinged doors *b*. The shelves are cast-iron gratings that allow a free circulation of the heat about the cores *e* that are on plates *d* in the oven. A baffle plate *c*, supporting the shelf and fastened to the door at right angles to it, serves to close the opening and prevent the loss of heat when the door is wide open. In another form of oven the shelf is hinged at the middle, as shown in Fig. 13 (*b*), and the door itself serves as the baffle plate and closes the opening when turned through a half circle from its original closed position. The hinged form of shelf is desirable, as it can be brought into a convenient position to receive the cores or to remove them from it. The body of such ovens is usually of sheet iron made double, the space between the inner and outer walls being either filled with some material that is a non-conductor of heat, or simply a closed air chamber that prevents quite effectively the loss of heat. The furnace is at the rear of the oven, and the flues are arranged so as to distribute the heat evenly to the shelves. The stationary form of oven having either hinged or stationary shelves is usually set in brickwork, and the furnace is located in the bottom or at the side, whichever is most convenient.

20. A stationary oven for drying small and medium-sized cores is shown in Fig. 14. It is made of cast-iron plates bolted together and supported by brickwork. The oven is closed by two hinged iron doors *a*, *a*; the cores *b* are placed on individual plates *c* and deposited on the shelves *d*, which are made of gratings to allow a free circulation of the heat. The furnace *e* is under one end of the oven and enclosed in brick with an ash-pit *f* below the floor. The heat and burned gases pass from the top of the furnace through the openings in the shelves and out the flue *g* at the upper corner of the farthest end. In another style of core oven, the shelves are arranged in the form of drawers equipped with rollers that

run on rails. The outer ends of the shelves, as they are drawn from the oven, are carried by trolleys running on overhead tracks.

For large work the ovens usually have shelves on the sides, and a wide space in the center provided with tracks on the floor to receive iron trucks on which the large cores are deposited; the trucks remain in the oven until the cores are dried. In some cases the trucks are loaded with the

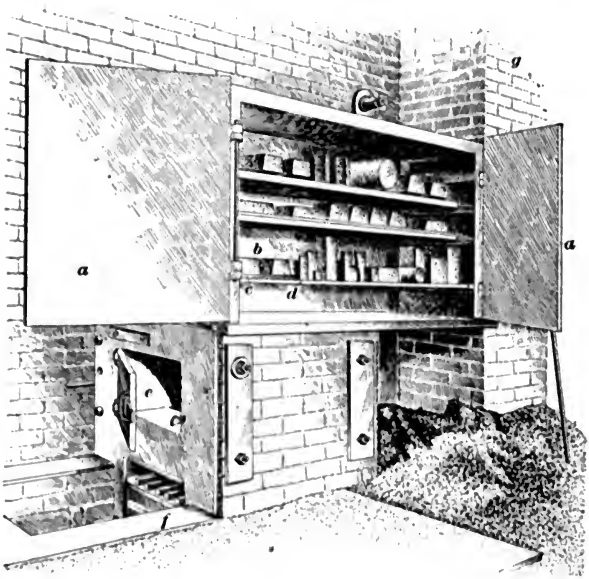

FIG. 14.

cores in the core room, while in others the trucks only move their own length, which is equal to that of the oven, and the cores are transferred to them from other trucks. In the latter case the door may consist of a large plate fastened to the rear end of the truck, which closes the opening automatically when the car is pushed into the oven. A baffle plate on the other end of the car will close the oven when the truck is on the outside, thus preventing the loss of heat.

The cars may be moved either by hand or mechanically. In some cases the doors open by sliding upwards between guides by means of chains and counterweights.

21. Antifriction Trucks.—Some form of antifriction or roller bearings requiring no lubrication is used on the iron trucks used in core ovens. In Fig. 15 is illustrated a truck without journal-boxes that is sometimes used for this purpose. The support for the car frame consists of a casting *a* having two lugs *b*, *b* at the ends, which serve as stops to prevent the axle *c* from rolling off the plate. The proper proportion of the parts should be such that the distance *d* between the center of the shaft in its two extreme positions is to the distance the car is to be moved on the tracks *e* as the diameter of the shaft *c* is to the diameter of the wheel *f*. Some style of antifriction truck is also used in the large core and drying ovens in steel foundries where the entire molds must be dried before the metal is poured. For the heaviest work, especially in annealing furnaces, the trucks are moved on smooth iron balls that are laid in V-shaped tracks, the supporting side frames of the trucks being of a similar form, but inverted so as to fit over the row of balls.

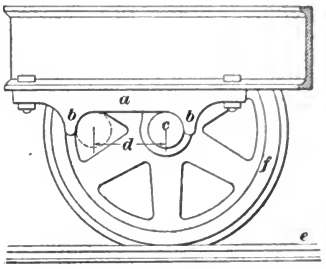

FIG. 15.

22. Machine-Made Cores.—It is only recently that any cores have been made by machinery. The fact that most of the cores are made by hand is, however, no good reason why they cannot be made better and cheaper by machinery, especially those cores with uniform cross-sections. But as yet there is no universal machine suitable for all conditions; it requires a greater variety of special appliances to produce the various shaped cores than it does to make the molds for the castings.

In Fig. 16 (*a*) is shown a machine for making cylindrical and prismatic cores of various uniform cross-sections. The machines are operated either by hand or by power. The machine illustrated consists of a base frame *a* supporting the movable parts and the vertical hopper *b* for holding the

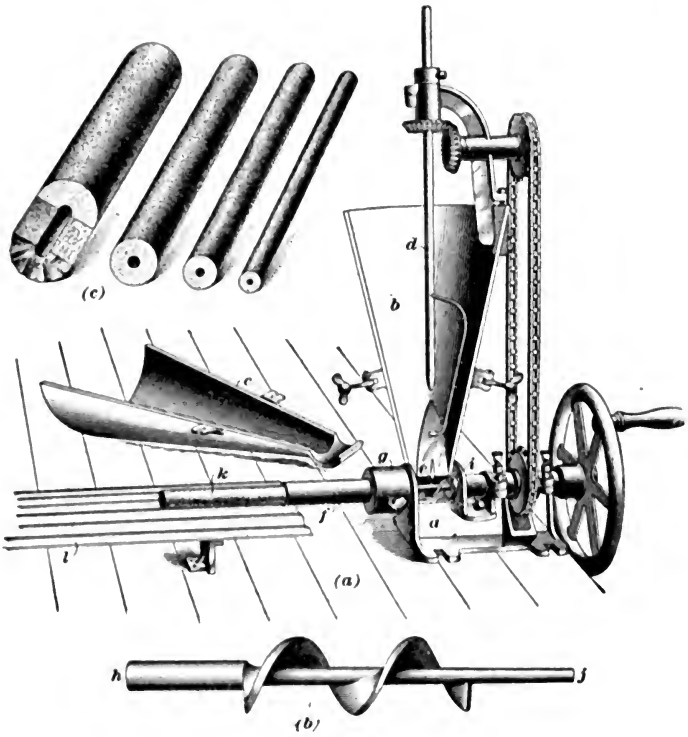

FIG. 16.

core mixture. The hopper is made with the one-half *c* removable, for convenience in cleaning and to aid in adjusting the feeder spindle *d* and changing the bit *e* in the machine. The bit is shown in an enlarged view in Fig. 16 (*b*). A tube *f*, having a hole of the same diameter as the core to be made, is fastened into the socket *g* by means of a setscrew. The machine is supplied with a set of tubes of different sizes

with bits to work with them. To operate the machine, a tube having the desired opening and a bit corresponding to it are selected; the tube is inserted into the socket *g*, and the shank *h*, Fig. 16 (*b*), of the bit is inserted into the socket of the crank-shaft *i*, Fig. 16 (*a*). The point *j*, Fig. 16 (*b*), of the bit extends into the center of the opening in the inner end of the tube *f*, Fig. 16 (*a*). The core material, which should be thoroughly mixed and sifted, is fed into the hopper.

23. The proportions of the mixture used in such a machine may vary considerably. In some work a mixture of the following proportions is satisfactory: 6 quarts of core sand, 1 quart of flour, and 1 gill of raw linseed oil; while for other work as much as 12 to 15 parts of sand to 1 of flour is used. The use of oil enables cores to be kept in stock indefinitely and also lubricates the machines. When the bit is revolved, it forces the material from the hopper through the tube and forms a continuous straight core vented from end to end through the center. The core *k*, Fig. 16 (*a*), is received on a metal tray *l* placed in a horizontal position under the outer end of the tube *f*; the shape of the grooves in the tray should conform to the form of the core. The core is cut into suitable lengths and dried in the oven. Fig. 16 (*c*) shows the sizes of some of the cores made by this machine.

24. Machines are sometimes used for making green-sand cores. The different machines vary greatly, in some cases simply consisting of adjustable boxes various portions of which can be quickly and easily withdrawn from openings in or removed from about the core when it is completed. In some cases special core barrels are also used, and the machines support these while the sand is rammed about them. In reality these green-sand core machines are simply molding machines used for molding green-sand cores, and they may be similar to any one of the several classes of molding machines described in *Machine Molding*.

25. In Fig. 17 is shown a hydraulic core-making machine designed for the production of cores of irregular cross-sections and of moderate sizes, as those required for molding

pipe fittings, cocks, valves, etc. The machine consists of a bedplate with a frame supporting a presser head *a*, a movable table *b*, which supports the molds and is carried upwards by the piston of a hydraulic cylinder *c* and guided by the

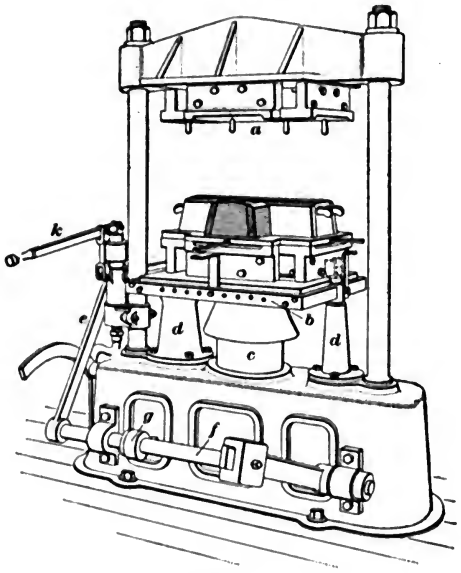

FIG. 17.

two telescope guides *d*, *d*. The table *b*, with the work on it, is raised into contact with the presser head by means of the hand lever *e*, which acts through the shaft *f* and arms *g*. The hydraulic pressure is then applied by means of the lever *k*, and the sand compressed to the desired hardness.

Fig. 18 illustrates the process of making the core required in casting the cock shown in Fig. 18 (*a*), the finished core being shown in Fig. 18 (*b*). The devices used to form this core in the press shown in Fig. 17 are shown in Fig. 18 (*c*). The core is made by first blocking out a body of sand equivalent in volume and approximately of the same shape as the finished core, and then pressing the sand into its final shape. The sand is blocked out by using a matrix *b*, Fig. 18 (*c*), in

addition to the customary half core boxes *a* and *c*, which has an opening corresponding to the outline of the core. The matrix is placed on the bottom half *c* of the core box, as shown in Fig. 18 (*d*), and the sand rammed into the opening. The matrix is then removed, leaving the sand as shown in Fig. 18 (*e*), and the upper half *a* of the core box put in its place and the sand compressed to the form shown in Fig. 18 (*f*). The completed core is shown on the bottom half *c* of the box in Fig. 18 (*g*).

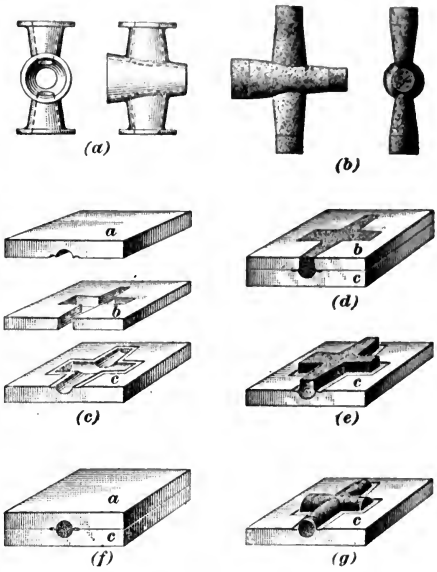

FIG. 18.

Owing to the heavy pressure used, the cores are considerably harder than those made by hand.

The three principal steps in the process are also shown on

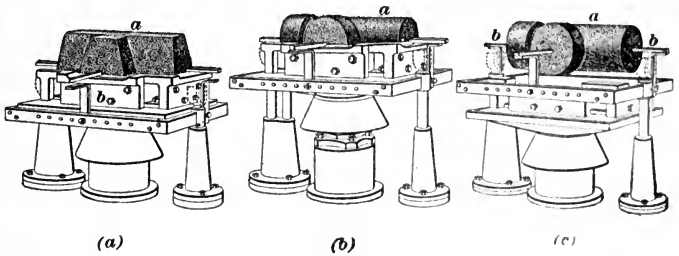

FIG. 19.

the table of the machine in Fig. 19 (*a*), (*b*), and (*c*). In Fig. 19 (*a*) is shown the compressed sand *a* resting on the lower

half of the core box *b* after the matrix has been removed; in Fig. 19 (*b*) is shown the sand *a* after the application of the top half of the core box, and Fig. 19 (*c*) shows the finished core *a* supported by the ends of the stiffening rods *b*, *b*, the lower half of the core box having been removed.

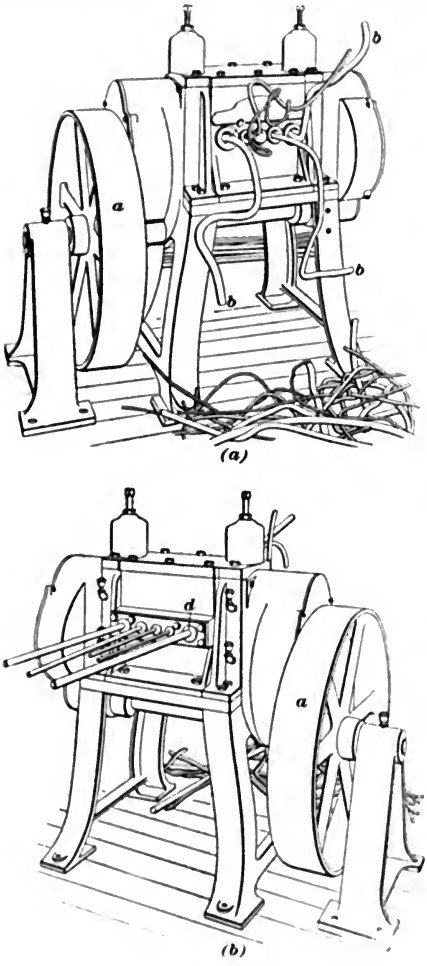

FIG. 20

26. Core-Rod Straightener. Core rods that have been used are nearly always crooked and in an unfit condition for storing, and it is desirable to have them straightened when they are returned from the molding floor. In Fig. 20 (*a*) and (*b*) is shown a machine designed for this purpose. The body of the machine contains a revolving straightening mechanism that is operated by means of a belt running on the pulley *a*. The crooked rods *b*, *b*, Fig. 20 (*a*), are made to enter the machine through hardened circular bushings *c* and pass out straight through similar bushings on the opposite side of the machine, as shown at *d*, Fig. 20 (*b*).

27. Wire-Cutter.—A wire cutter of the form shown in Fig. 21 is a useful machine for a core room. It consists

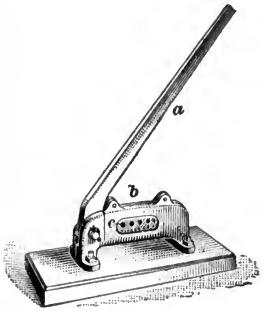

FIG. 21.

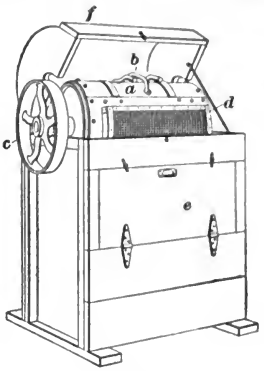

FIG. 22.

of a lever *a* that operates a shear blade *b* and cuts off the wire to any desired length when drawn through the holes *c*.

28 Rosin Grinder.—When rosin is used in core mixtures, it is necessary to prepare it by pulverizing the lumps. A machine for this purpose is shown in Fig. 22 and consists of a cylinder *a* with projections *b* on the outside, and which is made to rotate rapidly by means of a belt on the pulley *c*. The rosin is placed in a box *d* that is open on the inside and fits closely around the lower portion of the cylinder. The pulverized rosin passes through a screen in the bottom of the box *d* and is removed through a door *e*. The frame of the machine is made of wood and is enclosed in a dust-tight case. A hinged lid *f* covers the cylinder.

Another form of rosin grinder resembles a tumbling barrel. It is made of metal and is dust-tight. The lumps of rosin are pulverized in the barrel by means of two pieces of shafting, lying loose on the bottom, that roll against each other as the barrel revolves.

CLEANING-ROOM EQUIPMENT.

29. Methods of Cleaning Castings.—Flasks are shaken out as soon as the nature of the casting permits and piled up or distributed where most convenient for the molders;

the sand is cut up, freed from shot iron and fins, carefully mixed, and tempered ready to be used in new molds. The castings are picked out of the sand, the gates knocked off, and then delivered to the cleaning room. They are then cleaned from all adhering sand, cores and core arbors are removed, and gates and fins are chipped off; afterwards they are tumbled, sand blasted, or pickled, assorted, ground, weighed, counted, recorded, and placed in storage or shipped.

Large castings that are too heavy to be conveniently carried from one department to another are generally cleaned on the foundry floor, where they can be conveniently handled by cranes. The smaller ones are generally cleaned in tumbling barrels, pickling baths, sand-blast chambers, or sand-blast tumblers.

30. Pneumatic Chipping Hammer.—The hand cleaning on the bench and floor is done by means of hammers and chisels, steel brushes, pneumatic hammers, saws, emery grinders, etc. A form of **pneumatic chipping hammer** that is used for trimming castings is shown in Fig. 23 (*a*). It consists of an air cylinder *a* with a reciprocating piston to which is attached a chuck for the purpose of holding a chisel *b*. The compressed air that operates the piston is supplied through a hose attached at *c* at the end of the handle. A valve *d*, operated by the thumb, controls the

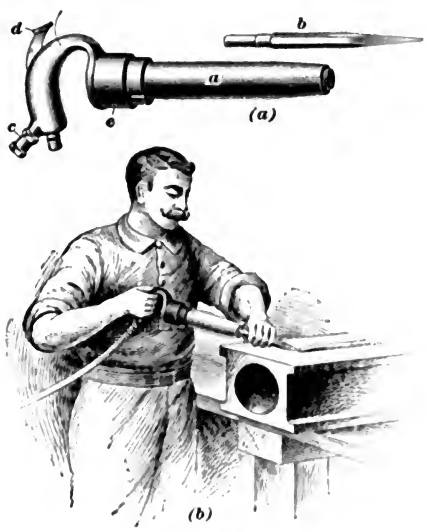

FIG. 23.

admission of the air for the purpose of starting and stopping the hammer. The construction of the hammer is such that the piston serves as a valve to control the admission of the air and its exhaust from the cylinder, and automatically reverses its motion at both ends of the stroke. After forcing the piston outwards, the air exhausts through the holes *e*. The hammer is held firmly in both hands, as shown in Fig. 23 (*b*), and the blows are struck very rapidly.

31. A **flexible-shaft emery grinder** is a very serviceable tool for cleaning castings. If placed on a truck

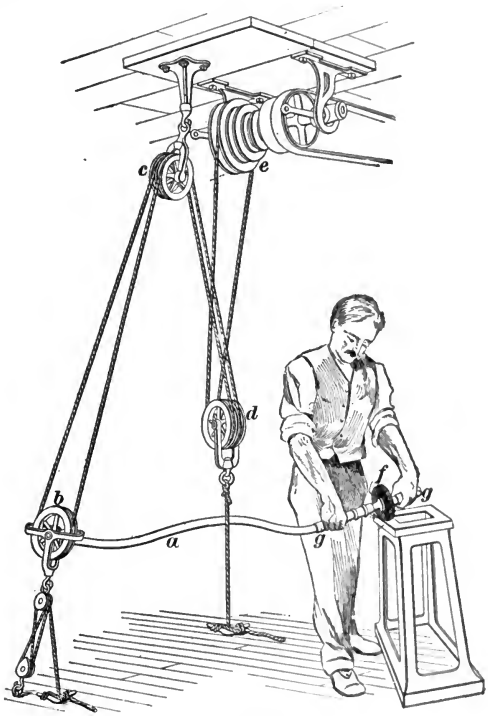

FIG. 24.

and driven by an electric motor, it may be easily taken about the molding floor and used to clean castings in a most

convenient manner. In Fig. 24 is shown a less portable arrangement, but one that is often used. The power is transmitted to the flexible shaft *a* through a rope drive. The pulley *b* may be moved to any location within the reach of the driving rope by changing the length of the rope attaching the idler *d* to the floor. The emery wheel *f* is held against the work by means of the two handles *g*, *g*. The flexible shaft is made by winding successive layers of wire in opposite directions about a center wire, as shown in Fig. 25, the outside being covered with leather.

FIG. 25.

32. A stationary emery-wheel stand of the form shown in Fig. 26, equipped with two emery or carborundum

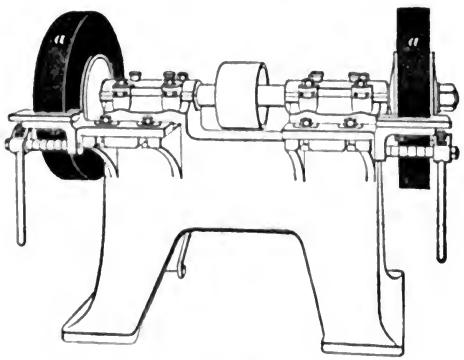

FIG. 26.

wheels *a*, *a*, is used in the cleaning room to remove fins and other small projections from the castings. It is belted to be driven either from above or below the floor. The latter method offers the least obstruction to the operator, as the belt is not in the way and is neater in appearance than the arrangement of overhead belting.

33. Steel brushes in a great variety of forms are used for cleaning sand, scale, etc. from castings and metal work.

In Fig. 27 (*a*) are shown three forms of cleaning brushes to be used by hand. They are useful in cleaning the parts of the castings that cannot conveniently be reached by means of other tools. A rotary steel-wire cleaning brush, which is driven by a belt, is shown in Fig. 27 (*b*). The driving shaft *a* carries a number of steel-wire brushes *b* that pass over the surface of castings held on the table *c*. The table is adjustable and is raised or lowered by means of a foot-lever *d*

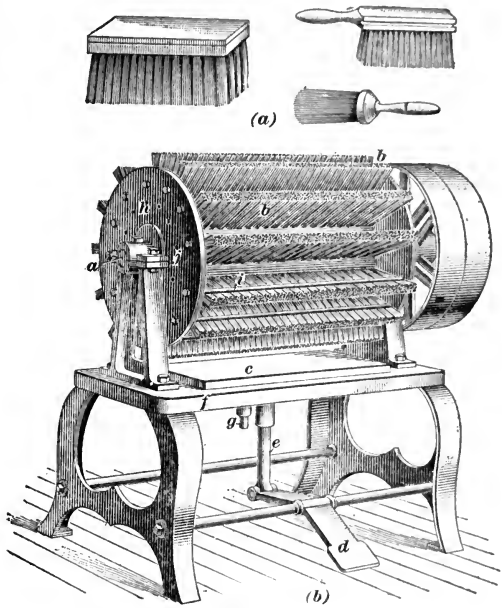

FIG. 27.

hinged to the rod *e* that passes through the frame *f* of the machine and is attached to the under side of the table *c*. The guide *g* aids in keeping the movable table central over the frame *f*. The driving shaft carries two disks *h*, *h* with rods *i* between them running along the rear side of each brush for the purpose of supporting the brushes; these supporting rods increase the life of the brushes considerably. When the

brushes become worn down to the supporting rods, the rods are moved to the inner row of holes *j* on the disks.

34. Machines for cutting gates and sprues from castings are used in the larger foundries, especially in those making brass castings. A belt-driven machine for this purpose is shown in Fig. 28, and consists of a rigid base and frame supporting the working parts, which in this case are in the upper portion of the machine. The sprues are removed from the castings by bringing them between the two steel cutters *a*, the lower one being stationary and the upper one having a vertical motion, produced by means of a lever and a cam on the driving shaft *b*. The pulley runs constantly, and the machine is started and stopped as desired by means of a foot-lever *c* that operates a clutch on the shaft.

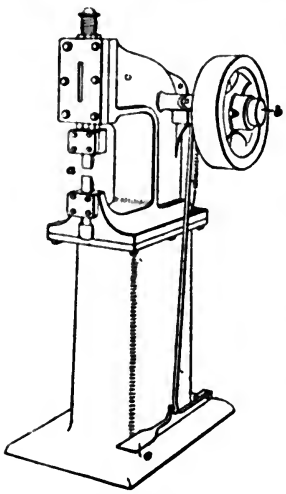

FIG. 28.

35. Sometimes **gate saws** are used to remove the gates from castings. The saws are operated either by hand or power. A band saw for cutting metals, especially brass, is shown in Fig. 29. The machine consists of a frame *a* with a bandwheel *b* driven by a belt on the cone pulley *c*. The saw *d* passes around the band pulley *b* and a similar one *e* held by a vertically adjustable bearing *f* at the top of the frame. The work is held on the table *g*. Guides *h*, *h* are placed both below and above the table for the purpose of supporting the back of the saw when the sprue is pressed against the cutting edge. The top guide has a vertical adjustment. The saw runs at a high speed and is very effective in its work. Hand saws operated by either one or two men are frequently used to remove gates, risers, etc. from large castings.

In foundries using a large number of wooden flasks, a machine for pulling nails from cross-bars is very useful,

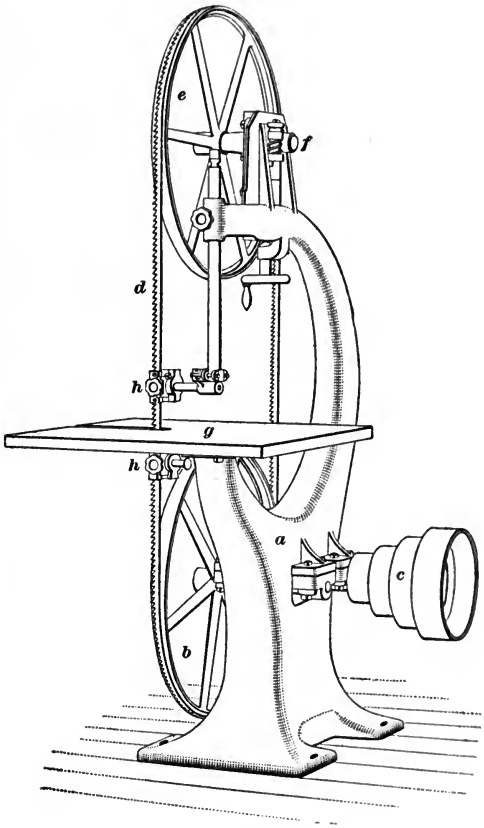

FIG. 29.

especially when combined with a small trip hammer for straightening the nails.

36. Small castings are cleaned in **tumbling barrels,** which are made in a great variety of designs. A plain type

of tumbler is shown in Fig. 30. It is belt-driven, and the heads *a*, *a* of the barrel have gears on their outer rims by

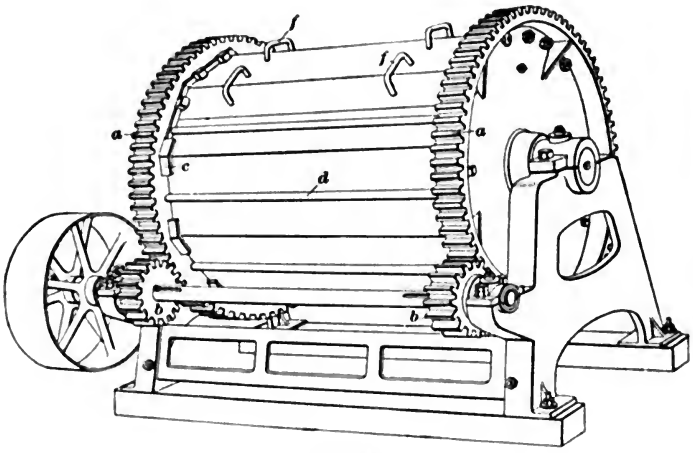

FIG. 30.

means of which motion is transmitted to them from the pinions *b*, *b* on the driving shaft. The staves are held in place by the lugs *c* on the inside of the heads. Tie-bolts *d* bind all parts securely together. The barrel is supported either by trunnions *e* at each end or by a shaft that extends through its center. One or more of the staves have handles *f* and are removable. The barrel is partly filled with castings, and some iron stars, shown in Fig. 31, or blocks of hard iron are added, leaving sufficient space for all the contents to tumble about when the barrel is in motion. The iron stars are sometimes cast with long points, which serve to dig the sand out of corners or holes in the castings. When the castings are thin and easily broken, it is better to use blocks of wood instead of the pieces of hard iron, to avoid breakage. In other cases it is preferable to fasten the castings to the inside of the staves to prevent their tumbling about and

FIG. 31.

damaging their corners and edges. The central space is then partly filled with smaller castings or stars, which, as the tumbler is rotated, clean the surfaces of the large casting. By this method very satisfactory cleaning is done.

37. Tumbling barrels are usually operated in pairs or in rows. In Fig. 32 is shown a row of tumbling barrels that

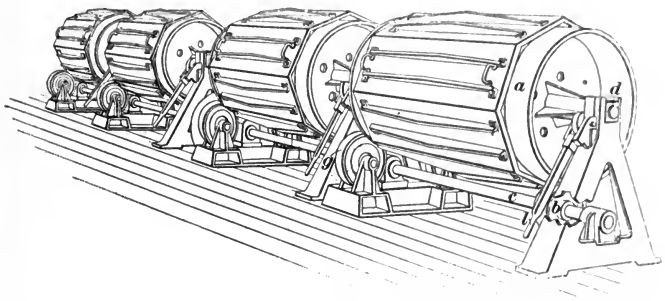

FIG. 32.

are rotated by means of friction rollers on a shaft running lengthwise under the barrels. The end of the barrel forms a flat-faced wheel *a* that rests on a friction roller *b* on the driving shaft *c*. The end of the barrel is kept in line by a cast-iron journal *d* projecting from the head. The bearing of the journal has a vertical movement and is raised or lowered by means of a lever *l*. The rotation is started by lowering the barrel and bringing the friction surfaces of the wheel *a* and roller *b* in contact with each other. The other end of the barrel rests on two antifriction rollers *g*, *g*, as shown in the illustration. Sometimes, however, the end of the barrel is supported by a trunnion that rests either on a bearing or on antifriction rollers supported on a pedestal. A tumbling barrel of this form can be lifted from its support and replaced by another one charged with castings. By having an extra barrel, this system allows the barrels to be filled and emptied on the floor, and the cleaning can go on continuously.

38. The process of dry tumbling causes large volumes of dust in the cleaning room, which is very destructive to the machinery and also makes it impossible for the workmen to remain in the room. To overcome this injurious feature, tumblers are sometimes equipped with an exhaust system to carry off the dust. In Fig. 33 is shown two

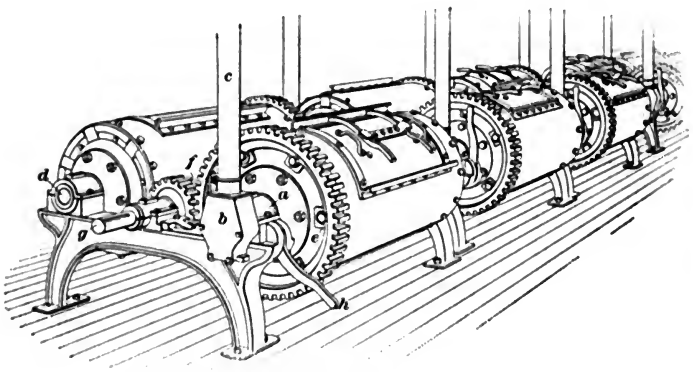

FIG. 33.

rows of exhaust tumblers working in pairs. A hollow shaft *a* at one end of the barrel connects, by means of an enclosed journal-box *b*, with a pipe *c* leading to a fan. The effect of the arrangement is to draw a strong blast of air in through an opening in the other end *d* of each barrel, and the dust is carried through the fan to a flue. Sometimes a water trap is inserted in the exhaust pipe *c* so as to retain as much as possible of the dust and prevent its destructive action on the fan.

The end of each barrel has a gear *e* on the outer edge that is operated from a pinion *f* on the driving shaft *g* extending the full length of the row. Each barrel is stopped and started by means of a lever *h* that moves the bearing of the hollow journal so as to throw the gear *e* on the end of the barrel either in or out of mesh with the gear *f* on the shaft.

39. Tumbling barrels are usually more or less open, and the loose sand, scale, etc. from the castings sifts through to the floor. In some cases the material is removed from the room by means of a **conveyer** running in a pit under the row of barrels. A conveyer suitable for this purpose is shown in Fig. 34 and consists of an endless rubber belt *a* running on idlers placed at intervals along its length. The idlers are arranged in sets of three. Those supporting the loaded part of the belt are arranged so as to give it the form of a trough. The middle idler *b* is horizontal and gives a flat bottom to the trough, while the two outside idlers *c*, *c* are inclined at a suitable angle to form the sides. The three lower idlers *d*, which carry the return loop of the belt, are on a horizontal shaft and the belt is flat.

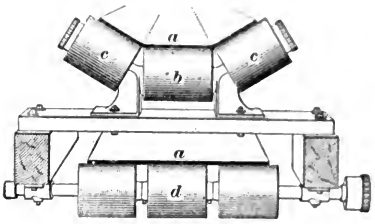

FIG. 34.

40. Oblique tumbling barrels are frequently used for small work. In Fig. 35 is shown a tumbler of this form that is arranged to be tilted and emptied. It is open at the top so that the condition of the castings may be seen during the cleaning process, and any of the castings removed or others added at any time without stopping the rotation of the barrel. The barrel *a* is made either of steel, brass, or wood, depending on the kind of castings to be cleaned. It is supported by a shaft *b* resting in bearings *i* at each end of a frame *c*, which is hinged at *d* and arranged to operate at different angles of elevation by means of a screw *e* and hand wheel *f*. The barrel is tilted for emptying by means of a rack *g* hinged at one end to the rear end of the frame *c* and operated by a gear on the shaft carrying the hand wheel *h*, the shaft being held by suitable bearings on the machine frame *l*. The barrel receives its motion from a friction roller *j*, which is on the shaft carrying the

pulley *k*, and turns against the outer edge of the bottom of the barrel.

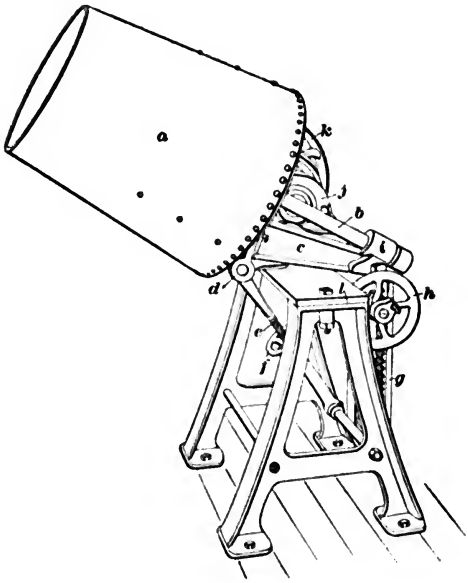

FIG. 35.

41. Brass and bronze castings are preferably tumbled in water. A barrel for this purpose is shown in Fig. 36.

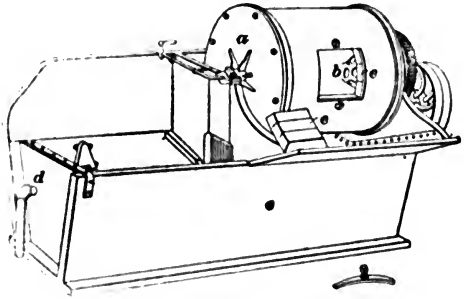

FIG. 36.

The water enters through the center of one head *a* and leaves through openings *b* in the other, carrying the sand

with it. The barrel is mounted over a trough *c* provided with an overflow *d*. The barrel is lined with oak staves *e*. A barrel of the form shown in Fig. 35 is also sometimes used for wet tumbling. Water tumbling barrels are very serviceable in cleaning iron castings and drop forgings that are to be plated, as the process produces a good clean surface.

42. Pickling Castings.—Castings that are to be galvanized, tinned, nickel plated, enameled, or painted should have a perfectly clean metallic surface so that the coating will adhere properly, and castings that are to be machined should be thoroughly freed from all sand to avoid the destruction of tools. Tumbling accomplishes this only with the plainest of castings without cores and with even surfaces. The cleaning of irregular castings can be done more perfectly by pickling or by means of a sand blast. In the pickling processes the castings are treated with dilute solutions of sulphuric or hydrofluoric acids. Pickling solutions for brass are generally prepared by mixing 3 parts of sulphuric acid to 2 parts of nitric acid, and adding to each quart about a handful of table salt. This mixture is used undiluted with water. Although this solution is used for the purpose of cleaning the castings, it leaves them with a good color, and it is therefore used more frequently for the purpose of coloring than for cleaning them. With brass the molding sand does not burn into the casting, and if it should adhere to the surface, it can be easily removed by plunging the castings, while still hot, into water. It is different, however, with iron castings. They must not be cooled suddenly, as this will change their structure, harden their surface, and is liable to crack them. Neither will the sudden cooling remove all the sand from iron castings, as it is often burned into the surface.

43. Sulphuric-Acid Solution.—Dilute sulphuric acid dissolves the iron and loosens the thin layer or particles of sand. Concentrated or strong sulphuric acid has no effect

on the iron, so that it is a mistake to make the sulphuric-acid pickling solution too strong. The solution is prepared by mixing 1 part of sulphuric acid with 4 or 5 parts of water. The mixing should be done slowly, with constant stirring, to avoid accidents, the acid being poured into the water, not the water into the acid. Sulphuric acid must be handled with great care, as it will burn the flesh and clothing. In case of accident, apply ammonia or soda, or wash immediately, using an abundance of water. When the acid is thoroughly cleaned off or neutralized, apply some healing lotion, such as collodion or a mixture of linseed oil and lime water, which should be always kept on hand ready for immediate use. The strength of the bath is easily maintained by measuring occasionally its specific gravity with a hydrometer, and adding more acid when the readings are too low. The solution should be kept in a lead-lined or pitched wooden tank of about 2 feet in depth, which is sunk 12 or 18 inches into the ground, and surrounded by a platform inclining toward the center. It is advisable to provide the bottom of the tank with a wooden grate made with wooden dowels and without iron nails or screws. If necessary, it can be weighted down with lead. This grating will permit the sand and sediment to fall to the bottom and leave a clear solution. A second tank, containing a hot solution of potash or soda, is kept near the first. It is used for a second dip, and its object is to neutralize the acid adhering to the castings; a third tank containing hot water, which is frequently renewed, is used for a final washing of the pickled castings. Castings placed into the pickling solution are usually cleaned in from ½ to 1 hour. If they are too large for the pickling vat, they may be placed on the inclined platform and some of the liquid poured over them from time to time, which will loosen the sand. Sometimes it is preferred to leave the castings for several hours, or over night, in the solution, and in such cases it should be made much weaker than the one first described. One part of acid to 10 or 15 parts of water will make it fully strong enough if used in this manner. This

pickling solution will not work well when cold, and all sulphuric-acid solutions will work best when heated. In order that no acid may remain in the pores of the iron, the castings should be well washed in clean hot water and immersed in an additional bath of a hot alkaline solution, after which they should again be rinsed in hot water.

44. Hydrofluoric-Acid Solution.—Hydrofluoric acid acts in a different manner from sulphuric acid. It does not attack the iron, but dissolves the sand and the underlying oxide of iron. The strength of the solution varies with the time in which the castings are to be finished. A proportion of 1 part of 30-per-cent. acid to 20 parts of water will generally prove satisfactory. If 48-per-cent. acid is used, a mixture of 1 gallon of acid to 30 or 40 gallons of water will give the same results. The solutions should be well stirred and used cold, but it must be kept above the freezing point. It will clean castings in from $\frac{1}{2}$ to 1 hour. Weaker solutions act slower. The bottom of the bath should frequently be cleaned from sediment or the acid will quickly lose its strength by dissolving the loose sand.

Castings pickled in dilute hydrofluoric acid should be rinsed in hot water as soon as removed from the acid. If washed in cold water, they will remain wet for some time and will rust. The addition of some alkaline substance, as lime, potash, or soda, to the hot-water bath will be found very serviceable.

Hydrofluoric acid must be handled with great care, as it will cause painful inflammation if it comes in contact with the skin. An application of dilute ammonia will best neutralize the acid on the skin or clothing. Water should be used freely to wash off the acid. Rubber gloves protect the hands from dilute acid.

45. Sand Blast for Cleaning Castings.—The method of cleaning castings by the sand blast involves the use of an air compressor in connection with an air chamber and a sand reservoir. The process consists of throwing a stream of fine

sharp sand by means of a current of compressed air against the surface of the castings to be cleaned. The rapidly moving sand cuts away all the sand and scale from the castings

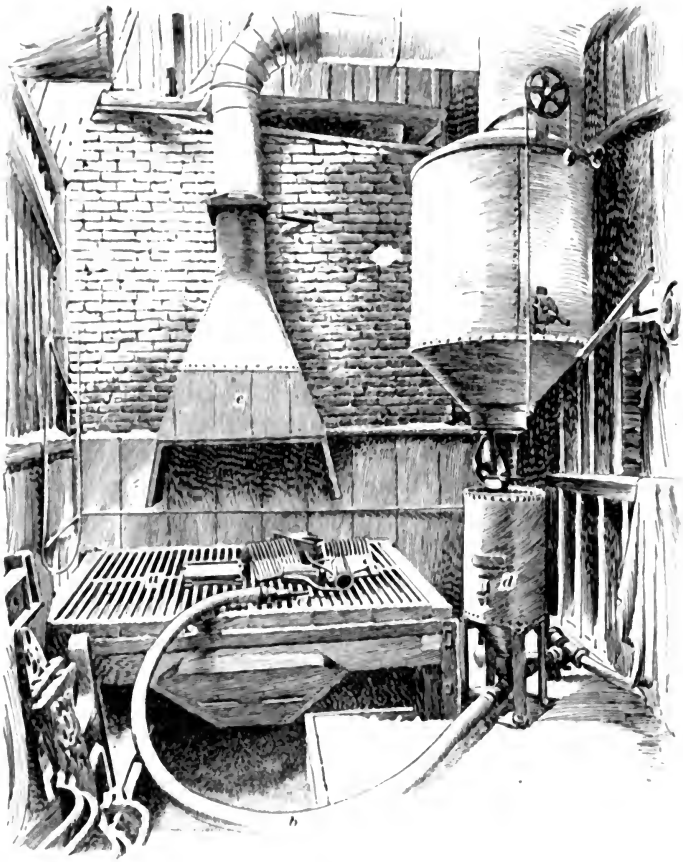

Fig. 37.

and leaves the castings with a clean, smooth surface. The results obtained by this process are better than those of any other method, but it is more costly. Fig. 37 illustrates

a room equipped with sand-blast apparatus for the purpose of cleaning castings. The castings are placed on a grating *a* placed over the opening of a large hopper that directs the sand to a conveyer. A rubber hose *b* terminating in a nozzle *c* leads from the air-pressure tank *d* to the grating. A valve controls the flow of sand and air into the hose. The cutting quality of the issuing stream is so great that it is not a difficult matter to remove lumps and irregularities from the castings. The surfaces of castings cleaned in this way have a white, silvery appearance, and they are in the best possible condition to receive coatings of enamel, paint, or plating. This method of sand-blast cleaning is also applied to structural-steel work to prepare the surface for repainting. The grating *a* is covered by a hood *e* connected with an exhaust fan to draw up the dust. It performs this duty to a slight extent, but not nearly enough to make the application of other safeguards to the operator unnecessary It is dangerous to the health of an operator to work for any length of time in a sand-blast cleaning room without being protected by a respirator and helmet similar to that shown in Fig. 38. The helmet encloses the head of the operator. It is made of cloth and metal, and has an opening *a* covered by some transparent material, such as fine-wire gauze, celluloid film, or glass. Air is forced into the top of the helmet through a hose *b*, and passes out through the loose portions at the bottom. By making use of these appliances there is little danger to the health of the operator from the dust.

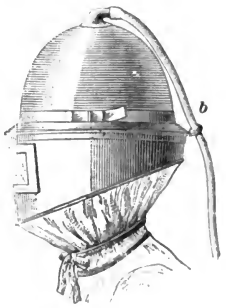

FIG. 38.

46. Sand-Blast Tumbling Barrels.—Another application of the sand blast is shown in Fig. 39 wherein the blast is directed into a slowly revolving tumbling barrel *a*. The castings are placed in the barrel, and the tumbling continually exposes new faces to the action of the blast. The barrel

rotates very slowly, and the method is suitable for light and fragile castings, as there is little danger of breaking them. The sand blast is introduced through the hollow trunnion at one end of the barrel by means of a hose *b* from the pressure tank. After the barrel has been closed, and also further protected by closing the sliding door *c* of the outside case, it is set in motion. When it has been running for from 25 to 45 minutes, the castings are perfectly clean and present bright surfaces and clean edges. The ends of the barrel rest on friction rollers *d* on two shafts that are driven by means of gears *e*, *e* meshing with the worms *f*, *f* on the driving shaft *g*.

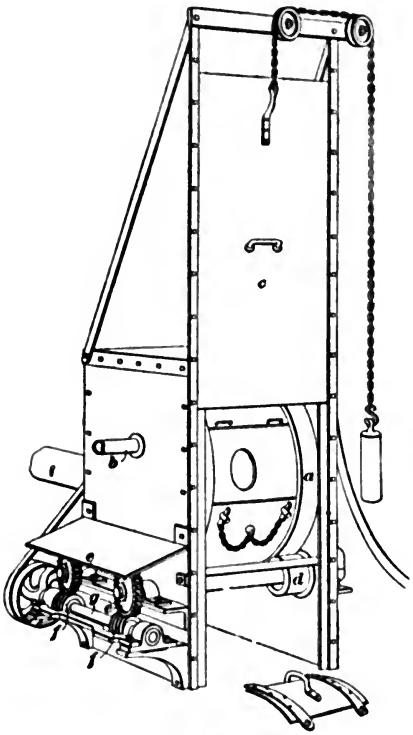

FIG. 89.

47. Cinder Mill.—A cinder mill is sometimes used to remove the iron from the cupola cinder and foundry scrapings. One style of machine for this purpose is shown in Fig. 40 (*a*), (*b*), and (*c*). This mill consists of a sheet-metal barrel *a* supported on hollow trunnions *b*, *b'*, and arranged so that it may be revolved by means of a large gear *c*, on the outer edge of one end of the barrel and a pinion *d* on the driving shaft *e*. A centrifugal pump, operated from the driving shaft *e* by means of bevel gears *f*, forces a stream of

water from a catch basin under the mill into the barrel through the trunnion *b*. The dirt and water are discharged through the trunnion *b'*, Fig. 40 (*b*), into a wheelbarrow having a wire-cloth bottom; the water returns to the pump, the dirt remains in the barrow, and the coke is carried over the barrow and collected by means of a coke screen.

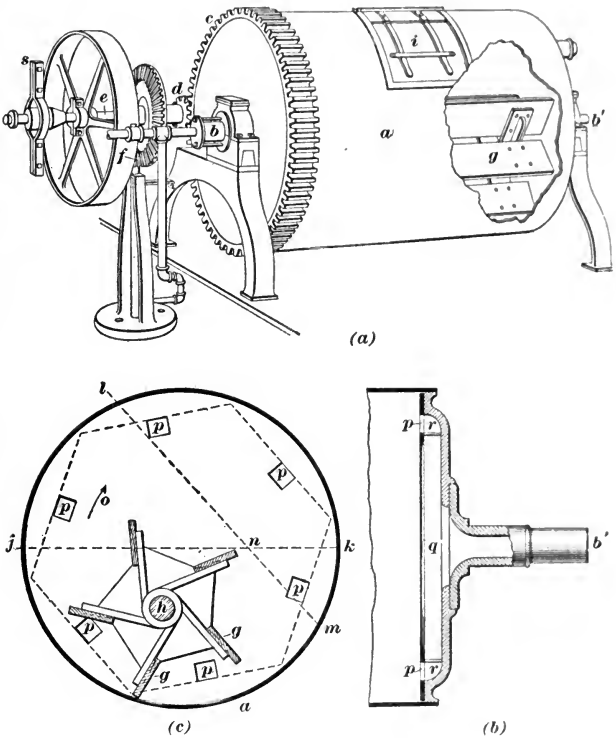

FIG. 40

The barrel contains a crusher that consists of five pieces of plank *g* attached to a metal frame and shaft *h*, Fig. 40 (*c*). The crusher, whose diameter is slightly greater than half that of the barrel, rests on the bottom of the barrel and revolves when the barrel revolves, by means of the friction

between the shell *a* and the vanes *g*. The material is placed in the barrel *a*, and the iron is removed through the door *i*. When the machine is in operation, the water stands approximately on a level with the center of the barrel, as shown by the dotted line *j k*, Fig. 40 (*c*), and the material is carried around by means of the friction between it and the shell *a* until its surface forms a slope, the angle of which depends on the speed of the barrel, shown by the dotted line *l m*. The water surface line *j k* crosses the cinder slope line *l m* at *n*, thus leaving a channel *k m n* through which the water passes from one end of the barrel to the other. As the mill revolves in the direction of the arrow *o*, the cinder is ground under the vanes *g* of the crusher and carried to the top of the slope *l* and dropped into the water at *n*. The iron and heavy material go to the bottom, while the lighter portions are suspended and carried by the current of water in the channel *k m n* through the ports *p* into the separating chamber *q*, Fig. 40 (*b*). If any heavy cinder enters the chamber *q*, it falls to the bottom and is returned to the barrel through the port *p* above the cinder line *l m*, by means of the buckets *r* attached to the inner edge of the ports *p*. The refuse passes out with the water through the trunnion *b'*. The mill is stopped and started by means of a friction clutch *s* on the driving shaft *e*, Fig. 40 (*a*).

MALLEABLE CASTING.

(PART 1.)

MALLEABLE CAST IRON.

PROPERTIES AND COMPOSITION.

INTRODUCTION.

1. A **malleable casting** is an iron casting of special composition that has been rendered malleable by subsequent continued annealing. The casting, before it is annealed, is very hard and brittle, and as its fracture has a distinctively white appearance, the iron of which it is composed is known as **white iron,** to distinguish it from ordinary cast iron, which has a gray fracture and is known as **gray iron.** The white iron also contains carbon in a form known as *combined carbon,* which will be considered fully later on. In the process of annealing, this carbon is changed to an amorphous, or uncrystallized, form, although not a graphitic carbon found in gray iron, to which the name *temper carbon* has been given. After annealing, the casting can be twisted, bent and hammered, hot or cold, while its strength is more than doubled.

PHYSICAL PROPERTIES.

2. The **tensile strength** of a good piece of malleable cast iron, frequently called simply **malleable,** should lie between 37,000 and 45,000 pounds per square inch. Castings that show 35,000 may be used, and many are made that

COPYRIGHTED BY INTERNATIONAL TEXTBOOK COMPANY. ENTERED AT STATIONERS' HALL, LONDON

run as high as 52,000 pounds per square inch, but this high tensile strength is obtained at the expense of resistance to shock. These high results are secured by adding from 2 to 5 per cent. of steel scrap to the regular mixture in the open-hearth furnace.

3. Ductility.—The elongation of a malleable casting should lie between 2.5 and 5 per cent.; the thicker the piece, the smaller is the elongation. Tests are usually made on bars .8 inch in diameter, not turned down, and the elongation measured by pricking center-punch marks along the whole bar at intervals of an inch. After the bar has been pulled apart, the two parts are fitted together and the extension measured between the two marks on both sides of the mark nearest the fracture, which were originally 2 inches apart.

4. The **transverse,** or **bending, strength** of a malleable casting should be such that it will carry a load of between 3,500 and 5,500 pounds, the load being applied at the middle of a bar 1 inch square, supported at its ends, upon supports 12 inches apart. The deflection from the horizontal should be at least $\frac{1}{2}$ inch, but very good and soft iron often gives a deflection of $2\frac{1}{2}$ inches.

5. The **resilience,** or resistance to shock, of the average malleable casting is about 8 times that of cast iron and half that of steel. This is true for powerful shocks not often repeated. For continued light shocks, as in railroad service, a malleable casting is superior to one made of steel.

6. Effect of Temperature of Molten Iron.—In making the hard castings, that is, before they are annealed, it is necessary to have a white fracture, or only mottled very slightly, otherwise the annealing will spoil the work. In order to obtain a white fracture the iron must be chilled in the mold. It is known that thin sections chill much more quickly in the sand than thick ones; a thin piece may therefore set at once and show a perfectly white-glass hard fracture. The same iron, however, if run into a section, say,

2 inches thick, will cool slowly and result in a perfectly gray casting. This gray casting when subjected to the annealing process will come out "rotten," being burned and disintegrated throughout.

The temperature of the melted iron, or bath, must also be observed. A hot iron chills better than a comparatively cold one. Thus, a casting $1\frac{1}{2}$ inches thick may be poured from the hottest part of the bath and have a white fracture, while the same casting poured from the first of the tap, or the coldest iron, may be perfectly gray. If the iron is dull, therefore, all the thin castings that can safely be run, should be poured; if the iron is very hot, the lightest work should be poured first to avoid spoiling the work; the heaviest should be taken next, and finally the medium-weight castings should be poured.

While it is essential to have the iron at a suitable temperature for the castings to be poured, care must be taken not to prolong the heat more than is necessary, as long-continued heating causes changes in the composition of the bath by carrying off the silicon and carbon.

7. The **contraction** in hard castings is approximately $\frac{1}{4}$ inch to the foot. As, however, in the annealing process some of this is restored in some cases as much as one-half, the ordinary shrink rule for gray iron is frequently used for patterns for malleable work also. It is well, however, to keep close watch of the behavior of the various castings that are made in quantity, and to have the patternmaker correct the pattern for any variations that are noticed regularly. It is recommended by some engineers that an allowance of $\frac{3}{16}$ inch per foot be made for all patterns, and that after a trial such alteration be made as may seem necessary from the castings thus produced.

8. Shrinkage in hard castings must be carefully watched. Wherever there is a thin flange next to a heavy section, the thin part solidifies first, and draws away the metal, which is still fluid or plastic, from the heavy mass next to it, resulting in a hole or spongy spot in the thick

portions of the casting. The same is true of a sharp angle; there is generally a line of spongy iron just where it should be strongest. This is not to be wondered at, as the excessive shrinkage of white iron makes it much more difficult to get sound malleable castings than gray-iron ones. The means of prevention are the use of fillets wherever possible, the application of chills of gray or white iron in the worst places, and care in making and handling the mixture.

CHEMICAL COMPOSITION OF MALLEABLE IRON.

9. Elements Contained in Malleable Iron.—The elements found in malleable cast iron are the same as those in gray iron, but vary in quantity and in their distribution. The composition of good malleable iron should be within the limits indicated in the following table:

Silicon	.35 to 1.25 per cent.
Manganese	.15 to .30 per cent.
Phosphorus	.08 to .25 per cent.
Sulphur	.02 to .07 per cent.
Total carbon	1.50 to 4.20 per cent.

All other elements remaining between the limits given, the variation of the silicon must be closely watched; .35 per cent. is used for the heaviest casting of thickest section, and 1 per cent. for the lightest work. In average practice the percentage of silicon usually lies between .5 and .7 and the total carbon is sometimes even lower than 1.5 per cent.

10. Silicon is the most active agent in the malleable mixture. A bath of iron having 1 per cent: of silicon and other ingredients normal would make good white castings $\frac{3}{8}$ inch thick or less, mottled castings up to $\frac{1}{2}$ inch thick, and be liable to make gray ones in thicker work. A bath with .35 per cent. of silicon will make a piece even 2 inches thick nearly white, if cast hot enough, and would be suitable for all castings were it not desirable to make smaller work with a higher percentage of silicon owing to the difficulties

encountered with cold iron and excessive shrinkage. For coupler work, therefore, the bath should contain from .35 to .55 per cent. of silicon; for ordinary castings averaging ½ inch in thickness, from .45 to .75 per cent., preferably .6 per cent.; for pipe fittings and agricultural work, from .75 to 1 per cent., preferably .8 per cent.; and for saddlery, hardware, scissors, and the lightest castings it may contain from 1 to 1.25 per cent.

Samples of iron should be furnished the laboratory for the purpose of determining the percentage of silicon of the heats. These samples should be taken from about the tenth ladle, and again at the end of the heat. The iron for these is poured on a stick of wood laid across a pail of water, and made to run from the stick into the water. This causes it to form into small spherical drops, resembling shot, and is said to *shot* it. The water should be thrown off quickly, and the sample dried in a hot ladle, thus leaving clean dry shot, which is then pounded fine in a steel mortar, by the chemist, and the silicon determination made.

11. Manganese.—Of the various constituents of a bath of iron, manganese burns out first. Pig irons seldom contain more than .8 per cent. of manganese, and this is reduced to from .15 to .3 per cent. in the casting. Too much manganese in the mixture should be avoided, as the expense involved in burning it out is quite great. The excess of manganese is paid for as iron, and .5 per cent. burned out means in itself a loss of 7 to 10 cents a ton. Manganese, also, in burning out, protects the silicon for a time, thus prolonging the heat, and if the temperature is high enough, it helps to remove the sulphur. If present in too great a quantity, say about 1.5 per cent., it hardens the iron and causes trouble in the annealing. For these reasons it is advisable in purchasing pig iron for a malleable-iron foundry, to specify that it shall have from .5 per cent. to .6 per cent. of manganese, and refuse all containing over .8 per cent. unless it is to be mixed with other irons low in manganese. Iron high in manganese may, however, in the absence of other iron, be

used without mixing with irons low in manganese, by skimming the bath frequently and allowing the manganese to burn out. The purpose of the skimming is to maintain a clean surface so that the manganese may be freely oxidized.

12. Sulphur, which is generally known as the enemy of the founder, is a very important factor in the malleable-iron industry, and special efforts must be directed toward keeping it out. In the days of charcoal irons this was easily done, but at the present time blast furnaces making Bessemer iron try to dispose of their bad casts (generally known as *off casts*, or *off heats*) to malleable works, so that too great care cannot be exercised in the purchase of iron. When a blast furnace is not working well, scaffolds—masses of ore, fuel, and flux that bridge over the furnace—form, the limit of .1 per cent. of phosphorus is exceeded, and the sulphur goes above .05 per cent., so that the steel makers cannot use it. In fact the sulphur will be found to be .09 per cent. more often than .05 per cent., and if this material is used in the malleable foundry, serious trouble results in annealing, and even in the foundry. It is therefore advisable to insist on having the analysis of irons for sulphur made by the oxidation method, as this method accounts for all the sulphur in the iron; the easier evolution methods, used by many chemists, often miss as much as half the sulphur present. Sulphur so weakens the iron that it is not able to resist the internal strains always present in the hard castings, and cracked castings are produced. The cracks in the hard casting are before annealing often visible only under the microscope, but they are brought out by the annealing process and subsequent finishing. Sulphur furthermore increases the difficulty in annealing. It makes it necessary to subject the castings to a higher temperature and to maintain the heat for a longer period, which in turn causes greater damage to the castings. Good castings have been made with .1 per cent. of sulphur, but this is the exception and not the rule. It is best to use irons that contain not more than .04 per cent. of sulphur, and preferably not over

.02 per cent. When the mixture contains .05 per cent. of sulphur, or over, it may be smelled at the spout of the furnace.

13. Phosphorus seldom causes trouble in the manufacture of malleable iron, as the irons ordinarily bought do not contain more than .175 per cent.; charcoal irons, however, often contain more than .2 per cent. Iron containing more than .25 per cent. should not be used, for the castings are liable to be cracked and warped; besides they will be unable to resist the heat of the annealing oven. The melting point of the iron is lowered by the presence of much phosphorus, and it will therefore oxidize considerably in annealing.

14. Carbon.—In malleable-iron work three forms of **carbon** must be dealt with—*combined carbon*, *graphitic carbon*, and *temper carbon*.

Combined carbon is carbon that has entered into chemical combination with the iron. It is subdivided into three or four forms, but these do not interest the malleable-iron founder. Hard castings should have all their carbon in the combined form. The fracture of this class of iron is white, somewhat resembling the color of silver, shows distinct crystallization, is as hard as tool steel, but is very brittle. The amount of combined carbon in malleable castings varies between 1.5 and 4.2 per cent. When charcoal iron was generally used, and it is still used in some sections, as in the Lake Superior region, 4.2 per cent. carbon was very common. The advent of coke irons into the field, however, caused a drop in this element, which drop has since been increased by the addition of low-carbon steel clippings to the mixture. The percentage of combined carbon cannot run much above 4.2 per cent., as the iron is then nearly saturated with carbon; but on the other hand, it must not be allowed to fall below 1.5 per cent., otherwise the castings will not anneal properly. A sharp crystalline outline is an indication of good iron; a mushy, indistinct structure usually means weak, oxidized, unfinished metal.

15. Graphitic carbon in a malleable casting is undesirable because it opens the structure; this causes the

oxidation in annealing to penetrate the iron and weaken it. If the amount of graphitic carbon present is sufficient to make the fracture of the hard casting so mottled that it shades into a light gray, the annealed piece will come out weaker than if it were an ordinary gray casting. Attention to the percentage of silicon, temperature of the bath, and details of pouring, will, however, avoid this trouble.

16. The name **temper carbon** was given to this form of carbon by Professor Ledebur, a German authority, who finding it only in malleable castings, which in German are called *tempergus*, called it "temper" carbon. It is only produced by converting into pure carbon the combined carbon of white castings. In doing this, the casting expands, frequently, about one-half of the original contraction in cooling in the mold. A network of soft steel is formed around the particles of carbon and acts as a cushion to blows and allows the piece to bend. The iron itself, being combined with nearly 4 per cent. of carbon, now becomes freed of about 3½ per cent. of it and therefore becomes a steel. The malleable casting is then really a piece of soft steel, but with about 3½ per cent. of carbon placed between the chains of crystals of iron, weakening it correspondingly, but leaving it twice as strong as cast iron. Temper carbon is not present in flakes like graphitic carbon.

The annealing process effects this remarkable change, which goes on whether the castings are packed in an oxidizing medium or in sand or fireclay. While the total carbon is distributed evenly in the hard casting, it is not so in the annealed piece. There is a removal of carbon from the skin of a malleable casting, which extends inwards about ¼ inch. Herein a difference between American and European practice exists. In American practice the annealing process is continued only until the combined carbon is changed to temper carbon, while in Europe the annealing is continued until the greater part of the carbon is removed; this can be done only with thin castings, the fracture of which will look like a piece of broken wrought iron. American castings

have a velvety-black interior, a light-gray band at the surface, and a thin white skin; for this reason Europeans call American malleable castings *black heart*.

IRONS USED IN MAKING MALLEABLE CASTINGS.

17. The **pig irons** used in malleable-iron castings may be either charcoal or coke irons. Charcoal irons are the best, owing to their greater freedom from oxidation. In other respects coke irons make equally as good malleable-iron castings.

Charcoal pig irons used for this work are all made by the warm-blast process, the cold-blast iron being entirely too expensive. Charcoal irons are used now only in the Lake regions where the blast furnace is near the foundry, and freight charges are not too great. The cost of the charcoal irons is higher than that of the coke irons and the latter are therefore generally used, except in localities where the difference in cost is offset by the relative freight rates, or other conditions that may enter into their use. When charcoal irons are used they are usually of grades running from No. 1 down to No. 6. Nearly all these irons are now sold by analysis, and the following table will show the percentages of silicon usually found in each.

TABLE I.

AMOUNT OF SILICON IN CHARCOAL IRON.

Grade of Iron.	Percentage of Silicon.	Grade of Iron.	Percentage of Silicon.
1	1.25 to 1.50	4	.50 to .75
2	1.00 to 1.25	5	.30 to .50
3	.75 to 1.00	6	.10 to .30

In the market, each number has three subdivisions, as, for instance, No. 2 soft, No. 2 medium, and No. 2 hard. In

the table, the upper limit of silicon corresponds to the soft, the lower to the hard, and a point midway to the medium. These grade numbers are, however, gradually disappearing, and for malleable purposes coke irons, having been introduced by trained metallurgists, are bought only by analysis.

18. Many malleable works have stocks of all numbers constantly on hand. This is not necessary, for the higher numbers are used only in case the castings come out a little gray. With well-regulated mixtures for light work, such as agricultural castings, the stock in the yard should be about as follows: Pig iron running 1.5 per cent. silicon, one-eighth of the entire stock; 1.25 per cent , one-half of the stock; 1 per cent., one-fourth of the stock; the remainder should have .75 per cent. silicon. For the heavier grades of castings the relative proportion of irons containing 1.25 and 1 per cent. of silicon are reversed. A stock book should be kept and the quantities of iron required, which quantities are determined by experience, ordered periodically, so that no shortage may occur at a critical moment.

19. Coke pig iron is known in the market under various names—malleable coke and malleable Bessemer are the most common. The malleable coke irons are made especially for the malleable-iron trade and are usually very good. Malleable Bessemers are unsafe, as they are usually made up of bad heats, as has already been explained. When making a test of a given grade of iron, the mixture should contain as much of the iron on trial as possible; the gates from the heat should be kept separate, and also the bad castings. Another heat should then be made with the same mixture and the test bars broken. If the results are up to the average, it is advisable to buy the iron; but if the results are not up to the average, it should not be bought.

The specifications for the four varieties of pig iron kept in stock, whether charcoal or coke, should be as follows: Silicon, (*a*) 1.5 per cent., (*b*) 1.25 per cent., (*c*) 1 per cent., (*d*) .75 per cent.; manganese, not over .8 per cent. for all grades; sulphur, not over .04 per cent. for all grades;

phosphorus, not over .225 per cent. for all grades. In some cases, however, the percentage of manganese is made as low as .4 per cent. instead of .8. Specifications for carbon are not necessary, and it is desirable to get the sulphur as low as .20 per cent., if possible, and the phosphorus down to .1 per cent. A leeway of .05 per cent. of silicon is allowable either way. In piling the iron in the yard, it is advisable to spread a car load in line on the ground, then spread each successive car load of the same analysis on top. In using the iron, it should then be drawn from the end of the pile. In this way a good average of the iron is obtained, poor car loads are mixed with good, and the composition is kept uniform.

20. The **scrap** produced in the malleable-iron foundry is of two kinds: *hard*, or *unannealed*, *scrap*, which includes the gates and scrap castings that come from the trimming room, and *malleable scrap*, or annealed material from the finishing rooms, and that bought, or for which good castings have been exchanged.

Hard scrap should be tumbled in the tumbling barrels to clean off all the foundry sand that may adhere to it; this saves fuel in melting and leaves the bath cleaner. It is important to have this scrap, or **sprues**, as it is called in malleable-iron foundries, well mixed; that is, if two or more heats are made, the scrap from all these should be well mixed, because if any one heat should be burned, the scrap from it, if it went entirely into one heat, would spoil that also. When scattered through the scrap of several good heats, however, the bad effects are reduced and eventually disappear.

Annealed scrap, which has in the past only been fed into the cupola with the iron for pots for annealing purposes, is now very extensively used in making malleable iron. When the malleable scrap is very rusty it should be fed into the pot mixture, as it might cause trouble by forming pinholes in the surface of malleable castings.

Steel scrap is composed of plate shearings, old files, shafts—in fact any kind of steel scrap in pieces weighing not over 250 pounds. It is generally added to the mixture, but in some cases the market value of such scrap is so high that

it can be sold and other materials purchased at prices that will enable malleable iron to be produced more cheaply.

21. Ferrosilicon is a combination of iron and silicon, with small percentages of other impurities. It is sometimes looked upon as an iron running extremely high in silicon. A car load of this useful material, which may contain from 8 to 14 per cent. of silicon, should always be kept on hand. It often happens that the furnace works badly, and the heat must remain in the furnace longer than it ordinarily should. The long-continued heat burns out much of the silicon and causes the absorption of gases to such an extent that the iron is ruined for all casting purposes. The addition of from 150 to 500 pounds of ferrosilicon, well stirred, or rabbled in, will, however, save the heat, although the castings made are not so strong. The heat may also be run into pigs, and used subsequently with the sprues.

IRON MIXTURES.

22. Classification of Malleable Mixtures.—The mixtures used in malleable-iron casting depend on the melting process. There are three of these processes in use in American practice: the *cupola*, the *coal*, or *air*, *furnace*, sometimes called the *straight-draft furnace*, and the *open hearth*. A fourth process, known as the *crucible process*, is no longer used in America, being very expensive, although in Europe a large part of the malleable castings are still made by it.

23. Cupola Mixture.—The mixture for the **cupola process** is probably the easiest to keep in good condition, as the amount of silicon burned out is quite constant, and amounts to about .25 per cent. If it is desired to hold .6 per cent. of silicon in the castings, and this is usually the case in work to which the cupola process is adapted, the mixture that enters the cupola must contain about .85 per cent. of silicon.

24. Coal-Furnace, or Air-Furnace, Mixture.—With this process there is also very little trouble in connection

with the mixture, unless the blast gives out or the fires are not properly attended to. As this is seldom the case, care must be taken to provide only as much silicon as is required in the casting and the amount burned out; the latter usually amounts to about .35 per cent., but depends in part on the manner in which the furnace is run. In order to get castings with .5 per cent. of silicon the mixture must contain .85 per cent. of silicon when it enters the furnace.

25. Open-Hearth Mixture.—The mixture for the open-hearth furnace requires the closest attention. The product of this type of furnace is superior to that of other types, but the process is more liable to irregularities. The amount of silicon burned out is from .3 to .4 per cent. when normal, and may occasionally run up to .75 per cent. It is therefore well to have a supply of ferrosilicon in a box close to the furnace to add to the bath, if necessary, but it should be used only when absolutely necessary. There is at times a temptation for the melter to let the heat drag along without exerting himself to keep it rabbled up, and then cover up this lack of attention on his part by the addition of ferrosilicon.

26. Calculation of the Malleable Mixtures.—The first step in calculating the proportions of the mixture is to proportion the pig iron to the scrap. In normal malleable practice equal quantities of these are used; where much heavy work is made more pig iron is used; and for very light work more sprues are required. It is not good policy to have more than 70 per cent. of pig iron in the mixture, as otherwise the castings will be weak; if more than 70 per cent. of sprues are used, there will be trouble from excessive contraction, cracking, and incomplete annealing.

Suppose 50 per cent. of scrap is to be used; this may be made up of 45 per cent. of hard sprues and 5 per cent. of malleable scrap, or where the open-hearth process is used 25 per cent. of hard sprues and 25 per cent. of malleable scrap may be used, the remainder of the mixture, 50 per cent., being pig iron. For purposes of calculation, malleable scrap may be assumed to contain .4 per cent. of silicon. The

percentage of silicon in the sprues is known from day to day through the laboratory; let us suppose for illustration, that it is .5 per cent. Next the greater part of the pig iron is selected from the stock of which the largest quantity is on hand, say iron with 1 per cent. of silicon. The remainder of the mixture is made up of a pig iron that will supply the remainder of the silicon required. The amount of the latter may have to be determined by trial, especially if the iron that would just give the required composition is not at hand.

The calculation for a charge of 20,000 pounds for a 10-ton heat in the coal furnace is made as follows: Assuming that 9,000 pounds of sprues and 1,000 pounds of malleable scrap are used, we have

	Pounds.	Per Cent. of Silicon.	Total Silicon. Pounds.
Sprues.....	9,000	.5	45
Malleable scrap....	1,000	.4	4

If there should be on hand a good stock of Mabel iron, running 1 per cent., and Briar Hill running 1.25 per cent. of silicon, these may be taken in the following proportions:

	Pounds.	Per Cent. of Silicon.	Total Silicon. Pounds.
Mabel.....	5,000	1.00	50.0
Briar Hill.....	3,000	1.25	37.5

There are still 2,000 pounds to be provided. To find out what can be used it is necessary to see how many pounds of silicon are needed to give .85 per cent in the final mixture. This, for 20,000 pounds, would be 170 pounds. Adding the amount of silicon already provided, we have 136.5 pounds, leaving 33.5 pounds to be furnished by 2,000 pounds of pig iron, which must therefore have a percentage of about 1.7 silicon. As there is no pig iron with

this high percentage of silicon in stock, it is necessary to reduce the Mabel and increase the Briar Hill. The object is to leave just enough silicon to be provided for by something that is in stock. By trying a few times, it is found that 3,000 pounds of Mabel and 6,000 pounds of Briar Hill will give proportions of silicon that can be used, as indicated by the following calculation:

	Pounds.	Per Cent. of Silicon.	Total Silicon. Pounds.
Mabel.....	3,000	1.00	30
Briar Hill.....	6,000	1.25	75

When added to the original 49 pounds from the scrap, this will give 154 pounds of silicon out of the 170 required. This leaves 16 pounds of silicon and 1,000 pounds of iron yet to be provided. Seneca iron with 1.5 per cent. of silicon will supply approximately these amounts. Using the Seneca iron, the mixture would now be as follows, which gives .845 per cent. of silicon:

	Pounds.	Per Cent. of Silicon.	Total Silicon. Pounds.
Sprues.....	9,000	.50	45
Malleable scrap....	1,000	.40	4
Mabel.....	3,000	1.00	30
Briar Hill.....	6,000	1.25	75
Seneca.....	1,000	1.50	15
Total.....	20,000		169

The open-hearth mixture is calculated in exactly the same way. In both cases 100 pounds steel can be thrown in without upsetting the calculations. In the cupola mixture the method outlined above is also employed. Here, however, it is necessary to deal with small charges of, say, 2,000 pounds each, these being charged into the cupola with layers of

coke between them. The charging is done as in the gray-iron foundry, with the exception that in malleable practice the amount of coke charged should be double that used for gray iron, or 4 pounds of iron to 1 pound of coke, instead of 8 pounds of iron to 1 pound of coke. This is necessary to insure iron hot enough to run the light castings to which this process is alone adapted.

27. Pot Mixture.—One of the large items of expense in a malleable foundry is met with in the maintenance of the annealing pots. The pots last from four to twenty heats, depending on their composition. As they are wasted away during the process of annealing, they are practically a dead loss, and as the average pot weighs 300 pounds this forms quite an important item.

As it is essential to have an iron with a high melting point and at the same time as refractory as possible, it must be pure and free from graphitic carbon. It is therefore advisable to use the regular malleable metal whenever there is too much made, and more than enough sprues for the regular mixture are produced in the regular day's run. As, however, this would not give enough pots to last the annealing room 1 day in the week, it is necessary either to increase the charge of the furnace and use the regular malleable mixture, or to run a cupola especially for this purpose. The pot mixture when melted in a cupola is made up of the pig irons used for malleable castings, and as much malleable scrap as it will carry, as high as 75 per cent., if necessary. The silicon should be .6 per cent., and such a mixture would consist of, say:

	Pounds.	Per Cent. of Silicon.	Total Silicon. Pounds.
Malleable scrap	3,000	.40	12.0
Mabel	1,000	.75	7.5
Briar Hill	2,000	1.00	20.0
Total	6,000		39.5

The average amount of silicon in this mixture is .66 per cent.

It is not advisable to remelt the old pots, as they are too heavily oxidized. Pieces of iron too large to be charged in a furnace, commonly called *salamanders*, when broken up small enough to go into the charging door of the cupola should, however, be utilized.

28. Pill-Heat Mixture.—Another mixture used in the malleable-iron industry, when the open-hearth process is employed, is called a **pill heat.** It is used when it is necessary to cut down the bottom of the furnace or hearth. About 3,000 pounds of pig iron containing about 1.5 to 2 per cent. of silicon is melted and rabbled about the bottom, washing the whole space. This iron gradually oxidizes, unites with the slag, sand, and burned iron in the bottom, loosens it, and forms a copious slag. When the whole is tapped out, very little iron is left, and that is of such a poor quality that it should only be fed cautiously, a little at a time, into the pot mixture. It is a good plan also to add a little fluorspar to this mixture to thin it down while in the furnace.

MALLEABLE-IRON PRODUCTION.

MELTING PROCESSES AND EQUIPMENT.

29. Classification of Melting Processes. — In American practice the iron for malleable castings is melted almost entirely in the cupola, the coal, or air, furnace, or the open-hearth furnace. As the melting process in each of these is somewhat different, this subject is divided under these three headings, and the process for each explained.

30. The Cupola Process.—Malleable iron melted in a cupola has the disadvantage of an extremely close structure in the hard casting; this causes trouble in annealing. In fact, an annealing oven charged with cupola iron always

requires a temperature of from 200° to 300° F. above that necessary to anneal furnace iron in order to effect the change of carbon. The castings are, moreover, not as strong as those made of furnace iron, and hence cupola iron is used only for the lightest work where the shape is more important than the strength. The cost is, however, about ½ cent less per pound than the same castings made of furnace iron, and for this reason saddlery, hardware, pipe fittings, bicycle parts, wagon castings, etc. are all made of cupola iron. Where strength is essential, as in the case of car couplers, motor gears, etc., and steel castings are too expensive, furnace malleable is always used.

The process of melting a malleable mixture in a cupola is the same as that for melting gray iron, which is fully described in *Cupola Practice*. As has already been stated, the only difference between the mixture used in cupola practice in gray iron and malleable lies in the amount of coke used. In the best average practice in malleable-iron work 4 pounds of iron is charged to 1 pound of coke. A larger proportion of coke is used than in gray iron in order to insure a sufficiently high temperature to make the iron run freely. The iron should be so hot when poured that it squirts out of the vents in the molds.

In making the mixture and preparing the charge for the cupola, it is important that the pig iron be broken up into small pieces; as in melting, the thin sprues melt first and go to the bottom, while the more slowly melting pig iron comes down afterwards. If the cupola is tapped out into hand ladles instead of a bull ladle, and this is usually the case, in order that the iron may be kept as hot as possible, there is every likelihood of the low-silicon metal getting into the molds that are poured first, and the high-silicon iron into the last. Both sets of castings are therefore liable to be bad, not only in their composition, which causes trouble in the annealing process, but the castings made first are made entirely of scrap and the last entirely of pig iron. The scrap castings are liable to crack and warp, and the pig-iron castings are spongy and weak.

31. Coal-Furnace, or Air-Furnace, Process.—The **coal-furnace, or air-furnace, process** makes better malleable castings than the cupola process. It takes longer to prepare the heat, but allows it to be poured more quickly, thus giving the molders more time for actual molding. It was formerly the aim of every malleable-foundry owner to put in coal furnaces, just as at the present time it is the aim to use the open-hearth furnace. The disadvantage of all hearth or furnace processes as against the cupola lies in the greater lack of flexibility, a furnace not being economical when not fully charged. The expense of running the cupola is less, but this is offset by the better grade of castings produced by the furnace processes. A breakdown of the cupola, also, is more serious, and the delay longer. The first cost of the coal furnace is, however, greater than the cupola, and the open-hearth furnace is still more expensive.

The coal-furnace process is carried out in several ways. In the simplest of these the ordinary reverberatory furnace, which is illustrated in Fig. 1, is used. Although it has been almost entirely superseded by other forms, it is the least

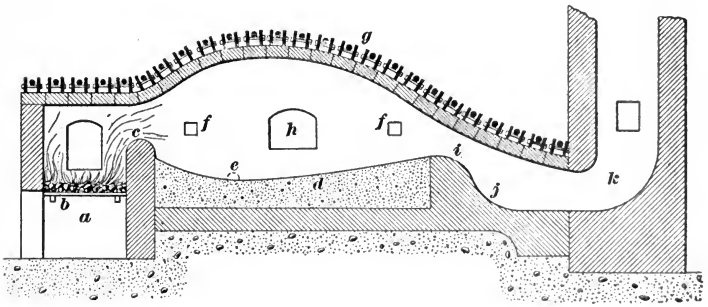

FIG. 1

complicated form of furnace and is still used in some malleable foundries. As the air is supplied by natural draft, the melting is necessarily slow. The iron is, however, for this reason not subjected to the serious oxidation of a blast, and better castings are therefore produced. Excessive oxidation causes pinholes in the surface of the castings, and

these are avoided by this process. The better grade of fittings, skates, pistols, and all articles requiring subsequent polishing seem to give least trouble when melted in this slow, although expensive, way.

32. Construction of Coal, or Air, Furnace.—In the furnace shown in Fig. 1, *a* is the ash-pit, at the front of which are located the ash-pit doors used for cleaning the fires. The door opening should extend far enough above the grate-bar rests to permit the grate bars to be drawn out when the fire is dumped. The grate is shown at *b*, with the firing door just above; *c* is the bridge wall over which the flames travel, striking the roof, and reflecting heat downwards on the charge, which is piled on the sand bottom *d*. When melted, the charge is tapped out at *e*; *f*, *f* are poke holes through which the charge is rabbled and, if desired, poled with green hickory poles; *h* is the skimming and charging door, the bottom of which is on a level

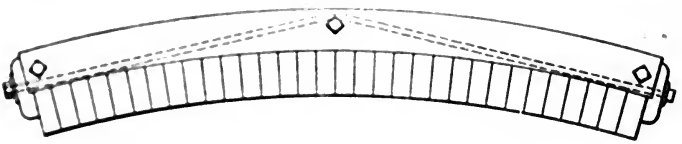

FIG. 2

with the top of the bath of melted iron. The roof *g* consists of a series of brick arches, about 9 inches thick and about 13 inches wide, constructed as shown in Fig. 2. These arches, commonly called **bungs**, can be repaired easily when burned out or broken, and when lifted off leave the whole furnace bottom exposed for remaking or repairs. The sides of the furnace are usually formed of cast-iron plates, to which are attached the charging and skimming doors and the firing apron; the plates are properly held together with buckstaves and tie-rods, and are lined with firebrick, which must be of the first quality.

33. There should be no sharp corners in the furnace interior, as the brick at the corners would soon burn off.

Expensive repairs at the base of the stack, for instance, can easily be avoided by rounding the corners of the flue, as shown at *i*, *j*, and *k*, Fig. 1, instead of making them sharp, as shown by the full lines in Fig. 3. The dotted lines in Fig. 3 show how, when the corners are left square, the flames cut out the brick after a few weeks' run.

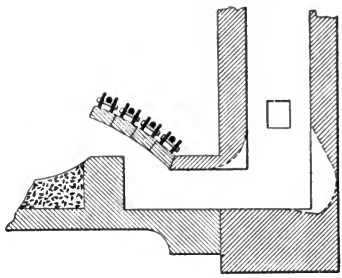

FIG. 3

34. The other, and more generally used, forms of the reverberatory, or coal, or straight-draft, furnace, as it is sometimes called, differ from the simple form just illustrated only in the addition of an air blast to hasten the melting process. Two modifications of this more modern type are in use. In the first the blast is introduced into the ash-pit, as shown at *a*,

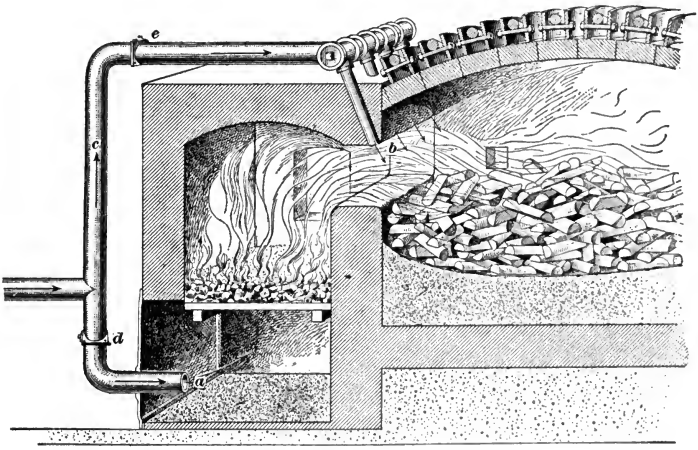

FIG. 4

Fig. 4; while in the second modification, an additional air blast is introduced over the bridge wall, as shown at *b*, the

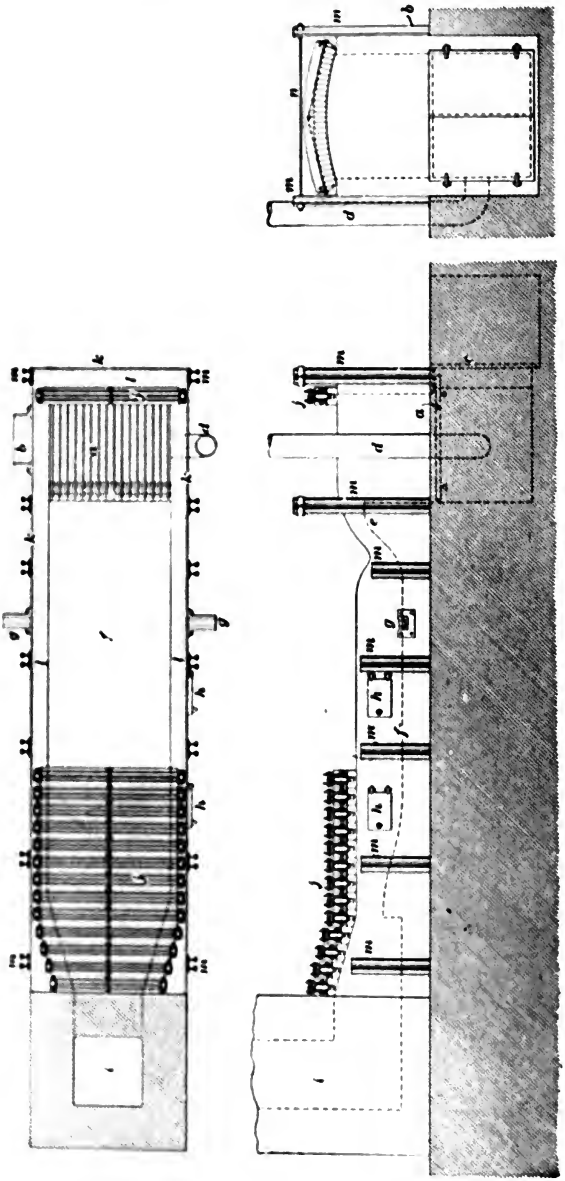

FIG. 5

object of the second blast being to force the flame down upon the iron and complete the combustion. The fire obtained by means of this arrangement is very hot, and the time required to do the melting is very much shortened thereby, it being possible by this method to melt a charge of about 7 tons in about 4 hours, while with the natural-draft system it might take nearer 7. It is at the present time used more extensively than any other method, although the very high temperature of the flame is rather hard on the iron.

In Fig. 4 the bungs do not extend over the grate, this part being arched over with brickwork. Practice differs somewhat in this respect, some malleable-iron founders preferring this construction, while others prefer to have the bungs extend clear to the front of the furnace, as shown in Fig. 1. The blast pipe *c*, Fig. 4, is usually made of galvanized iron, the bends being made of a radius equal to the diameter of the pipe. The blast gates *d* and *e* are simply dampers inserted in the pipe. The blast should be brought in at the side of the furnace in order to allow the ash-pit doors to be placed at the front. This will enable the fires to be drawn more easily. In Fig. 4, the blast pipe is shown at *a* instead of on the side of the furnace in order to simplify the illustration.

35. Fig. 5 shows the type of furnace ordinarily used in a malleable-iron foundry; *a* is the grate, *b* the fire-door and apron, *c* the ash-pit doors, *d* the blast pipe, *e* the bridge wall, *f* the hearth, *g*, *g* the tapping spouts, *h*, *h* the charging doors, *i* the chimney flue, *j*, *j* the bungs, *k* the cast-iron plates forming the outside of the furnace, *l* the brick lining, *m* the buckstaves, and *n* the tie-rods. When more than one heat is taken from a furnace in a day, one bung at the middle may be made of double width to facilitate the charging when the furnace is hot.

36. The most important part of a furnace is the bottom, or the sand hearth *d*, Fig. 1. Owing to the higher temperature to which it is subjected, the bottom of the open-hearth

furnace requires much more attention than that of the coal furnace. If the bottom is put in rightly when the furnace is first built, it is generally necessary to repair it only after every second or third heat. The material used for the bottom is fire-sand, which is a very sharp sand containing nearly 100 per cent. of pure silica, although it may contain up to 1 per cent. of lime, iron, and clay. It is often a ground sandstone. When the intense heat has played on the bottom for a short time, a crust forms on the surface; this prevents the sand from rising up and floating on the bath of melted iron. If the sand were permitted to float, the iron would speedily cut its way through the bottom into the furnace pit. When this begins, and in fact in all other emergencies, the best available method must be used to stop the flow of iron. Each case requires individual treatment, and no method that will be applicable generally can be described. The necessity of each case, however, requires means to stop the flow as quickly as possible, either by the application of molding sand or even a stream of water, if it can be applied without disastrous consequences.

37. While the bottom of a furnace is the most important part, the roof, usually called the **crown**, must also be looked after carefully. A small pneumatic crane installed next to the furnace, to lift the bungs or individual sections of the crown, swing them over the furnace, and run them out into position, will be found of very great service. Another arrangement for handling the bungs is to support, lengthwise over the furnace, an **I** beam equipped with a hand-operated chain hoist that travels upon it; this is the older method, and it is gradually being displaced by more modern and more rapid methods. The bungs when placed into position are carefully mudded up so that no heat may escape or cold air be drawn in. This is done with fireclay mixed with sand, wetted down, and worked into a plastic mass.

38. The preparation of the filling in which the tap hole is formed, commonly called the **breast**, requires great care; for if it should give away while tapping the whole heat would

run on the floor, and if the roof of the building should be made of wood, it would probably burn down the whole foundry. The best material for making the breast is fire-sand that has been mixed with a little fireclay to bind it, and enough coke dust to allow it to be easily broken out. A common bod stick, similar to that used with a cupola, is used to close the tap hole. Graphite sleeves and stoppers for the tap hole, shown in Fig. 6, are now on the market,

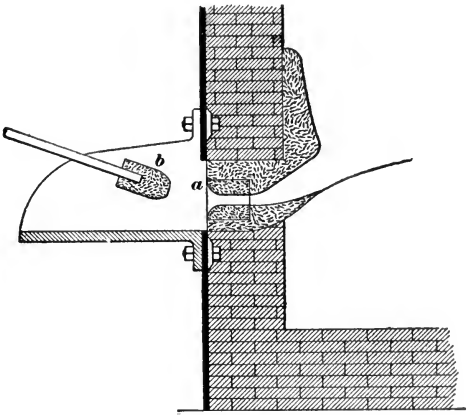

FIG. 6

the sleeve *a* being built into the breast, and the stopper *b* mounted on a rod, as shown. The stopper is held against the spout while the stream is running and serves to check and, if necessary, to stop the flow. Where more than one heat is taken in a day, the breast is made substantial enough to last for the day's work. Great care must be taken in tapping after the first time, as iron that has become chilled may have lodged on the inside, and some heavy driving may be required to loosen it and crowd it inwards. This often so injures the breast that the heat runs out and is lost. The making of an extra breast is an expensive operation and requires considerable time; it is therefore naturally avoided whenever possible.

When the sleeve and stopper are not used in preparing the breast and running out the heat, the tapping hole is prepared exactly as in cupola practice. Several bod sticks are

FIG. 7.

kept on hand; these are usually made of iron of the type shown in Fig. 7.

39. The **spout** of a malleable furnace is longer than that used on a cupola; it is placed about 2 feet 6 inches above the floor level. Large furnaces may have two spouts, one on each side, the bottom being shaped as shown in Fig. 8. This is done to get out a large heat in as short a time as possible. The construction of the coal furnace and its usual position in the foundry allow a spout to be provided at each side.

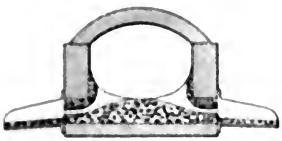

FIG. 8.

40. Charging the Coal Furnace.—In charging upon a cold bottom, the bungs of the furnace are usually taken off in order to repair the bottom if necessary, and make room for charging. If the bottom is newly made, old boards are laid on the sand to prevent the iron from making holes before the surface of the sand has hardened. The scrap or sprues from former heats, including scrap castings, is put in first. This is either shoveled in from a pile on the floor or brought from the scouring room in boxes, which are taken up by two or four men and emptied into the furnace. The scrap is then leveled and pig iron thrown in. It is a good practice to arrange the pig iron in regular piles perpendicular to the longitudinal axis of the furnace, piling it up like cord wood, beginning at the bridge wall and ending at the throat or entrance to the stack. The object of this piling is to facilitate the melting operations. The first to melt is the scrap, because it is comparatively thin and has a low melting point,

being white iron. In the meantime the stack of pig iron, which is directly in the current of the flame, is getting ready to melt down. The melter must then take his bar and throw down the end pigs into the melted bath, where they are soon assimilated. With a nice orderly pile this is comparatively easy, but with a pile of pigs thrown every way, it is very hard, and one must wait until the whole sinks down into a semifluid mass, which with much rabbling will gradually yield and mix into a homogeneous body of melted iron, but a valuable half hour will have been lost.

If more than one heat is taken in a continuous run, the charging is usually done by removing the charging bung, and charging the sprue and pig iron through the opening thus made. A portion of the iron may also in this case be charged through the skimming door, using for this purpose a short peel, which is described later on.

It takes from $\frac{3}{4}$ hour to $1\frac{1}{4}$ hours to charge a 10-ton heat. When steel is added to the mixture, it should be introduced after the metal has just melted and is covered with slag. Malleable scrap should be charged on top of the hard scrap and just under the pig iron. The limited gray-iron scrap accumulated by the malleable foundry can also be fed in a little at a time without injury to the resulting metal.

41. Melting and Refining.—When the temperature of the bath becomes high enough to cause oxidation in the bath itself, a refining process takes place. Considerable oxidation has probably been going on during the melting down of the pile of pig iron, as the scintillation noticeable as the flame sweeps over the pile indicates a combination of iron with oxygen. This results in a loss of silicon before the bath is uniformly fluid. As the bath is heated up, it becomes more fluid and the slag begins to separate and float on top, forming an effective protection for the iron while the heating is continued. When the bath is hot enough to show distinct signs of boiling, a reaction is going on within, the oxygen present uniting with the silicon and manganese and entering the slag as oxides of silicon or manganese. It is

now time to hasten this reaction and utilize the affinity of silicon for oxygen to partially burn out the silicon. This gives an interior heat that raises the temperature of the metal quicker than any firing will do. The bath is therefore skimmed, by means of a special skimming tool, shown in Fig. 9 (*a*), which is well daubed with clay wash and dried.

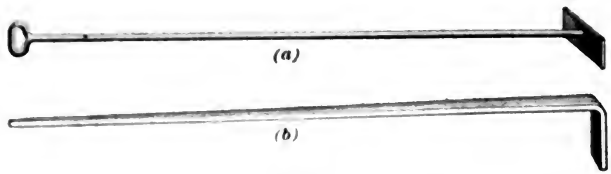

FIG. 9

Another form of skimming tool, shown in Fig. 9 (*b*), may be made from a piece of $\frac{5}{8}'' \times 3''$ flat iron, drawn down to $1\frac{1}{4}$ inches on one end, and bent over at the flat end, as shown. This tool is easily made and lasts longer than the form shown in Fig. 9 (*a*).

The slag is skimmed off the bath and drawn out of a door in the side of the furnace provided for that purpose, after which it is wet down with water and removed. The bath is now clean and greedily absorbs the oxygen from the carbonic oxide and the free oxygen carried with the burning gases from the fuel. The combination of oxygen with the contents of the bath generates heat and the iron rapidly becomes highly overheated. It is now necessary to skim again, as the burning out of silicon makes slag, as does also the oxide of iron that is formed continually and combines with the sand of the bottom and sides. A test plug should also be taken at this stage. Any iron in the slag may be saved by rolling the latter in a cinder mill and washing it, which leaves the iron that has been skimmed off in the form of small shot free in the mill, the slag having been carried off.

12. A **test plug** is a test bar of iron about $1\frac{1}{4}$ inches in diameter and about 8 inches long, made in a mold formed by forcing a tapered piece of wood of about this size into a

box full of molding sand. A furnace dipping ladle shown in Fig. 10, which has previously been well daubed with clay wash and dried, is now taken and melted iron dipped from as low a point in the bath as the melter can reach by pushing the ladle downwards. This is poured into the hole

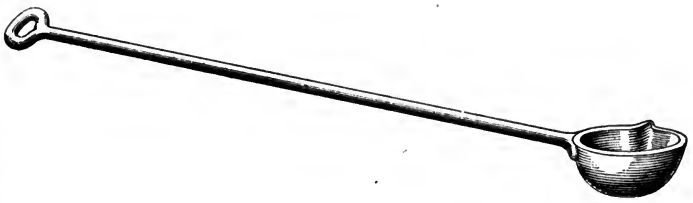

Fig. 10

made in the molding sand and allowed to set. As soon as the iron will hold together it is drawn out with a pair of special tongs and cooled very slowly by dipping into a water tank, commonly called the *water bosh*, which is always kept near the furnace for the purpose of cooling the long and heavy poking bars.

In order to prevent too rapid cooling, it is advisable to plunge the bar into the water and withdraw it quickly, allow it to turn red, then dip it again, and repeat this operation until it is cool; this should occupy about 7 or 8 minutes. If it is cooled too rapidly, one is liable to be deceived regarding the condition of the iron in the furnace. Sudden cooling chills the iron and causes the fracture to appear white even when the iron is not of the right composition.

When the test bar has been cooled it is broken by striking it sharply against some iron corner and the fracture carefully observed. If it shows good radial crystals with little or no mottling in the center, the heat is ready to tap. If the plug is heavily mottled or even gray, the bath is either too cold or has too much silicon in it. It is then necessary to hold the heat anywhere from 10 minutes to 1 hour longer, the less the better for the iron. Tests are made from time to time until the desired fracture is obtained, after which the tapping is proceeded with at once.

If, on the other hand, the plug is perfectly white no time should be lost in tapping. If the heat has gone too far, the plug will show little pinholes along the edge or skin. If this is the case, it is advisable to add some ferrosilicon, say about 150 pounds or more, depending on the circumstances, broken up into small lumps. This should be stirred or rabbled in well, the heat held about 5 minutes, and then tapped.

43. Rabbling the Charge.—During the heat a good melter will rabble the iron at as frequent intervals as possible. The frequency with which this may be done is determined by the endurance of the melter, the work being exceedingly trying. By stirring frequently the bath is kept uniformly mixed and the chemical reaction promoted. The rabbling bars are often made of 1½-inch round wrought iron,

FIG. 11

about 15 feet long, and of the form shown in Fig. 11. Pieces are welded on as the end wears away. Bars of the above diameter are, however, rather heavy, and in some foundries a 1¼-inch bar, with the end bent over about 8 inches, is preferred. Steel bars are also used quite extensively in some foundries, as they are much cheaper than wrought iron, although they melt off more rapidly.

44. Firing the Coal Furnace.—It is very important that a continuous intense flame be maintained upon the charge of iron in the furnace. It is usually found economical, and the best results are obtained by wetting down the coal, which is then shoveled upon the firing apron. The bed of coal upon the grate bars should be leveled off, the coal pushed to the farther end of the firebox, and stirred or raked continuously by means of a small firing hook, which is similar in form to the slice bar used in firing a boiler. Continuous firing is necessary.

The apron on which the coal is shoveled consists of a cast-iron plate or trough bolted to the side of the furnace, and arranged to slope downwards toward the grate at an angle of about 30°.

A good grade of soft coal should be used, preferably rich in gas-making qualities and free from sulphur. With good firing and a well-proportioned blast, it should not require more than 50 pounds of coal for each 100 pounds of iron melted.

When more than one heat is taken from the furnace before cooling down and repairing the bottom, the fires must be cleaned between the heats, dumping all the ash and cinder into the ash-pit, and kindling a new fire upon the grate. If this is not done, the air spaces between the grate bars become so choked that it is impossible to obtain proper combustion, which results in a cold heat and bad iron.

MALLEABLE CASTING.

(PART 2.)

MALLEABLE-IRON PRODUCTION.

(Continued.)

OPEN-HEARTH MELTING PROCESS.

1. General Construction and Operation of Open-Hearth Furnace. — The **open-hearth process,** also called the **Siemens-Martin Process,** takes its name from the style of furnace used, which is known as the open-hearth, or regenerative, furnace, and in modern practice invariably uses gas or oil as a fuel. This style of furnace is called regenerative, because a portion of the heat of the waste gases is returned to the furnace with the incoming air and gas. In this style of furnace the ingoing air and gas, when gas is used, is heated by the hot gases as they leave the furnace. This is accomplished by the arrangement illustrated in Fig. 1, which shows a section through an open-hearth furnace constructed for the use of gas. In this illustration *a* is the hearth; *b* the crown or roof; *c*, *c*, *c* the charging doors; *d*, *d'* air ports; *e*, *e'* gas ports; *f*, *f'* and *g*, *g'* chambers, commonly called *regenerative chambers*, filled with **checkerwork,** which consists of special checker brick, about $2\frac{1}{2}$ in. $\times$ $2\frac{1}{2}$ in. $\times$ 9 in. in size, laid up loosely in alternate layers about $1\frac{1}{2}$ inches apart; *h*, *h'* are air inlet flues; and *i*, *i'* gas inlet flues. The flues *h*, *h'*

For notice of copyright, see page immediately following the title page.

53B—12

and i, i' are connected with pipes and valves that are so arranged that the incoming air and gas may be made to enter either side of the furnace at the will of the operator, while the burned gases go out at the other side. When the air and gas enter at d and e, the burned gases go out at d' and e', and in circulating through the checkerwork in the chambers f' and g' heat the brick to a high temperature. If the direction of the gases through the furnace is reversed,

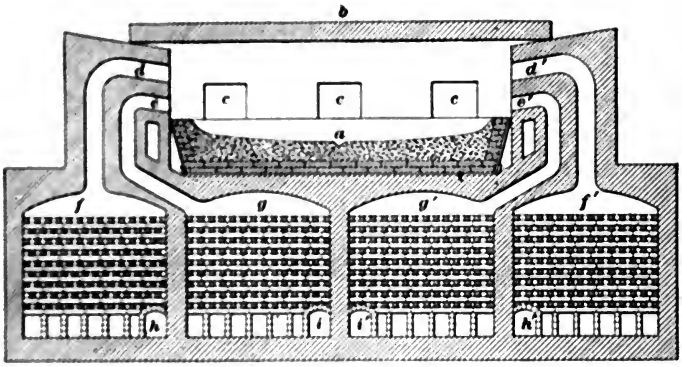

FIG. 1.

the cold air and gas will pass in through the chambers f' and g' and will take up the heat previously given to the brick, thus entering the furnace at a high temperature; the burned gases now pass out through the chambers f and g and heat the checkerwork in them. By reversing the direction of the gases at suitable periods, they will always enter the furnace in a highly heated condition, thus creating a flame of a very high temperature and saving a large amount of heat that would otherwise have passed up the chimney and been lost.

2. The arrangement of the gas and air piping outside of the furnace is shown in Fig. 2. The ends h, h' and i, i' connect with the flues marked with these letters in Fig. 1. At j and j' are two valves, by means of which the ingoing gases may be made to enter either side of the furnace, and

the burned gases made to go out at the other side, through the valves and the flue k to the chimney l; a plate damper is

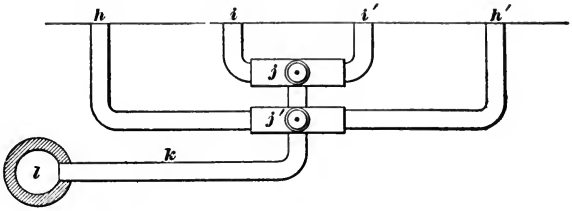

FIG. 2.

placed in the chimney flue k to regulate the draft. The valves j, j', commonly called *Siemens valves*, are constructed as shown in Fig. 3, in which m is a disk valve, which is situated in a suitable chamber above the casting q, through which the air or gas enters; n is a butterfly valve; o, o' are openings that connect with the pipes leading to the furnace; p an opening that connects with the flue leading to the chimney; and q a casing enclosing the valve n.

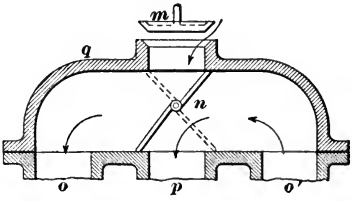

FIG. 3.

Suppose that the valve shown is connected at j', Fig. 2, so that the opening o connects with h, and o' with h'. When the valve n is in the position shown, the air enters the valve m, passes through the opening o, through the flue h, Fig. 2, the chamber f, and flue d, Fig. 1, to the furnace. The gas enters through a similar valve, passes through the flue i, the chamber g, and flue e to the furnace. The hot air and hot gas meet and combustion takes place as they emerge from flues d and e. The burned gases divide as they leave the furnace and pass out through the flues d' and e'. The part that goes out through d' passes through the chamber f', the flue h', into the valve j'' at o', Fig. 3, and out through the opening p to the chimney, and the part that goes out through e' takes a similar course through the valve j,

into the chimney. It will be seen that when the butterfly valves *n*, Fig. 3, are turned to the position shown by the dotted lines, the air and gas pass through the valves *m*, through the openings *o'* into the furnace, and the burned gases enter the valves at *o* and pass out of the openings *p* to the chimney. The direction of the air through the furnace is thus reversed.

3. The burning gases give up most of their heat in the melting chamber. They are, however, still very hot, about 2,000° F., as they pass into the regenerative chambers. The cold brick checkerwork absorbs a large part of this heat, leaving the temperature about 800° F. when the gases leave the chambers. The brick gradually becomes hotter and the gases going up the stack also become hotter, as they cannot give up as much heat to the hot as to the cold brick. Hence, in about 20 minutes, it is no longer economical to let the gases flow in the same direction and the butterflies of the Siemens valves are reversed. The cold gas and air have been given some 1,200° F. before they reached the furnace, consequently the temperature created by the combustion is exceedingly high. While the cold air and gas are being heated on the right-hand checkers, they are cooling the brick in them, so that in about 20 minutes the direction of the gases should be reversed, or the one checker-chamber will become too cold and the other too hot.

By this process a large part of the heat value of the gas fuel is utilized, and a 10-ton heat can be melted and ready to take out in 2½ hours after charging. Cases have been known in which it took only 1 hour and 50 minutes, and with a well-constructed furnace, the ports new, the checkerwork clean, and the furnace in charge of a good melter, there is no reason why this should not be done without damaging the furnace.

This process has now been adopted in many of our most progressive malleable-iron works. Its full economy, however, will not be obtained until melting is done day and night, for the furnace must be kept hot all the time and the

cost of heating it at night brings no direct return. It can be used to the best advantage only where malleable castings are produced on a large scale and modern appliances are used in handling the metal.

In one malleable-iron foundry in operation at the present time there are several 18-ton furnaces giving good results. The metal is tapped into 6-ton ladles, and carried off with a 15-ton electric traveling crane. Three furnaces in operation at one time are able to furnish 100 tons of malleable castings for a day's run of three heats each.

Three forms, or adaptations, of the open-hearth furnace are in use. The simplest form, which has already been described and illustrated, is usually built of 10-ton or 12-ton capacity; the iron is tapped from this furnace into hand ladles in the usual way. Next comes a larger furnace of 15-ton or 20-ton capacity, built for melting steel if desired, which has three spouts for tapping into ladles handled by the traveling crane; this is probably the most successful, under suitable conditions, of the furnaces in use. Finally comes the tilting furnace, which has been used in steel manufacture and is at present being introduced in malleable-iron works. It is predicted by some engineers that it will prove successful, but up to the time of writing it has not been fully tried. The first cost of this furnace is about twice as great, and the cost of maintenance about four times as great as that of the ordinary type of open-hearth furnace.

4. The design of the air and gas passages, together with the ports, must be such that the crown of the furnace is as much protected from the cutting effect of the intensely hot flame as possible. While it is essential that the brick should be almost at the point of melting, this extreme temperature should not extend inwards over an inch at most. The best practice, therefore, allows the body of the furnace to become dangerously hot for a short time only; the heat is checked before any actual damage is done. The brick that stands high temperatures best is made of silica, and in all open-hearth furnaces built for malleable-iron work the

material above hearth level, in fact above the checker brick, should be of the best grade of silica brick. As this brick expands when heated, due allowance must be made for it in the arrangement of the buckstaves, or structural-iron supports, now customary.

In order to prevent injury to a new furnace, the melter must heat it very slowly, so as to thoroughly dry it out. He should first use wood fires or a small jet of natural gas, if it is available; in a week's time the heat can be increased and in 2 weeks' time the gas turned on, first very gently and then more and more until full heat is reached. In the meantime the melter should watch closely the structural ironwork and loosen or tighten tie-rods here and there as necessary. When ordinary firebrick is used, it is necessary to tighten the tie-rods, as it contracts when it is heated; the arches are thus prevented from cracking and the brickwork comes up to the required temperature with the least amount of damage.

5. Making the Bottom.—The hearth, as it is left by the furnace builder, consists of a steel pan with sloping sides, carefully riveted together, perforated for the spout, and

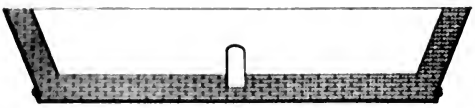

FIG. 4.

lined with silica brick, as shown in section in Fig. 4. When the furnace is heated to the proper point, the operation of making the bottom can be commenced. The melter throws about 2 inches of fire-sand and clean cupola slag, mixed in the proportion of about 20 parts of sand to 1 of slag, all over the bottom. The slag helps to cement the particles of sand together. He then increases the heat for a few hours and thoroughly bakes and consolidates the sand. He repeats this operation several times until he has a good base to work

upon, when he finishes the bottom, using the fire-sand without the slag. The spoon shown in Fig. 5, the end *a* of which consists of a shallow-dished plate, is now taken and the convex side used to smooth off the sand thrown on the bottom

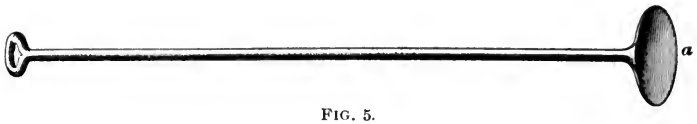

FIG. 5.

and against the sides while being burned on. When there are small patches to be put on, the sand is introduced with this spoon. Larger quantities are put on with a shovel; to do this properly, however, requires considerable skill in the use of the shovel. The work must be done very quickly, as the cold air that enters the furnace when the door is open chills it. In order to do this work in the shortest possible time, therefore, the helper throws the sand on the spoon as the melter draws it back, and in order to prevent any more chilling than is necessary, the door is raised only far enough to do the work properly. When it is necessary simply to throw in the sand, the melter does it himself, the helper raising and lowering the door quickly at the required time.

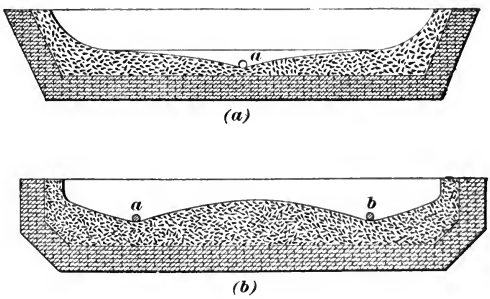

FIG. 6.

By building up the bottom to the proper level a few inches at a time the formation of heat cracks is avoided. This is a very important matter. The old coal furnace, or air furnace,

method, in which the bottom was made all at once, was adopted at first in open-hearth practice, but with very unsatisfactory results, as the rapid drying frequently caused it to crack to such an extent that the iron worked under sections of the bottom, thus loosening them and causing them to float. This permitted the molten iron to run out, fill up the checker-work, and spoil the furnace.

Fig. 6 (*a*) shows the bottom of the open-hearth furnace, with the tap hole being shown at *a*, as it should appear when completed. Where two spouts are provided for simultaneous tapping, it is necessary to slope the bottom as shown in Fig. 6 (*b*), the tap holes being shown at *a* and *b*.

6. Cleaning and Repairing the Bottom.—When the heat has been tapped and the slag run out, it is necessary to clean the bottom for the succeeding heat. The melter does this as best he can after the first or second heat, as in open-hearth practice the breast is not broken out until the close of the day's work, but after the last heat for the day has been taken and the breast is broken out, the hole is large enough for the melter to work through it with his scraping bars. He pushes the slag and dirt toward the tapping hole by introducing tools through the charging doors, and by working carefully through these openings is able to leave the bottom fairly clean. As, however, the bottom is liable to contain hollows in which small bodies of melted iron remain, which immediately begin to oxidize and burn up and thus cut a bad hole in the bottom, the melter must throw fire-sand on these spots to slag off the iron and get it out of the bottom. This often requires a few hours in the evening, and is best done by a good night man, who looks after all the furnaces that may be in operation, leaving them in good condition for charging in the early morning.

Care must be taken to keep the bottom in good condition in front of the ports. Small particles of iron oxide produced by the scintillation of the iron are carried forwards with the gases as they leave the furnace and are deposited at white heat upon the edge of the bottom immediately below the

ports. Iron oxide at this high temperature combines very readily with silica, forming an easily fusible silicate of iron, which usually runs down on the slag on top of the heat, but may, if not watched carefully, cut down between the ports and the bottom and open a way for iron to escape and injure the furnace.

"Run-outs" of iron usually occur along the slag line, on account of the fact that the greatest corrosive action takes place here. Moreover, the covering of slag, probably left there by a careless melter, may conceal a lump of burned iron, which by oxidizing and uniting with the sand surrounding it gradually eats into, and finally cuts through, the lining. The first intimation of the existence of this condition is a red-hot spot somewhere along the ironwork of the pan or the brickwork encasing it. No time must be lost in checking the trouble, otherwise the molten iron is liable to cut through and run out, resulting in the loss of the charge and often very serious injury to the furnace.

REPAIRING THE FURNACE.

7. Repairing the Ports and Surrounding Brickwork. — The parts of the open-hearth furnace first to require repair are usually the brickwork surrounding the air and gas ports. These parts are subjected to the highest temperature of the flame during combustion, as well as the corrosive action of the burned gases as they strike the ports upon leaving the furnace. In a few months' time, therefore, it must be expected that light repairs must be made. In designing a furnace, allowance should always be made for considerable burning back of the ports before the crown is endangered. Fig. 7 shows the construction of this portion of the furnace, the dotted lines showing the wear after a few hundred heats have been taken.

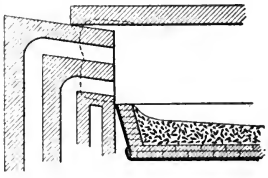

FIG. 7.

8. The **butterfly valve** should also be carefully watched, as it is liable to warp at the high temperature to which it is subjected. Inasmuch as the open-hearth process is essentially a gas process, it is necessary that the flues and valves through which the gas and air pass be as nearly gas-tight as the material of which they are constructed will permit. If the gas valve should leak, the gas thus escaping will mix with the waste products just emerging from the checker-work and pass up the chimney. The temperature existing in the flues promotes the ignition of this gas, and the valve and flues soon get red hot; finally the stack shows signs of undue heat and the melter investigates. By this time the valve may be cracked and ruined. By a careful daily inspection this trouble is detected at the beginning, and a little judicious chipping soon remedies it for the time being and allows the butterfly to seat itself properly. Both the gas and air valves should be inspected periodically, and if necessary, repaired in this way, as leakage of either hot air or gas into the stack causes a loss in efficiency. A number of valves have been introduced that aim to prevent the leakage by using a water seal. Some of these are very good, but they have the disadvantage of being rather expensive.

9. The **checkerwork** also should receive careful attention. It should neither be too open nor too closely laid. If the latter, it impedes the easy passage of the gases; if the former, they rush through without taking up or giving off heat. The space to be left is determined by the draft. With a strong chimney draft the spaces between the checker brick should be less than 1¼ inches, but with an old choked-up furnace the spaces should be larger.

In the furnace, considerable iron is burned to iron oxide, which is carried down through and deposited in the checker chambers and flues. These deposits may become so great as to seriously interfere with the draft, so that it is advisable occasionally open the furnace and clean it. This is exceedingly hot work, and should be undertaken before the trouble has gone too far. It may sometimes be necessary to remove

only one or two layers of the brick that form the checkerwork, as the oxide deposit usually coats these over, thus preventing the free flow of air through them, while the brick forming the lower portion of the checkerwork may be in as good condition as when it was put in.

Checkerwork for malleable purposes should preferably be made of firebrick of the first grade. Owing to the violent fluctuations in temperature to which they are subjected, a silica brick is less able to resist disintegration. Furthermore, the impinging of burned iron in the form of dust on a hot silica brick causes a glaze to be formed that partially destroys the heat-absorbing power possessed by a rough brick. In making repairs on a furnace it is important to lay the brick in such a way that when dipped into a thin mixture of clay and water, commonly called a clay puddle or grouting, placed in position, and pressed down, no surplus grouting runs down the courses below; if this is permitted, the natural roughness of the wall is destroyed and heat is not retained as well.

10. Repairing the Crown. — Patching the crown and work of like character can be done by lowering the temperature of the furnace just enough to allow the iron tools to hold their form while the work in hand is being done.

11. The Chimney.—The whole action of the furnace depends on the draft. This is generally furnished in a 15-ton open-hearth furnace by a steel chimney 80 feet high, 4 feet in diameter, lined with brick 4 inches thick, and provided with a plate damper at the base so that the draft can be easily regulated. A hole is placed in the side, through which lighted waste may be introduced in order to start the draft after the furnace has been shut down for some time. The current of air in such a chimney, when in full operation, should be sufficient to hold the water gauge at a pressure of .8 inch.

12. Charging the open-hearth furnace differs somewhat from coal-furnace, or air-furnace, practice. In the first

place, the furnace has probably been kept hot all night with a light flame, and about 2 hours before the time for charging the heat has been increased to as high a point as possible without injury to the furnace; the doors are raised and lowered quickly, as the charge goes in a little at a time. In coal-furnace practice the furnace is cold, or nearly so, and the whole top is removed to do the charging. The bottom of the open-hearth furnace must be in good condition.

The charging usually requires a gang of six men, two to pull up the doors, one of which is counterbalanced at one side of the furnace and the other two at the other side. The other four men shovel in the sprues and malleable scrap, the sprues being put in first. When the sprues and malleable scrap are all in, it is usually necessary to wait a few minutes to allow the charge of scrap to melt partially in order to make room for the pig iron. During this period of waiting the furnace also recovers a little of the temperature lost by the cold air coming in through the doors. A bar or roller *a*,

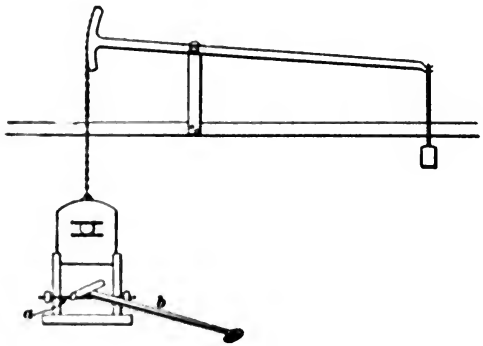

FIG. 8.

Fig. 8, is now placed in sockets, provided for the purpose, across one of the charging doors and the front end of a peel *b*, Fig. 9, is laid on it. Laborers then lay the pig iron, a piece at a time, on the peel, as shown in Fig. 8, and the helper raises the door while the melter moves the peel forwards and deposits the pig at the desired place.

Sometimes the sprues and small scrap is charged into the furnace by means of a charging box, which usually consists of a bar or handle similar to the charging peel, Fig. 9, but

FIG. 9.

somewhat lighter. A bowl made of malleable cast iron 16 or 18 inches in diameter is riveted to the peel near the front end, the latter being allowed to project far enough to rest upon the charging bar or roll in front of the furnace door. The sprues and small scrap, which are usually brought to the charging platform in small foundry, or tote, boxes, are poured from these into the bowl and charged into the furnace in the same manner as the pig iron. This method is much easier on the men than shoveling the material into the furnace, as the heat, when the charging doors are raised, is so intense that it is extremely hard for them to throw the material in with short-handled shovels.

When enough has been charged on the part of the bottom commanded by one charging door, the second and then the third doors are used, thus making the best distribution possible for the purpose of melting the iron in the shortest time. It takes about 1 hour to charge a 12-ton heat, and as there are three reversals of the gas and air during this time, an alteration of the flame from one side to the other may be obtained when a fresh pile of pig iron has been piled up in front of the ports, thus causing it to be heated very rapidly.

13. Charging machines of the form used in steel plants have been suggested for malleable-iron foundries, but their first cost and the room required to operate them are so great that it is generally admitted that they are economical only when the furnaces are large, of at least 20 tons capacity, and there are about eight of them in line. The requirements of steel manufacture, so far as charging is concerned, differ from those of malleable-iron foundries. In steel manufacture, it is desirable to place the charge into the furnace

as quickly as possible and to subject it to the cutting flame, which may oxidize it as much as desired, while in malleable-iron practice the charging must be done carefully and with some time between the charging of the lighter materials and the pig iron, in order that the latter may be immersed in a bath of molten iron covered by a coating of slag as speedily as possible so as to prevent oxidation. If the iron could be melted without any oxidation, it would be most desirable, but this can be done only with the crucible process, which is not used in American practice.

14. Arrangement of Tapping Spouts.—In coal-furnace, or air-furnace, practice it has been customary to tap the metal from one spout. In this case the bottom of the spout must not be higher than the lowest part of the bath, and the metal lying at the bottom is therefore drawn off first. As the top of the bath always has the highest temperature, since it is in direct contact with the hot gases, the coldest iron is drawn off first, and by the time the top reaches the spout it is apt to have been subjected to the action of the burning gases so long as to be spoiled, and much of it may occasionally have to be thrown away. In order to avoid this danger, the furnace is often equipped with two spouts, on one or both sides, one being set higher than the other, so as to permit the upper half to be drawn off first through the upper spout, then the lower half through the lower spout. The upper surface is thus removed before it has been subjected to the hot gases too long, while the lower, or colder, part of the bath is heated to the required temperature before it is drawn off.

In the open-hearth furnace of ordinary size, either one or two spouts arranged as indicated above may be used, depending on the size of the furnace, while the largest furnaces may be provided with three spouts so arranged that they divide the charge into three approximately equal parts.

When only one spout is used there is also danger that the test plug, the iron for which is dipped from the top of the bath, may not indicate the true condition of the iron at the

bottom, and the castings poured from the iron first drawn may be bad. Unfortunately, this fact is usually not detected until the castings have been annealed, and all the work done on them, in addition to the first cost of the casting, is lost. When the furnace is provided with two or three spouts this danger is almost entirely avoided.

15. The form of the bottom of the furnace and the arrangement of the spouts, when three are used, are shown

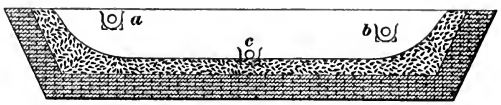

FIG. 10.

in Fig. 10, *a* being the highest spout, *b* the intermediate, and *c* the lowest, which should always be at the middle of the bottom.

While this arrangement of the spouts is used successfully with ordinary hand ladles, it can be used more advantageously in connection with a large ladle and a traveling crane. When the heat is ready and a crane is available, the upper spout is tapped into a 6-ton ladle suspended before it. A stream about 3 inches in diameter will fill the ladle with all the iron above the level of the upper tap hole in about 3 minutes. When the slag appears at this hole a clay plug is worked in, effectually stopping the flow of iron.

The ladle full of iron is carried to the part of the foundry where the iron is to be used, poured into hand ladles, from which it is poured into the molds by the molders. When nearly empty the large ladle is taken back; the small quantity of iron not used is probably quite cold, but is heated up again by the new charge tapped into the ladle. The second spout is now tapped and the operation of distributing and pouring repeated. This time all the iron is used for casting purposes. When the ladle is returned for the final tap, the clay closing the breast is carefully dug away from the outside and the breast pushed out from within. In about $\frac{1}{2}$ minute the remainder of the heat is in the ladle, which overflows

with slag, leaving the surface in the form of a boiling, seething mass. It is skimmed off roughly and taken to the molding floor; the slag remaining on the surface is allowed to incrust a little, when a small hole is broken through, and the iron poured into hand ladles, and the molds poured, as indicated above.

In this manner a 15-ton heat is taken out in ½ hour, the iron is uniform in temperature, being protected by the slag, also practically uniform in composition until the entire charge is poured out of the large ladle. In this way the iron can be made hot enough so that at any stage of the casting it will shoot out of the vent holes in the lower ends of the small molds that have been set on an incline, which is good evidence that its temperature is suitable for malleable casting.

16. The **tilting open-hearth furnace,** which accomplishes the same purpose as the three-spout open-hearth furnace, by allowing the upper and hotter part of the bath of iron to be poured first, is now being introduced. It has, however, the disadvantage of a very high first cost and a large cost for maintenance. The first cost is further increased by the installation of hydraulic machinery to operate the tilting mechanism.

The furnace is stationary in all its details, except the hearth and crown. These revolve past the ports when pouring the iron from the spout, which is normally above the slag line. Fig. 11 shows a cross-section of the furnace in which *a* is the pan, *b* the bottom, *c* the charging door, *d* the tapping spout, *e* the gas and air ports, *f* a sector attached to the pan upon which the furnace is supported, *g*, *g* rollers upon which the furnace is tilted, *h* a hydraulic cylinder by means of which the furnace is tilted, *i* a checker chamber, and *j* the charging platform. By applying hydraulic pressure to the cylinder *h* the furnace is made to roll upon

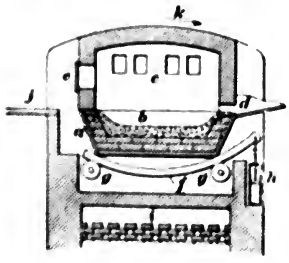

FIG. 11

the rollers g, g in the direction indicated by the arrow k until the spout d is lowered sufficiently to permit as much melted iron to run out as may be desired.

The ports of this type of furnace are very difficult to keep in repair, and an extra set already built up and enclosed by structural steel is usually kept on hand, so that those in use can readily be renewed if they should give way.

While these furnaces are to be recommended to new concerns with a large amount of money to invest, it is generally thought advisable for works already equipped with other types not to change to this form until its practical advantages have been more fully demonstrated.

17. Fuel for Open-Hearth Furnaces.—The **fuel** used in open-hearth furnaces may be natural gas, oil, or producer gas made from coal. The latter may be used directly in the furnace by allowing it to run through suitable pipes in the side walls or the interior brickwork of the furnace, or it may be sprayed into the furnace with steam or with compressed air. Where air is used, it may be taken either from a fan, positive blower, or an air compressor. The construction of the open-hearth furnace depends considerably on what kind of fuel is used.

18. Natural gas, which is extensively used in malleable works for melting and annealing, is an exceedingly rich fuel gas. It has about five times the heating value of ordinary coal gas and is equal to oil in fuel value. Experience has shown that in burning it for melting iron in the open-hearth furnace, the gas regenerative chambers can be dispensed with, in which case large regenerative chambers for air are used; the natural gas enters the air ports on the ends of the furnace, as shown at a and b, Fig. 12. These pipes are usually built in and protected with a firebrick covering in order to prevent undue waste of the iron of which they are composed. In this style of furnace only one Siemens valve is required, and the equipment may therefore be greatly simplified.

While in open-hearth furnaces in which only natural gas is used the air is generally passed through the regenerative chambers, it is not advisable to build them with only one set of chambers. The supply of natural gas is very uncertain, especially in winter, when it is frequently shut off from

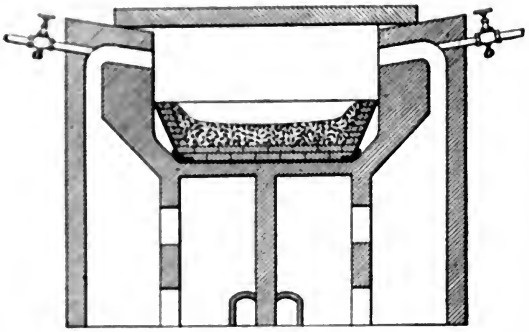

FIG. 12.

mills in order to supply the better-paying private customers. The regular open-hearth furnace with both sets of chambers should therefore be installed and the air allowed to go through both valves, while the gas is brought in as shown in Fig. 12.

Malleable cast iron has been made very successfully by passing the natural gas through regenerative chambers; this, however, produces an excessively hot flame, and the intense heat causes the metal to be oxidized too much as it melts down. When natural gas is used regeneratively a little steam should be admitted into the furnace over the gas valve, as this will effectually prevent the deposition of carbon at the entrance to the pipes and prevent their choking up.

19. Oil is now generally burned by spraying it into the furnace. The general arrangement of a burner suitable for this purpose is shown in Fig. 13. Oil is forced in through the tube *a* under a pressure of about 35 pounds per square inch, and is sprayed through a small hole, less than $\frac{1}{16}$ inch

in diameter. The air enters through the pipe *b* and carries the fine spray of oil into the furnace, where it is ignited and burned. If the temperature of the air is approximately that of the furnace, the oil will readily be gasified. When compressed air or steam is used, the air pipe surrounding the oil nozzle is made much smaller than when the air is

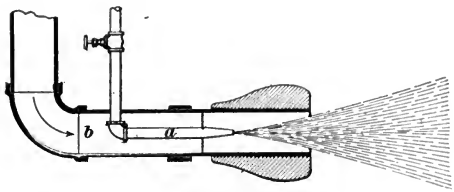

FIG. 13.

supplied by a blower. Opinions differ considerably regarding the most satisfactory air pressure to be used, some advocating a pressure of 1 pound produced by a positive blower, while others claim that the best results are obtained by using a pressure of about 40 pounds. The oil is sometimes introduced into the sides of the furnace, as illustrated in Fig. 14, the burners *a*, *b*, *c*, and *d* sloping downwards

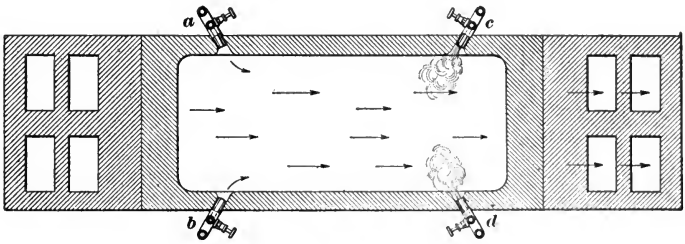

FIG. 14.

toward the hearth. In other cases the oil burners are located in the same position as the gas burners shown in Fig. 12. In this style of furnace it would also be possible to dispense with the second set of checker chambers, as in the case of the natural-gas furnace. If steam is available, there is an advantage in letting a little issue from the

burners that are not in use, as this tends to prevent the tips from being burned away.

In conveying the oil from the supply tank, which should be buried beneath the surface of the ground, a duplex self-governing pump should be used and a strainer placed before each burner, as otherwise the small hole in the end of the oil pipe is liable to become clogged so that no oil can pass through it. Oil can also be burned directly by simply letting a small stream flow down upon the melting iron. This method, while in a measure successful, is very hard on the furnace and is not to be recommended.

20. Producer gas is probably the most important gas with which the malleable-iron manufacturer has to deal. Modern producer gas is the product of a combined distillation and water-gas process. In the distillation process, coal is heated in a retort and gas is given off, leaving coke behind. In the water-gas process the temperature of coke is raised to incandescence and steam is introduced, cooling the coke, but making large quantities of carbonic oxide and hydrogen. For ordinary water gas, hard coal is used. Instead of raising the temperature of the coke and permitting the steam to blow upon it alternately, the steam is so introduced that it carries enough air with it to keep the temperature uniformly high enough to enable the gas to be formed continuously. The apparatus with which the gas is made is called a *producer*, and the gas is called *producer gas*.

21. Composition of Producer Gas. — Bituminous coal is generally used in making producer gas. The tarry products that are distilled off are allowed to go directly into the gas flues and are burned in the furnaces. A good producer gas should have the following composition:

Carbonic acid	4.5
Carbonic oxide	24.2
Hydrogen	12.6
Oxygen	.5
Nitrogen	58.2
	100.0

Carbonic acid is worthless as a fuel, and its presence above the 4.5 per cent. is a sign of carelessness somewhere. The presence of about that amount is, however, practically unavoidable.

Carbonic oxide is the constituent by means of which the greater part of the heat is produced. When burned with air it is converted into carbonic acid.

Hydrogen is a powerful heating agent. It produces a much more intense heat than carbonic oxide, but it is not very desirable for melting purposes. In burning, water is formed just at the ports of the furnace. Water when subjected to a very high temperature dissociates again into hydrogen and oxygen, the gases of which it is composed, abstracting the heat it gave out in burning. This process of associating and dissociating of hydrogen and oxygen may take place a number of times in the furnace until the last burning occurs at a point where the temperature is not high enough to produce dissociation. As this occurs in the checkerwork and not in the melting chamber, the effect is almost entirely lost. The direct value for melting of a gas rich in hydrogen is therefore much less than the total heat value would indicate. It is advisable, therefore, to keep the hydrogen as low as possible with a high percentage of carbonic oxide.

Oxygen is a very undesirable element in a gas, as it causes combustion in the flues, or even in the producer, thus burning a part of the gas before it reaches the furnace, and reducing its value as a fuel.

Nitrogen, of which the remainder of the gas is composed, does not burn and is valueless as a fuel. Unfortunately, its percentage cannot be reduced below 50 per cent., and more frequently it is 60 per cent.

22. The Gas Producer and Its Connections. Fig. 15 shows the cross-section of a producer in its simplest form. It consists of a shell of steel *a*, about 7 feet in diameter and 10 feet high, lined with 9-inch firebrick; a cover *b*, provided with the bell-and-hopper charging device *c*; a gas

outlet *d*; a grate *e*, upon which the coal falls through the charging device *c*; a set of poke holes *f*, *f*, through which the fire is broken up and kept open for the passage of steam and air; a steam siphon or blower *g*, through which air is taken in large quantities, and which operates at a steam pressure of about 45 pounds. The producer is set into a steel pan *h* filled with water, which forms a water seal that protects the lower part of the apparatus from leakage of air or gas, yet permits the ashes to be removed.

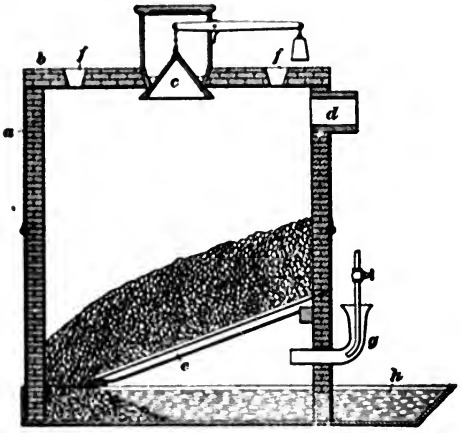

FIG. 15.

To start the producer, a wood fire is built in it, a load of coke is then added; when this is raised to incandescence the hopper *c* is filled with coal and the cover put on. The bell is now lowered and raised again, the coal dropping upon the bed of coke. In the meantime, steam is turned on and carefully regulated. Gas is generated immediately and forced out of the discharge pipe *d*. As soon as the soft coal strikes the incandescent coke, dense volumes of smoke are generated, which, however, should be used just as gas. The hopper is now filled, and the contents dropped upon the fire repeatedly until a good bed of red-hot coal about 2½ feet thick is distributed pretty evenly on the grate.

The amount of coal used will depend on the amount of gas required, and may vary from 300 to 600 pounds per hour for a producer 7 feet in diameter and 10 feet high. A producer 10 feet in diameter and 10 feet high will gasify from 1,000 to 1,200 pounds of coal per hour.

23. When a chemical laboratory is available the gas should be analyzed at least twice in 24 hours. Excessive amounts of the two injurious ingredients, oxygen and carbonic acid, are readily detected by a chemical analysis. As the air and steam strike the incandescent fuel on the grate two distinct reactions take place. There is first a formation of carbonic acid through the burning of the coal. This carbonic acid in passing upwards through the red-hot coal takes up extra carbon and becomes carbonic oxide, which is the valuable fuel constituent of the gas. If by analysis it should be found that there is an undue amount of carbonic acid in the gas, it is a sign of a thin or a cold fire, usually the former, the gasworker having permitted the bed of coal to burn down too far before replenishing it.

On the other hand, unless the fire is continually poked up, the clinkers broken and air channels through the coal destroyed, cold air is liable to come through the fuel and burn the gas before it leaves the producer. The quantity of oxygen in the gas will indicate whether or not this condition exists.

While the air drawn in causes the reactions described above, the steam is equally active. The air serves to keep the fuel in a state of incandescence, and the steam is continually decomposed into hydrogen and oxygen. The oxygen immediately combines with carbon and forms carbonic acid and carbonic oxide in turn. The hydrogen remains free and ascends through the coal fire into the gas flue uncombined. Usually the percentage of hydrogen varies from 10 to 13 per cent. The less hydrogen the better, provided the percentage of carbonic oxide is above 24 per cent. The gas burns with a rich yellow flame, is smoky, and has a tarry odor.

In a well-conducted gas plant the various chemical combinations are so complete that the ash as it comes out of the ash tanks is perfectly white and without a trace of coke cinders. It is wise, therefore, to inspect the ashes when they are removed, in order to see if the fullest measure of economy has been obtained. About 50,000 cubic feet of gas is made by this process from 1 ton of coal.

24. When gas leaves the producer it enters a breeching, shown in Fig. 16, which is connected with large overhead gas flues that may be 6 feet in diameter, through which it is conveyed to the furnaces. The breeching is connected to the producer at *a* and to the gas flue at *b*. A manhole is provided at *c* to clean out the ashes that may accumulate in the breeching. A safety damper *d*, which is blown open in case of an explosion, and a damper *e*, which may be closed when it is desired to cut one producer out of a series, are provided.

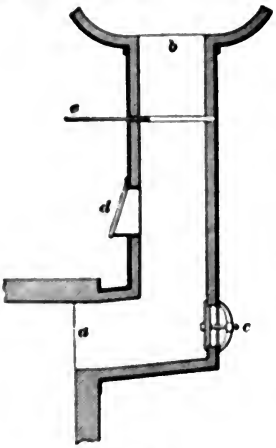

FIG. 16

All the ironwork of the breechings and flues is lined with 4-inch firebrick of No. 2, or even less, refractory quality. The farther away from the producer, the cheaper the quality of brick may be, as the temperature is gradually lowered as the gas is conveyed away from the producer.

Good judgment must be exercised in selecting suitable qualities for the different purposes for which brick is used. No. 1 firebrick is made of the finest and most refractory quality of clay. The material is sorted with the greatest care and the unburned brick is subjected to pressure by special machinery previous to entering the kiln. This brick is suitable for temperatures above 2,400° F. No. 2 brick is made of the same material, probably not so carefully selected,

not subjected to pressure before burning, and is therefore not suitable for temperature much above 2,000° F. Flue brick is made of inferior clays, and may run from white to light red in color. The best grades will withstand temperatures up to 1,600° F., while the poorest grades will withstand only about 1,000° F.

25. All along the main flues, large safety manholes, consisting of cast-iron saddles and covers, made gas-tight

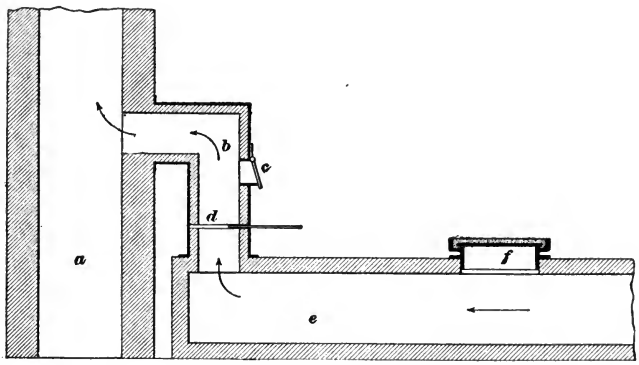

FIG. 17.

with a sand seal, are placed at intervals of about 100 feet. The end of the gas flue is connected with a stack and cut off from it with a damper, in order that the flues may be burned out about twice a week, so that the large amount of soot formed and deposited on the bottom, thus retarding the passage of the gas, may be removed. The connection with the chimney is illustrated in Fig. 17, the chimney being shown at *a*, the breeching connecting the flue with the chimney at *b*, a safety damper at *c*, a damper at *d*, the gas flue at *e*, and the safety manholes, showing the sand seal, at *f*. In burning out the flue, the damper *d*, Fig. 17, and the safety damper *d*, Fig. 16, are opened, and immediately the flame runs along the flue and into the chimney. In about 20 minutes all the soot will be burned out; the dampers are then replaced and gas made as usual. The dampers are

made to fit loosely in their guides, but the accumulation of tar upon them soon makes the joints gas-tight.

The connection with the open-hearth furnace is made through its gas valve. At this point a safety damper should be provided to prevent damage to the flues when an explosion occurs, as well as a regular plate damper to cut off the furnace when desired. The connection with the furnace should be at least 2 feet square; in fact all gas conduits should be very large, as the gas has only a fraction of an ounce pressure and a large volume is required in order to do the required heating in the furnace. The gas flues should be placed overhead whenever possible and a few bends should be inserted to take up the expansion and contraction due to the great variation of temperature to which it is subjected. It is more expensive to build an overhead steel shell lined with firebrick than to build an underground flue of flue brick and red brick only, but the underground flue will not stand the strain due to the variations of temperature, so that the overhead flue is more economical.

Producer gas, while presenting a different set of problems than natural gas, is equally as serviceable, makes good malleable iron, and when handled rightly is more reliable. In well-equipped plants the coal and the ashes are handled by conveyers and suitable dumping appliances, which leave only the work of the gas maker to be done by hand.

PREPARATION OF MOLDS FOR MALLEABLE CASTINGS.

26. The **molds for malleable-iron castings** are made in the same manner as green-sand molds for gray iron. In the matter of gating, however, there is some difference. Proper gating for malleable work is very important. Very often the failure of the iron to run may be ascribed as much to improper gating as to poor metal. Owing to the excessive shrinkage and the high temperature required to run thin sections, the gate must be made of sufficient size to prevent the iron from chilling before the farthest portions of

the mold are filled. The gate must also be carefully located at the most suitable place on the casting.

In gating small patterns, it is often necessary to provide a riser, commonly called a **shrinker** in malleable-foundry practice. The sudden cooling and shrinkage will cause spongy places unless some means is provided for feeding the metal to these parts. The shrinker may be of the same form as the pouring sprue and placed either on the gate, or it may be so located that it will feed the metal from a point outside of the casting. When the casting is too small to permit the use of these forms an enlargement may be made on the gate itself to provide a reservoir for feeding the parts where the shrinkage is liable to occur. These shrinkers are used in addition to the chills already mentioned. The shrinkage that is liable to occur in the center of a very heavy section is usually prevented by placing a large riser on the casting itself and breaking it off after the metal has set, but while it is still hot.

TAPPING AND POURING THE IRON.

27. Tapping the Iron.—In tapping out a heat the molders must form in lines and catch the metal in turn. It is essential that each man catch the iron promptly and that the line be unbroken. This will enable the melter to give the men a larger stream of metal, the heat is taken off more quickly, and the molders return to the floor or bench earlier than if the work were done in an irregular and unsystematic manner. To do this properly, it is necessary to have adequate space in front of the furnace, long bod sticks so that the men are not interfered with unnecessarily, a good foreman, molders who understand their work thoroughly, and every step of the process systematized as far as possible. When such a plan is in perfect operation the cost of the castings is reduced correspondingly.

It is very important that the heat be removed from the furnace as quickly as possible. If the pouring is prolonged unduly, the metal, which at the beginning of pouring was

hot and fluid, may become cool and sticky from the oxidizing process that goes on in the furnace, and which becomes even more rapid as the bath becomes thinner. For this reason it often occurs that the last portion of a heat, which at the beginning was in the right condition, must be thrown away or cast into pots.

28. Pouring the Iron.—In pouring the iron, it is necessary to place the lip of the ladle close to the pouring gate of the mold, and to pour the iron until the gate or the pouring basin, if one is provided, is just filled. By a very slight tilt of the ladle as much of the contents of the ladle as may be needed is shot into the mold. The castings for this class of work are exceedingly hard to run full, as the iron, in running through the damp sand of which the mold is composed, is liable to become chilled, and sometimes set, before the mold is completely filled. The iron for malleable castings must be very hot, and in order that it may fill the mold entirely before it is chilled, it must be poured as quickly as possible. It is claimed by some foundrymen that this can be accomplished better with the shallow form of ladle, shown in Fig. 18, as tilting the handle slightly will suddenly

FIG. 18

throw a larger body of metal into the mold. It is claimed by others, however, that the metal cools more rapidly in the shallow ladle, and that this cooling offsets the advantages claimed, while the metal can be poured as rapidly with the common deep ladle used in gray-iron foundries as the gate of the ordinary mold will carry it away. Some even prefer to use a ladle narrower at the top than the bottom, to prevent the iron from splashing or chilling.

Molders not aware of the tendency of the iron to chill in the mold may pour a number of castings and not notice their defects until they are shaken out of the sand. When there is any doubt as to the temperature of the iron, it is advisable to try it on a fairly thin casting and observe whether or not it runs out of the vent holes; if it does, it is usually considered safe to use it.

In practically all malleable works a limited number of gray-iron castings are made for their own use, especially when a cupola is used to make pots. It thus sometimes happens that gray iron is poured into malleable molds, and vice versa; the gang foreman must be especially careful to prevent this mistake, as a gray casting is ruined in the annealing oven and a white one cannot safely be used where one of gray iron is required.

CLEANING AND ASSORTING HARD CASTINGS.

29. Hard Tumbling.— In malleable-iron work the term **hard castings** is used to denote castings that have not been annealed, while **soft castings** are those that are annealed.

When the iron has been poured and the castings allowed to cool at least until they have turned black, or until they are perfectly cold, the mold is shaken out and the gates knocked off. The castings and gates are placed on separate piles along the gangways or they may be taken directly to the cleaning rooms and cleaned. The cleaning of ordinary castings is generally done by *tumbling* them in tumbling barrels that resemble those used in gray-iron foundries. The rooms in which the hard castings are cleaned are called the **hard-tumbling rooms** and the tumblers are called **hard tumblers.**

The tumbling creates a large amount of dust, for which reason it is generally done by a night shift, except where an exhaust system is used. With the large number of barrels required in a large foundry, the dust frequently becomes so

thick that it obscures the electric arc lights while the noise is at the same time deafening. It is, however, necessary to remove the sand from the castings before annealing them, as they would not otherwise be salable. The castings, therefore, go directly from the floors of the foundry to the tumbling barrels. When rods are used in the cores of large castings, these are removed before the castings go to the barrels. Small or delicate castings are not placed in barrels with large heavy work, but are cleaned separately.

It is, as a rule, advisable to tumble the sprues in a separate barrel of rather large dimensions, in which slag and skimmings containing globules of iron, called *shot iron*, that may have been carried off with the refuse or spilled in the handling, may also be tumbled. The spaces between the tumbling-barrel staves are very small, hence the dirt must be tumbled quite fine to sift through, and much shot iron that is too large to pass through the opening is therefore recovered.

30. The tumbling barrels, a type of which is shown in Fig. 19 generally consist of two heads *a*, *a*, with a set of

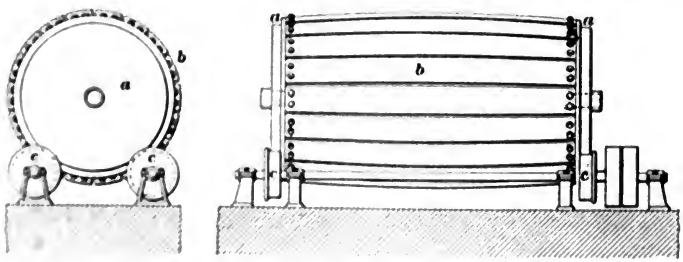

FIG. 19.

staves *b* bolted on them, the whole forming a structure shaped like a barrel. Sometimes, however, they are simply sheet steel drums. The barrels or drums rest upon friction rollers *c*, *c*, as shown, or are mounted on shafts that run in bearings and are driven by means of spur gearing or friction wheels. A good-sized barrel, about 3 feet in diameter and

5 feet long, usually requires about 5 horsepower to run it when charged.

31. In the best practice the tumbling barrels are equipped with an exhaust system attached to the rolling barrels, which prevents the dust from falling through the cracks between the barrel staves. The air is exhausted through a hollow shaft at the ends of the barrel and clean air is drawn in through the openings between the staves, or if a steel drum is used, through perforations in the head opposite the hollow shaft, only one exhaust opening being used in this case. By the use of the exhaust system, the air in the cleaning room is kept free from dust and the men are able to do more and better work.

Fig. 20 illustrates a plant equipped with such a system. The exhaust pipes *a* leading from the barrels are connected

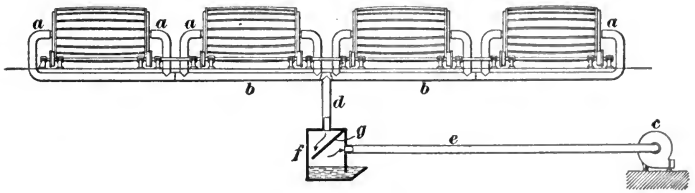

Fig. 20

to a main conduit *b*, which is connected to an exhaust fan *c*, through the conduits *d* and *e*, and the dust box *f*. The latter is provided with a deflector plate *g*, which causes the dust to drop into water in the bottom of the box. The water space is so constructed that it forms a water seal and at the same time permits the dust to be conveniently removed. This arrangement prevents the heavier particles from passing through the fan, thus preventing the grinding that would otherwise take place and lengthening the life of the fan.

The conduits should be so calculated that equal suction is exerted on each barrel without regard to the number of barrels in use, and blast gates should be provided at suitable points to make the system perfectly flexible. The exhaust fan is placed at the extreme end of the line, and if a water

seal is not used, provision should be made, if possible, to catch the dust in suitable pockets along the line. The finest material, which is drawn through the fan, is blown out into the open air.

32. The tumbling barrels of whatever type they may be are charged with a few hundred pounds of small, star-shaped, white-iron castings, commonly called **stars**, or broken pieces of white-iron sprues, which aid in cleaning the surfaces of the castings. The castings are put in on top of these until the barrels are about half full, when they are securely closed. The barrels are then set in motion and the castings tumbled until they are clean. The average time required to clean the castings is 10 minutes, though it sometimes takes a whole day; by the ease with which the cleaning is done the operator may know whether or not the iron has been overheated in the furnace and burned.

The object of tumbling, as stated above, is to remove the molding sand that adheres to the casting after the molds are shaken out. If the molds are shaken out when the castings are still hot, the sand is frequently burned on so strongly that the subsequent rolling does not remove it, but leaves a polished enamel of sand on the casting. This is due to the oxidation of the iron in the air while red hot and the formation of a silicate of iron with the sand, which is really a slag. If this material should be allowed to get into the annealing pots, where it would be in contact with the oxide of iron packing, it would produce more silicious slag and the castings would have a bad appearance and be unsalable.

The oxidation that takes place in the air when the molds are shaken out while the iron is still hot, and the consequent burning on of the sand, produces practically the same result as a burned heat, that is, a heat that has been oxidized in the furnace before it is tapped out. The internal angles of the castings will have long lines of burned sand, which can be removed only by chipping. As soon as the castings are clean, the barrel is stopped in a convenient position and opened, and the castings taken out.

When heavy castings are tumbled, sticks of wood are placed in the barrel to take the heavy blows of the metal. Sometimes the castings are even wedged into the barrels and the stars allowed to tumble about them as the barrels revolve. A good tumbling-room foreman will study his castings carefully before he puts them into the barrels and will so pack them that there will be the least possible loss by breakage.

33. Sand Blast.—Sand driven at a high velocity against a dirty casting will clean it in a few seconds, and in specialty shops this method, which is known as the **sand blast,** is gradually coming into general use. The apparatus required consists simply of sand reservoirs, with which a compressed-air supply pipe is connected in such a manner that the air drives the sand against the casting. A suitable hose conveys the air and sand to the place where it is to be used. Some auxiliary apparatus is also required for hoisting the sand to the tanks, washing out the dust, and drying it. While this method is very effective, it is exceedingly troublesome, expensive, disagreeable to the workmen, and shows the surface defects of a casting too plainly to be generally appreciated.

34. Cleaning by Hand.—A simple scratch brush, old files, chisels, and hammer are all the tools that are necessary to clean castings by hand. All delicate castings that may be injured by rough handling or by tumbling, or pieces required in a great hurry, are cleaned by this method.

As there is little facing used in malleable-iron molding, the castings are sometimes so thickly incrusted with sand as to be almost unrecognizable. The sand rolled or brushed off is in that case preserved and sent to the annealing room, where it is used to make the mud or mixture that is used to lute, or seal up, the openings about the oven doors, and also sometimes to cover the pots and the openings between the pot sections.

35. Pickling.—Hard castings are also cleaned by immersing them in a solution, called a **pickling solution,**

that removes the sand. This method is of great importance, for if properly done the cost will not be greater than when cleaned by tumbling. Two different solutions are successfully used for this purpose. In the one, sulphuric acid is the active agent, while in the other hydrofluoric acid is used. The latter is preferable, as it dissolves the sand, while sulphuric acid only dissolves the iron under the sand and thus permits it to fall off. The sulphuric-acid solution is made of about 1 part of sulphuric acid to 10 parts of water, and the hydrofluoric-acid solution of 1 part of hydrofluoric acid to 30 or 40 parts of water. Warming up promotes the action of both these solutions. When castings are cleaned by pickling, they are not broken, but they must generally remain in the bath over night, which causes considerable delay, when they must be produced in the shortest possible time.

Unusual precautions must be taken in handling these acids, especially the hydrofluoric, a drop of which in its concentrated form causes a sore that may take about 6 weeks to heal. It is advisable to use rubber gloves when handling it. Where pickling is carried on extensively the solution is kept in large wooden tanks, provided with lead steam siphon pumps to transfer the pickling fluid from one tank to another. Plenty of water must be available to wash the sand and scum out of the tank after the castings have been treated. If the castings are allowed to rust before they are pickled, they will come from the annealing process clean and free from scale.

It is advisable to have an extensive malleable-iron plant equipped with tumbling barrels, benches and chisels for hand cleaning, pickling baths, and possibly the sand blast, in order to be able to use any method that may be most suitable for the work in hand.

36. Assorting.—When the castings have been cleaned, they go to an assorting room, in which they are inspected carefully, defective ones are rejected, the gates chipped off, the castings separated into suitable classes and weighed, after which they are ready to go to the annealing room.

The assorting, or trimming, room is one of the most important departments of a malleable-iron works. Here all the bad work comes to light. If any pieces are rejected, the inspectors go over the bad work with the molders. Experienced men are required to do good work in this department; they must know how to discover hidden flaws, must chip off the gates without digging holes into the castings, yet remove all the unnecessary hard metal. The weighing is all done in this department and the pay of the piece workers made out. In order to do justice to the men and to the firm, men of good judgment and perfect honesty are required. The department should also be well organized in order that the work may be done in the most efficient manner.

A careful account should be kept of the number of good and bad pieces of an order, so that the molding loss of the day may be ascertained. In a well-organized shop this should not exceed 10 per cent. When it runs above this amount a careful investigation should be made to determine the causes, whether from the iron, the molding, or the cleaning, and immediate steps should be taken to correct the fault.

MALLEABLE CASTING.

(PART 3.)

MALLEABLE-IRON PRODUCTION.

(Continued.)

ANNEALING-DEPARTMENT PROCESSES AND EQUIPMENT.

ANNEALING PROCESS.

1. Chemical and Physical Changes Produced. The **annealing process** consists of heating the castings to the temperature necessary to change the carbon from combined to temper carbon, and holding them at that temperature until the change is completed. As the castings are held a long time at a red heat they must be packed in a suitable packing material, as explained later on, to prevent their warping and burning. It has been found, however, that the change in the condition of the carbon takes place independently of the surroundings of the castings if the temperature is just right; but if the temperature is too low, no change takes place; if too high, the castings are burned. It is not advisable, however, to attempt to do practical annealing without packing the castings in a suitable material, owing to the danger of burning them if the temperature should become too high.

When a casting is burned in annealing, the fracture is distinctly crystalline in appearance, but of an altogether different nature than the crystallization of the hard iron. The

For notice of copyright, see page immediately following the title page.

crystals are so hard that they scratch glass easily and are often as large as ¼ inch on their flat faces. When castings come from the annealing ovens without being fully annealed they should be repacked and reannealed, care being taken to place them in the least exposed portions of the oven to save them from burning. There is a general impression that such castings are spoiled, but this is not the case although they are undoubtedly weakened.

The annealing process to which the white castings are subjected in order to convert them into malleable iron, is intended to change the combined carbon to the form of temper carbon, and to remove a portion of the carbon from the iron lying near the surface, thereby making it approach the composition of steel as nearly as possible. This change in the percentage of carbon is illustrated in Fig. 1,

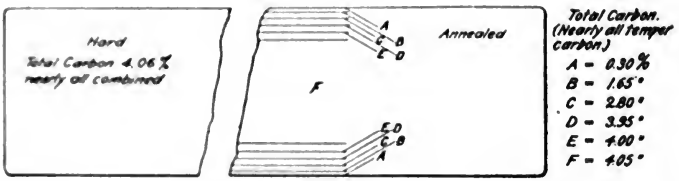

FIG. 1.

which represents a piece of hard iron broken in two and one portion of it annealed. The percentages of carbon in the annealed part, at intervals of $\frac{1}{16}$ inch from the surface, are given in the table at the right of the illustration. The data given were obtained by actual experiment. A sample about 1¼ inches thick was selected and cuts $\frac{1}{16}$ inch thick taken over it with a shaper, and the chips of each cut saved and analyzed. Before annealing, the casting contained 4.06 per cent. of carbon, nearly all combined. After annealing, the first $\frac{1}{16}$ inch contained only .3 per cent., the second 1.65 per cent., the third 2.8 per cent., the fourth 3.95 per cent., and the fifth 4 per cent., while the remainder of the piece averaged 4.05 per cent., only .01 per cent. lower than the percentage contained in the hard casting.

2. The carbon in the hard casting was nearly all of the combined form, while in the annealed part it was nearly all in the form of temper carbon. The effect of the decarbonizing, it will be seen, is scarcely noticeable beyond a depth of $\frac{3}{16}$ inch. Pieces that are only about $\frac{3}{8}$ inch thick will resemble steel in their nature; they may even be hardened by heating them properly and plunging them into water. It will, however, be noticed that the skin of the casting is too low in carbon to work well as steel, but it may be enriched in carbon, if desired, by a case-hardening process. It will then have a composition that will behave like steel, when not subjected to excessively hard treatment, and is much cheaper if used for tools that are expensive if forged. Milling cutters, chisels, and wood-working cutters made in this way give excellent service, and many hatchets and hammers are sold as cast steel that are in reality case-hardened and tempered malleable castings.

Another method of recarbonizing the skin of a malleable casting, which is practically wrought iron, consists of dipping the malleable castings into a crucible of melted high-carbon steel. This method is used especially in the manufacture of scissors. Case-hardening with potassium ferrocyanide (yellow prussiate of potash) gives the best results, however. Malleable iron made by the open-hearth process, in which the carbon is near the minimum limit, shows a nice black fracture. When heated to a red heat and plunged in water its structure will be changed to the finest steely grain and every sign of blackness will be gone, the temper carbon seemingly being recombined. The strength, however, is not great. In straightening warped castings, therefore, they should not be heated, as the recombining of the carbon again causes a white fracture and tends to destroy the power to resist shocks. They are therefore liable to be condemned and returned by the purchaser.

3. Extent to Which Annealing is Carried.—The extent to which the annealing process is carried depends largely on the amount of time available. When work must

be produced in a very short time and the duty of the castings is not too exacting, the time during which they are allowed to remain in the annealing oven is comparatively short. On the other hand, when the conditions permit or require it, the time is lengthened accordingly. In the case of emergency work, when it may be necessary to ship the castings the day after they are cast, they may be placed over night in an open-hearth melting furnace, the temperature of which is kept so that the castings are just short of a full red heat; in the morning the castings will be annealed sufficiently to ship, but the strength will be below that of castings that have been treated in the regular way. Castings annealed by this quick method should not be cooled in lime; in fact, lime should be kept away from the annealing room entirely, as it tends to eat out large blotches from the skin of the castings, and thus destroy their appearance.

4. Packing Materials.—Castings may be annealed when packed in sand, fireclay, or any other inert substance, but the skin will not be decarbonized to the same extent as when packed in oxide of iron. The object of packing in oxide of iron is therefore not only to hold up the form of the work, but to assist in removing some of the carbon. How this is done is yet in doubt. Some investigators claim that the oxygen penetrates the castings and actually burns the carbon out of them; others think that the iron burns first and that the carbon rather diffuses out in a manner similar to that in which sulphur is known to leave a casting on continued heating.

The packing material generally used for iron melted in a furnace is puddle scale, although rolling-mill scale is also used with good results. For iron melted in a cupola, hematite ore, pulverized, is better. A temperature of about 1,600 or 1,800° F. is required to anneal cupola iron, while furnace iron will anneal at a temperature as low as 1,250° F. and the temperature should not exceed 1,400° F. Hematite ore can be heated readily to the highest temperature given above without baking seriously, while puddle scale, being a

silicate of iron mixed with oxide, will fuse at 1,600° F., burn on the casting, and in melting will run between the castings. This tends to warp and bind them together, forming a mass that cannot be used in a malleable-iron foundry, and must usually be sold to blast furnaces at a very low price.

5. The necessity of thoroughly cleaning hard castings becomes apparent in the annealing process. If any of the molding sand is allowed to remain upon them, when subjected to a high temperature, it combines with the iron oxide in the scale and increases its fusibility. The silicon that enters the packing material soon works down to a fine dust; to prevent its accumulation in sufficiently large quantities to become seriously objectionable, the scale should be screened occasionally and the finest dust thrown away. When the scale has been overheated and baked together for a time there will be little dust to screen out.

In America, puddle scale is used almost exclusively as an annealing-furnace packing by the founders producing the heavier classes of work. This material, which is the slag squeezed out of the iron produced by the puddling process, always contains lumps of iron, which, however, are not objectionable. It should be clean and free from fine dust and fairly dry when received. When the first supply has been purchased, there should be no need of buying any more, as the pots in burning away furnish flakes of oxide of iron, which, when crushed, form ideal scale. There is a tendency for the scale to gradually work itself into a better oxide, as the silicates are screened out in the form of dust, leaving a clean, pure oxide of iron behind. This tendency may be hastened by sprinkling the scale with sal ammoniac dissolved in water after each time it has been used, to rust it thoroughly. This practice, however, is now abandoned almost entirely in the larger works, and more oxide in the scale is obtained by adding steel borings in order to let the oxidation attack these, thus sparing the castings.

When the scale has been used for some time, it should be in the form of grains about the size of a small pea. In this

form it readily runs between the castings and packs them tightly. Larger pieces cause air passages between the castings and also allow them to sink down and become warped; smaller pieces give trouble by baking together when the temperature becomes a little too high.

ANNEALING POTS AND FURNACES.

6. Annealing pots consist of three or four cast-iron boxes, without bottoms, set on a stool. They are preferably made of a special iron capable of resisting high temperatures, although many pots used are made from the regular malleable-iron mixture. The mixture, when especially prepared for this purpose, has been given in *Malleable Casting*, Part 1. Their shapes may vary considerably; they may be square, oblong, round, or have special shapes to suit the castings going into them; the form generally used, however, is shown in Fig. 2. The inside dimensions are 16 in. × 22 in. × 15 in.; the thickness of stock tapers from 1 inch down to ¾ inch, the taper being intended for draft in molding. One form of the stool on which the pots rest, which is cast of the same mixture as the pots, is shown in Fig. 3. The top plate *a* extends several inches beyond the end feet *b*, *b*, so that the prongs of a truck may be run under them for the purpose of picking them up and carrying them to and from the annealing oven.

FIG. 2.

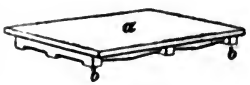

FIG. 3.

7. Packing the Annealing Pots.— In charging annealing pots, one box is set upon a stool and a few shovelfuls of scale thrown in to cover the bottom to a thickness of about 1 or 2 inches; then the castings are laid in closely and in such a way that they will readily resist any tendency to sag downwards. About 1 inch of scale should lie between the pot and the castings. The packer now fills in scale, stamping it down with bars, at the same time pounding the

box on both sides to settle down the scale into a tight mass. Layer upon layer of castings go in in this way. When the first box is filled, another box is placed upon it, then a third, and finally, if desired, a fourth one may be added. When long, slender castings are to be annealed, the fourth box is required.

When the packing is finished, either a plate of iron may be put on the top, or it may be covered with about 1 inch of mud, which is made up of the sand removed from the castings in the hard-tumbling room mixed with enough water to make a stiff paste. At the same time the cracks between the boxes, in fact, all openings, may be mudded up and the pot turned over to the charging gang. If mud is used, it must not be allowed to mix with the scale, and must be carefully cleaned off before the pots are emptied. This takes considerable time, and the pots are therefore often left open, the scale being simply rounded up on them. This, however, causes the scale to cake, but it is claimed that it is less expensive to tumble the scale occasionally than to clean off the mud after each heat.

In packing the pots, the following precautions should be taken: Delicate castings should go in the middle of the pot, where the heat is not so intense as at the top. If large, heavy castings are packed, light ones may go beside them with safety. If the castings are too thin to bear a weight above them, they may be placed in the upper part of a pot, but must be placed in the portion of the furnace farthest away from the fire; the same is true of castings that must be reannealed. When work is packed that it is essential to trace, or locate, immediately when the furnace has cooled, it is customary to place a brick on top of the pot, which acts as a good marker. The pots can also be streaked with mud, which is red and quite legible on the black background of the pot, when it emerges from the oven. Fig. 4 shows a pot that is ready to be placed in the oven.

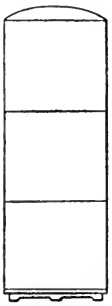

FIG. 4.

The course of the hot gases in an annealing oven is downward, so that the top of the pot is the most exposed to the action of the heat and hence wastes away more rapidly than the bottom. The annealing-room foreman must therefore be careful to work the upper sections of the pots gradually into the lower sections, so that an average service may be obtained from them all. New pots are liable to crack when first subjected to the high temperature of the annealing oven, but if they do not crack the first time, they will probably give good service. Unless a crack runs across opposite sides, the pot can still be used by placing a piece of an old annealing pot inside, thus covering up the crack, and luting it well with mud. Eventually, however, it will open up too much to be made serviceable in this way and must be discarded.

8. The **life of annealing pots** varies considerably. If the iron of which they are cast is too gray, they will last only 3 or 4 heats; if the iron is good, the average life is about 9 heats, when coal, oil, producer gas, or natural gas with no regulation is used. With natural gas carefully regulated to a low presssure and a constant supply, the actual average of a furnace full of pots has been found to be 19⅝ heats. This shows clearly that care in the management of the fires may effect a great saving in cost of pots alone.

The sides of the boxes will gradually bulge out and become rounded, the edges will waste away, and finally it will pay to discard them. They can be cut up and remelted in the regular cupola charge for annealing boxes; but this is not advisable, as they are heavily charged with oxide, which if used for the new boxes makes them less able to resist the high temperature.

9. Annealing Ovens.—The general principle of the annealing oven is the same as that of a down-draft furnace. Fig. 5 shows the arrangement of an oven equipped for the burning of natural gas. The gas and air enter the oven at one end *a*; the flame strikes the wall *b* and travels up, strikes the vaulted roof *c*, and is deflected downward; the hot gases then strike the pots *e* and pass down through

the flues *f* in the bottom of the oven and out through the flues *g*, *h* to the chimney *i*. A damper *j* is placed in the chimney flue *h* to regulate the draft.

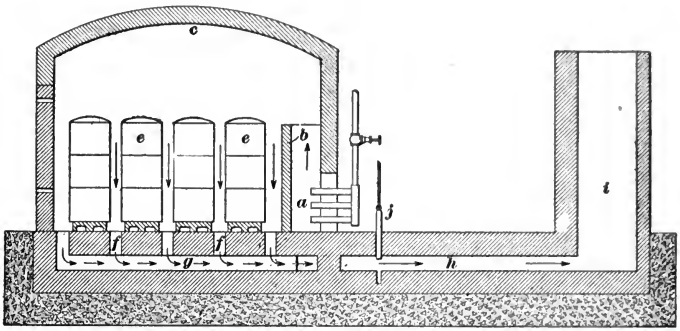

FIG. 5.

Ovens are usually built in batteries of five or six, if of a large size, and ten or twelve if small. They are built against one another and the tie-rods extended all along the top; much material is saved by this arrangement. The ovens are moreover kept fairly warm during the charging, as alternate ovens are usually kept in fire all the time, in order to keep the draft uniform, especially when they all communicate with one stack.

The temperature of an annealing oven is not as high as that of a melting furnace and it can be built of much cheaper material; No. 2 firebrick may be used for the lining and common red brick for the outside walls. The connecting walls between two ovens are made of 9-inch red brick faced with 4-inch firebrick, while the crown is made of 9-inch firebrick covered with 4-inch red brick, as shown in Fig. 6. Great care must be taken to get a good bond, or

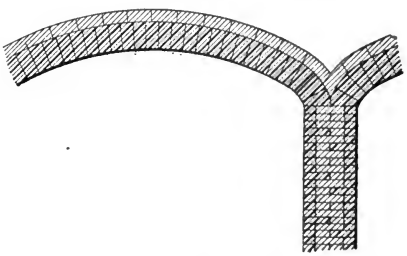

FIG. 6.

joint, between the two kinds, as the red brick is smaller than firebrick. The high heat has a tendency to disintegrate the brickwork eventually, and it must constantly be kept in repair by a bricklayer.

The floor of ovens that are charged by means of a truck is made of large tile, which covers the flues in which the escaping gases circulate before going out through the chimney flue, thus keeping the bottom hot. The floors of ovens charged by means of a crane are made of ordinary firebrick with a corresponding cheapening of the first cost.

10. The oven doors shown in Fig. 7 are made of heavy wrought-iron frames *a*, *a* well tied together with cross-braces, the spaces *b*, *b* being filled with firebrick. The doors shown loosely fit into the door frame *c* and have a space *d*, the width of one brick, between the halves. The doors are lifted by inserting the prongs of the charging truck into the openings *e*, *e* at the bottom, which are provided for this purpose. The doors are also frequently hung on heavy hinges, so that they can be swung out of the way while charging or discharging. The hinged doors fit against the outer faces of the frames, and when closed the openings along the edges are made air-tight by mudding them up. The doors when hinged are usually built up of angle and T iron, so as to hold the brick more firmly. A space the width of one brick is left between the halves, as in the doors shown in Fig. 7.

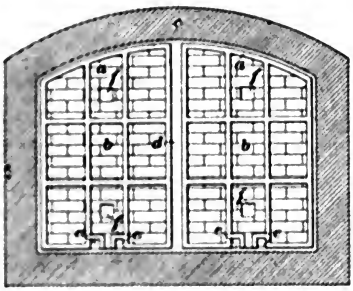

FIG. 7.

Four peep holes *f* are made in the doors in order to observe the condition of the flame in the upper part, and the heat of the pots in the lower part of the furnace. The firing is all done at the one side of the rear of the furnace, hence a good view is obtained by looking through the upper holes

The oven tender or foreman regulates the fire by the length of the flame he sees, as well as the temperature. The front of the oven at the bottom is the coldest part, and tests are therefore made at this point with a pyrometer, to see if the temperature required to perfect the process is attained.

11. Fig. 8 shows a plan of the bottom of the oven, in which *a* is the firebox, or combustion chamber, *b*, *b* are the

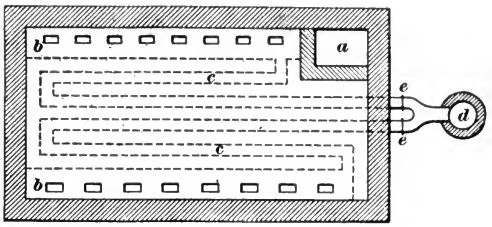

FIG. 8.

openings through the floor into the flues *c*, *c*, which lead to the chimney *d*. Dampers *e*, *e* are placed in the flues near the chimney to regulate the draft. The openings *b* are regulated by the oven tender, who covers as many as may be necessary to distribute the heat as required. The tops of the flues are often covered by arched brickwork, but this is quite expensive. A less expensive method of covering them is illustrated in Fig. 9, the flues being shown at *a*.

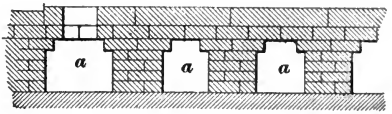

FIG. 9.

The dampers *e*, *e*, Fig. 8, are made of flat cast iron and hung in cast-iron frames. They are counterweighted, and should be kept closed as far as possible, as too great an opening permits a great loss of heat from the oven.

In order to obtain a more uniform temperature throughout, some ovens have air spaces in the side walls to prevent radiation, and others have double crowns, the hot gases being allowed to circulate between them. While these ovens work very well, both the first cost and the cost of

maintenance are very high, and there is some question among malleable-iron experts whether they are really economical. It is, of course, desirable to have a uniform temperature in the oven, but it has been found that when the bottom is properly cared for there is only a difference of 50° F. between the hottest and coldest parts of the best ovens of this class, and about 200° F. in the ordinary ovens.

PROVISIONS FOR HEATING ANNEALING OVENS.

12. The **fuel used in annealing ovens** may be either coal, coke, natural gas, producer gas, or oil, while recently some experiments have been made with coal dust. Each fuel requires somewhat different treatment in order to produce the best results.

13. Coal-Burning Equipment.—Fig. 10 shows the firebox for ordinary coal or coke burning, *a* being the grate, *b* the fire-door, *c* the ash-pit door, *d* the bridge wall, and *e* the crown of the oven. The firing with this style of furnace does not differ from the method of firing an ordinary steam boiler, except that the fire is slow. A thick bed of fuel is used and the air passages kept closed as much as possible, in order to keep out all unnecessary cold air. The fires are cleaned periodically and a steady heat maintained. Soft coal gives the best results, as it burns with a long smoky flame; when the furnace is once hot, this smoke is readily consumed and gives no trouble. The supply of coal should be convenient to the ovens, which in a large foundry are usually arranged along the side walls with the fireboxes opposite windows through which the coal

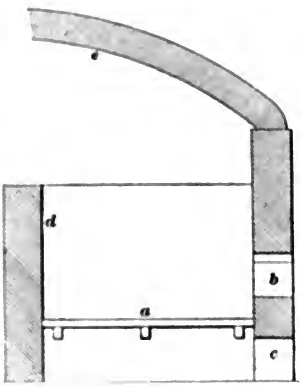

FIG. 10.

is brought into the building. When a railroad siding can be brought along the side of the building, so that the coal can be transferred directly from the cars to the piles in front of the furnace doors, it greatly reduces the cost of handling.

The furnace shown in Fig. 10 is applicable to single ovens only. When the ovens are built double a slightly different arrangement is used. Fig. 11 (*a*) shows an end view and

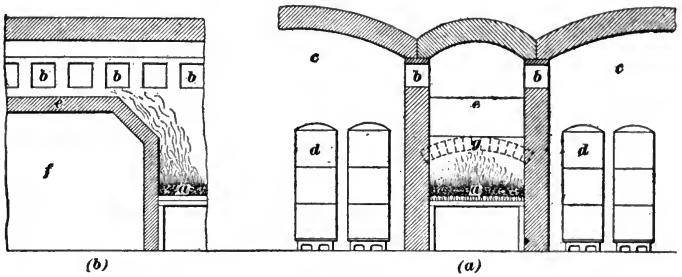

FIG. 11.

Fig. 11 (*b*) a side view of the firebox used in this case, in which *a* is the grate, *b* the openings through which the hot gases pass from the firebox into the ovens *c*, and *d* annealing pots in the position in which they stand during the annealing process. A bridge wall *e* carries the flame upwards toward the ports *b*. The space *f* beneath the bridge wall is filled with clay, broken brick, or any other material that will not press outwards when it is baked. An arch *g* is built in, both at the front and the back of the furnace, forming the top of the fire-doors at the front and an opening to the space below the bridge wall at the back. This firebox is really a special furnace built in between the side walls of two ovens. While the results obtained from this system are generally good, it takes longer to heat the ovens than in the case of single ovens, and any difficulty with the regulation of the draft will cause the castings to be imperfectly annealed in at least one of the ovens. A separate fire for each oven is therefore preferable, even though it takes the room of several pots.

14. Gas-Burning Equipment.—When natural or producer gas, oil, or coal dust is used as a fuel, the space occupied by the grate may be considerably shorter than when coal is used, as in these cases only a combustion chamber is required.

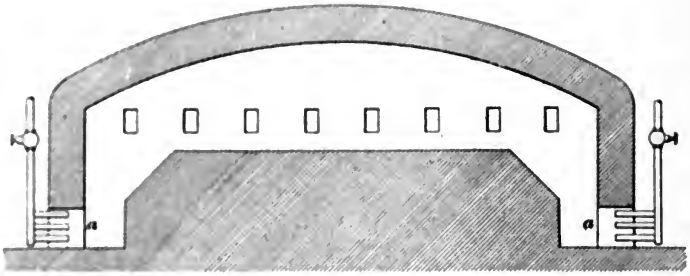

FIG. 12

In Fig. 5 the ordinary arrangement for natural gas is shown. In the case of double ovens there is a firebox *a*, *a* at each end, as shown in Fig. 12, in the space between the two ovens.

In some works, especially where natural gas at a high pressure is available, it is allowed to enter the oven directly, an air mixer being attached to the end of the gas pipe. This practically does away with the firebox altogether, and therefore increases the capacity of the annealing oven. Fig. 13 illustrates the positions of the burners *a*, *a* with

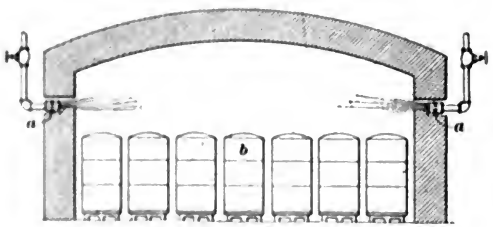

FIG. 13.

reference to the annealing pots *b*. This method is rather hard on the pots, unless there is plenty of headroom over them, in which the burning gases may become somewhat diffused before they reach the pots.

The principle of the air mixer commonly used is illustrated in Fig. 14. The gas enters through the tube *a*, into the chamber *b*, where it is mixed with the air drawn in through the openings *c*, the mixture passing out through the nozzle *d*, at the mouth of which it burns in a blue flame. The flow of air is regulated by means of a plate *e*, with holes corresponding to the holes *c*, which may be turned so as to make the opening of such a size that the required amount of air will be admitted. While a gas mixer is desirable when heating an oven with a natural-gas burner, experience has shown that after the full heat is obtained the direct flame gives the best heat. When the gas comes in under low pressure no trouble will be experienced in obtaining a perfect combustion. The gas is burned farther in the furnace and a more even distribution of the heat is therefore obtained. With a blue flame there is an intense local heat at the end of the oven nearest the burner, but too high a temperature must be maintained at that point to produce a sufficiently high temperature in the colder portions of the oven to anneal properly, and the parts subjected to the excessive temperature are liable to be injured thereby.

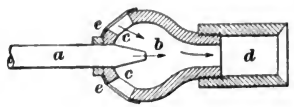

FIG. 14

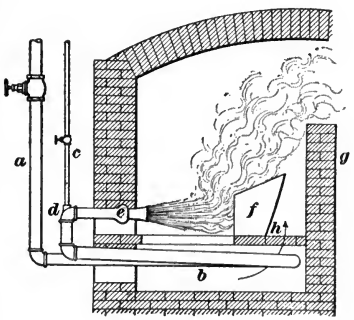

FIG. 15.

15. Oil-Burning Equipment.—Oil may be sprayed into a combustion chamber either with steam or compressed air. Air gives the best results, but opinions differ greatly as to the best pressure to be used, some advocating a pressure of 6 ounces, while others maintain that a pressure of 40 pounds per square inch will give the best results. Fig. 15 shows the arrangement of

the firebox of an oil-burning oven. The air enters the oven through the pipe *a* and passes through a coil of pipe *b* in the firebox, where it becomes heated and comes up and meets the oil that enters through the pipe *c*, at *d*. The oil and air then pass through the burner *e* and ignite as they emerge from it. The oil usually enters the burner under a pressure of about 45 pounds per square inch. The burner ordinarily used is shown in Fig. 13, *Malleable Casting*, Part 2. A tile *f* placed on end before the burner, breaks the force of the air and oil and protects the bridge wall *g*. It also mixes the oil and air intimately, and thus aids the combustion. An air passage *h* is provided behind the tile to furnish more oxygen to the flame and carry it upwards. The air spaces shown at the entrance of the firebox are usually reduced by inserting loose firebricks, which are added or removed according to the judgment of the oven tender.

One of the troubles met with in the burning of oil is the formation of great masses of gas carbon, which is almost as refractory as graphite and must be removed from time to time. An oil strainer must also be placed before the burner so that the small orifice through which the oil is forced may not be clogged by the particles of solid matter that are liable to collect in the supply tanks or pipes. Oil burning is excessively hard on the parts of the furnace nearest the burner. The heat is even more intense than that of natural gas when the mixer is used, and in order to obtain a sufficiently high temperature in the cooler parts of the oven, it is often necessary to have the flame at the burner so hot that the roof of the firebox is injured.

16. Coal-Dust-Burning Equipment.—Coal dust is now used as a fuel for annealing ovens in malleable-iron works in this country, although its use is yet in its experimental stage. The apparatus used in burning it resembles the oil burner shown in Fig. 15, except that the oil pipe *c* is replaced by a coal-dust hopper. The coal is ground so fine that the ashes formed either settle in or pass out through the chimney, scarcely ever giving trouble in the oven flues.

Although this method of heating the oven has not yet been proved a complete success, it is thought by some malleable-iron experts that it may, when perfected, prove very valuable.

17. Producer-Gas-Burning Equipment.—Producer gas is probably the most difficult fuel to use, but when the entire apparatus is once running successfully it is equally as good as either natural gas or coal. As the quantity of air and gas entering the oven should be as small as possible in order to maintain the required heat in the oven, the quality of the gas must be good. If the quality is poor, so much air is drawn in with it that the oven is not heated properly and the annealing is not done satisfactorily. The simplest method of burning producer gas is shown in Fig. 16, in which *a* is

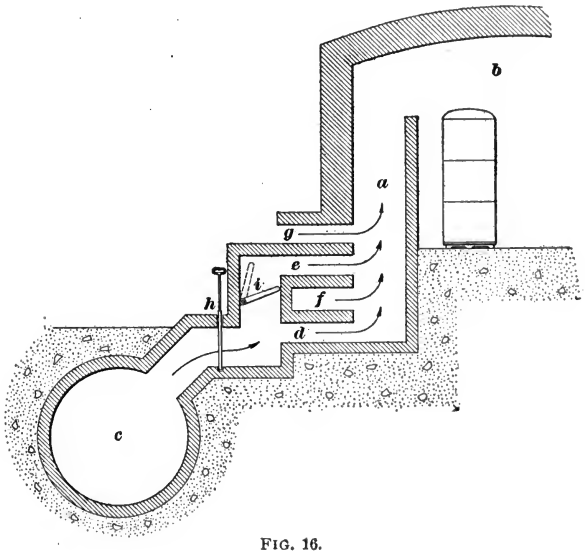

FIG. 16.

the combustion chamber, or firebox, and *b* the oven. The gas enters the combustion chamber from the main gas flue *c* through the gas ports *d*, *e*, while the air enters through the ports *f*, *g*, the air being admitted over the gas. A damper *h*

is placed in the gas connection to regulate the flow of gas or cut it off entirely. Two sets of gas and air ports enter the combustion chamber in order to insure a sufficient supply of each. In burning producer gas tar is formed and runs down, tending to close the lower ports. As these become clogged the upper ones are opened gradually, thus maintaining a constant supply; the damper *i* in the upper gas connection is provided for this purpose. The entire burning apparatus is enclosed in a cast-iron box made of plates bolted together. This arrangement gives very satisfactory results.

Another form of producer-gas-burning apparatus for annealing purposes, which has proved very successful, is shown in Fig. 17. In this case, only one air inlet port *a* and one gas inlet port *b* are used. The gas supply is regulated by means of a valve *c*, which is controlled by a hand wheel and screw *d*, and the air supply, by opening or closing the air channel. A damper *e* is also provided for cutting off the oven from the gas flue *f*. This arrangement of the burning apparatus gives even less trouble from the accumulation of tar than that just described. The valves and ports of both, however, must be burned out at the same time as the flue, or they will soon become choked with soot and tar. There is also a tendency for the flame to strike back into the ports and flues, causing a precipitation of carbon in the flue, between the gas main and the ports, which sometimes necessitates tearing them out, as this carbon will not burn out with the soot, being almost as refractory as the oil carbon referred to. Great

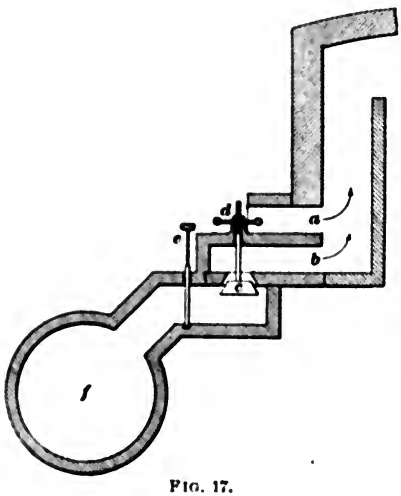

FIG. 17.

care must be taken to inspect the gas boxes very frequently to see that the gas does not burn within them. If it does, the flues will soon become choked and all the ovens may have to be shut down long enough to remove the trouble. A part or even the whole charge of the oven may be spoiled and much delay and annoyance caused.

18. The Oven Chimney.—In the most recent practice, ten or more annealing ovens are connected with one chimney, generally about 80 feet high and about 4 feet inside diameter, with a 4-inch lining. When the heats are steady, such an arrangement gives good results and effects a considerable saving in both the first cost of the plant and the cost of repairs. When, however, the works are liable to be run intermittently, it is often advisable to have a small stack for each oven, as in that case there will be no loss of fuel and time in starting the draft. When several ovens are connected with one chimney, considerable trouble is often experienced from this cause. In starting up the ovens connected with a single chimney, a good fire lighted in its base will assist considerably in producing a good draft.

OPERATING ANNEALING OVENS.

19. Charging the Ovens.—When the annealing pots are properly packed, so as to prevent air passages forming in the packing material, they are taken to the oven by means of a **charging truck,** one form of which is shown in Fig. 18, which consists of two arms *a*, *a* with handles *b*, *b* at one end, and prongs *c*, *c* at the other end, mounted upon a truck *d*, *d*. The arms *a*, *a* are so connected to the axle of the truck that when the lever *e* is in the raised position shown, the prongs *c*, *c* readily run under the lips at the end of the stool under the pots; and when the lever is lowered so as to catch under the hook *f*, the pots are raised from the floor and may readily be carried to the oven. The small wheels *g*, which turn on a pivot, support the handles, thus facilitating the handling of the truck.

A gang of men take the charging truck, and raising the lever e, let the two prongs c, c down to their lowest position and run the truck under the pot, the prongs catching under the lips of the stool. The lever is then drawn down and caught under the hook f; this lifts the prongs high enough to raise the pot off the floor. The truck is now pushed into

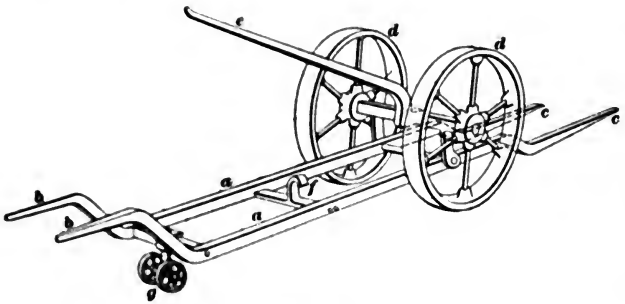

FIG. 18.

the oven and the pot lowered in the position desired. Six men are usually required for this operation. The truck is made long enough to reach to the rear of the oven, and yet extend out far enough to enable the men to remove the last row of pots from the oven while it is still quite hot, without being burned. The same truck is also used to remove the oven doors, when they are not hinged. They are held upon the truck by the men by means of suitable iron hooks, to prevent their falling over.

Another shorter and lighter truck of the same general design may be used to carry the pots from one place to another in the annealing room, the great length of the charging truck making it inconvenient for this purpose. A light electric or pneumatic traveling crane is also used in some foundries to carry the pots about the annealing-room floor. Such a crane may be operated either from a cage or from the foundry floor.

20. Firing the Ovens. — The oven having been charged, the doors are closed, the cracks are carefully filled

with pieces of brick, commonly called *bats*, and mud. If gas is used as a fuel, oily waste is lighted and placed in the firebox and the gas turned on; if coal is used, the fires are started without any special precautions. In firing with gas, it occasionally does not ignite at once, the draft carrying it into the oven too quickly. This usually results in an explosion, which frequently ruins the roof of the oven, blows out the doors, and sometimes causes fatal injuries to men working near by.

When the fires are first lighted, the dampers are kept partly open, and nothing but smoke is seen in the oven and coming out of the chimney. In about 6 hours the smoke becomes lighter; in 12 hours a faint redness should be visible, with but little smoke; and in 24 hours a good heat should be obtained. In 36 hours the oven should be heated to the required temperature, and a *pyrometer*, which is an instrument by means of which high temperatures are measured, used to regulate the temperature properly.

With furnace iron, the coldest part of the oven should never fall below 1,250° F., and it should preferably be 1,350° F., but not over. In annealing, the temperature should be raised as rapidly as possible to full heat, then held stationary at this temperature for the required time, which may vary from 4 to 6 days, and finally allowed to cool down as slowly as time will permit; the best iron is obtained in this way. Thus, with a 6-day anneal, 36 hours is required to heat up and 24 hours to cool down, leaving 84 hours, or 3½ days, for the full heat. Good work has, however, been produced in 72 hours, and other work has taken as much as 216 hours to anneal properly.

21. Measurement of Oven Temperatures.—Two different pyrometers are used for this purpose, the old *Siemens water pyrometer* and the *Le Chatelier pyrometer*. The former is very simple, but requires considerable time to obtain the temperature accurately, while the latter indicates the temperature more quickly, but is more expensive.

The **Siemens water pyrometer** consists of a copper vessel containing a weighed quantity of water, whose temperature is noted by a thermometer placed within. A weighed copper ball, or cylinder, is now heated in the oven for 10 minutes and quickly plunged into this water, shaken up, and the rise in temperature noted. A scale that is provided with the thermometer indicates the temperature of the copper ball. Suitable precautions should be taken to prevent the escape of heat during this process, which, if carefully done, indicates the temperature within 25° F. As it is essential that the temperature of the pots and not that of the oven be taken, the copper cylinder is placed in an iron holder against the coldest pot in the oven, that is, in the front row, farthest from the fire, and opposite the lower peep hole, as shown in Fig. 19, in which *a* represents the copper cylinder, *b* the holder, *c* the annealing pot, and *d* the peep hole in the door. The copper cylinder is then surrounded by iron and touches the pot. There can thus be no overheating, and in about 10 minutes the temperature of the copper is practically equal to that of the pot, and the test may be completed. It is also well to cover the peep hole with a cover-plate *e* while heating up the cylinder to prevent an inward draft of cold air. When a number of tests is to be made, three or four rods can be kept heating continuously; but in this case care must be taken that the required amount of water is used each time, as there is some loss whenever the cylinder is plunged in and removed.

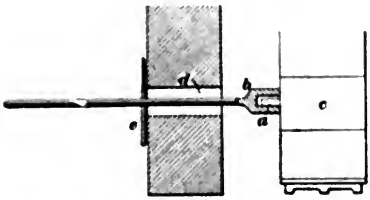

FIG. 19.

When cupola iron is to be annealed, this pyrometer cannot be used advantageously, as the temperature required is too near the melting point of copper. The experienced annealer therefore usually looks for a crack in the brickwork and notes the whiteness of the joints, which indicates quite closely the temperature within the oven. It is always best

to have two or more men responsible for these temperature observations, as the eyes of one man may occasionally change and eventually lose their power to observe the temperature accurately.

The **Le Chatelier pyrometer** consists of a wire of platinum and another wire of an alloy of platinum and 10 per cent. of rhodium. These wires are fused together, and when the joint is heated a current of electricity is produced that is proportional in strength to the temperature applied. It is necessary therefore simply to measure the current of electricity with a galvanometer suitably calibrated. As it takes only a few seconds to take the reading, the instrument is very valuable in connection with a malleable-iron foundry.

22. Discharging the Ovens.—When the annealing process is complete the fire is shut off, the oven allowed to stand a little while to lose the intensity of the heat, and the bricks loosened from between the doors. This allows cold air to enter, and reduces the temperature sufficiently to allow the doors to be taken away in about 12 hours after shutting off the fire. The pots may now be taken out slowly and stacked in long rows, where the contents may be dumped out conveniently, the charging truck being used for this purpose.

23. Shaking Out the Pots.—When the pots are cold enough to dump, the clay and sand luting, if any is used, is carefully removed so as not to contaminate the scale; the pots are generally tilted over by means of a crowbar and hammered to break off the flakes of scale that may adhere to them. The pots are then removed and placed where a new lot of castings can be packed into them, and the annealed castings carefully picked out of the scale. The hammer must frequently be used to free the castings from the scale, as they are often baked together quite firmly and the holes filled up with burned scale. When the castings have been picked out, they are removed to the cleaning department.

A more convenient method is to raise the pots with an air hoist, and to rap them on the side with a heavy hammer until the scale becomes loosened and the scale and castings fall out.

24. Disposition of Castings and Packing Material.—Small castings and scale, as they come from the annealing pots, are sometimes put directly into a coarse tumbling barrel with perforated staves and tumbled until the packing has sifted out and only the castings remain. The castings are shaken out of the annealing pots into carrying boxes, from which they are emptied into the tumbling barrels.

When the scale is not put into tumbling barrels with the castings, it is preferably screened in a coarse revolving screen into which several bars of iron have been placed. These break up the lumps and cause the scale to pass through the meshes of the screen. Any stray castings are also caught by this process. In some foundries the scale is spread, wetted down with sal-ammoniac water, and allowed to rust over night; the next day it is used to pack a new lot of hard castings. In many large foundries the use of sal-ammoniac water has, however, been discontinued, but wrought-iron or steel borings are added to the scale, in order to keep it rich in oxide and in a measure prevent its sticking to the casting.

DISPOSITION OF ANNEALED CASTINGS.

25. Soft Tumbling.—It is necessary after the castings come from the annealing room to tumble them in order to remove any scale that may adhere to them. Since, after annealing, the castings are commonly said to be soft, this process is called **soft tumbling.** The simplest method of tumbling is to place the castings in tumbling barrels, add a quantity of small pieces of broken annealed castings, and let the whole revolve until the work is clean and polished. The annealed pieces of scrap usually consist of test plugs broken from large castings. The temper carbon and soft iron of the annealed pieces rapidly produce a bright, black, polished surface. The tumbling must not be continued too long, however, or the sharp corners are rounded too much, which makes them unsalable.

Generally the soft-tumbling room is separate from the hard-tumbling room; when, however, a foundry is crowded with orders the work is adjusted between the two as may be most convenient. When this is done, great care must be taken to keep the hard and soft castings separate, as the average man cannot distinguish between an annealed and a hard casting, and unannealed work is therefore sometimes shipped and used with disastrous consequences. Annealed castings are also sometimes annealed over again. Continued practice will, however, in time enable the annealing-room men to distinguish between the two kinds.

When the castings are rather delicate, blocks of wood are thrown into the barrels to protect the castings in a measure from being bent and pounded out of shape. Very light castings that are to be polished or plated must receive special care. When they are to be highly polished in the tumbling barrels, only a part of the pieces of soft iron ordinarily used are put in the barrel, but with these are put pieces of leather, old shoes, and similar materials. This produces a polish that resembles that of work which has been specially buffed piece by piece; small buckles for straps, pistol parts, general hardware, etc., are finished for the makers in this way.

26. Finishing and Assorting.— Where specialties are made of light work, considerable special machinery may be introduced advantageously for the purpose of polishing, assorting, and handling the work. The form of the specialty will usually readily enable one to decide where and how such special machinery can be used economically.

This class of work should need no grinding; all gates should be trimmed off nicely before annealing. If, however, this has been neglected, the castings must be ground and chipped before they are assorted. If there are parts of gates that were not completely chipped off when the casting was hard, it must be done now. If the molder has rapped the pattern too hard and the casting is therefore too long,

part of it must be ground off. It is therefore necessary to have a grinding room for annealed castings. A large room of this kind is, however, always a sign of laxity in the pattern shop, foundry, or trimming and inspecting room.

Two kinds of emery grinding wheels should be provided, some heavy ones and others of medium size. The large wheels are preferably of the variety provided with large cast-iron cores. For general work the wheels should be mounted on substantial iron stands; for very heavy work, however, wooden stands are preferable, as they tend to decrease the vibration. Two wheels may be mounted on each grinding head, thus economizing in both space and cost of machinery. The speed should be high enough to do fast cutting. Medium to soft wheels give the best results; hard wheels glaze so rapidly that they must be dressed too often. The wheels should not be used until the diameters are too small, for the cutting speed is reduced to such an extent that the iron is not ground off freely, and a new wheel will soon pay its cost in the greater amount of work that can be done with it in the same time.

When wheels with rubber as a binding medium for the emery are used, special care must be taken to clean the dust from the wooden girders of the grinding room, for any leakage of the roof is liable to rust the fine iron dust so rapidly that a red heat is produced, thus igniting the particles of rubber in the dust and burning the buildings.

27. From the grinding department the castings go to the chipping or finishing department. Here all fins too large to be ground away are chipped off, and holes left imperfect by bad cores are cleaned out and if necessary drifted to size with specially constructed tools. A number of chippers' vises of large sizes are used for this purpose. The castings are brought to the chipper and placed on the bench; when finished they are thrown on a pile on the floor. Suitable bins for storing the different kinds of castings are a great convenience and save a large amount of time in

filling orders. Occasionally it is found cheaper to drill some holes than to core them out; when this is the case they are drilled in the finishing room, one or more drilling machines usually being provided for this purpose. Then again a casting may come from the foundry with large lumps of iron on it that could not safely be trimmed off before annealing, owing to the danger of injuring the casting; for this class of work a shaper is very serviceable and should be included in the finishing-room equipment. If, however, the cost of finishing such castings is greater than the cost of a new mold, the casting should not be allowed to go to the annealing oven.

A small drop hammer should also be provided for straightening castings that have become warped in annealing. The straightening should always be done cold if the casting will stand it, although if necessary it may be heated gently. Great care should, however, be taken if it is heated, as the strength is liable to be injured. The straightening may be done by means of suitable forms made of gray iron, or if the quantity warrants it, a drop hammer furnished with suitable dies may be used. It is often cheaper, when a bent piece is required in large quantities, to cast it flat and bend it afterwards on a form; this is frequently done in making brake-shoe keys, the levers for air-brake cocks, etc.

28. Inspection of Test Plugs.—In order to test the quality of the iron after it is annealed, test pieces, generally called **test plugs,** which are simply small projections, about $\frac{3}{4}$ in. $\times$ $\frac{1}{2}$ in. $\times$ 1 in. long, are cast on the more important work. Sometimes two or three of these are located in critical places. In railroad couplers especially, their constant use is important, as underannealed or overannealed or otherwise undesirable work can be thrown out. These test pieces are all removed in the chipping room, and the fracture is carefully inspected. The normal fracture should have a black velvety surface in the interior surrounded by a band of dark gray about $\frac{1}{16}$ inch thick, and this in turn is incased in a band of white not more than $\frac{1}{64}$ inch thick. If this band of white is thicker, it is an indication that the hard casting

is too low in silicon, commonly said to be too "high," the crystallization of the casting is too open, and the oxidation during the annealing process penetrates too deeply. If the band of white becomes $\frac{1}{8}$ inch thick, the castings will be found weak and no longer safe for very exacting service. As the white band becomes thick the gray band disappears. This gray band is the rim of crystals at right angles to the skin, regularly formed and therefore more open to the loss of carbon. The interior is also crystallized in the hard casting, but the crystals are mixed together in every conceivable way.

29. Fig. 20 illustrates the arrangement of the crystals. The interior of an annealed piece always has some white spots, which look like flakes, radiating from the center. These are sometimes shrinkage spots, but are more often planes of separation due to the high contraction found in the white casting. In Fig. 21 these planes of separation are illustrated in exaggerated form. Fig. 21 (*b*) shows a section through *a b*, Fig. 21 (*a*), in the center of which the white spots are shown. A shrinkage spot is always spongy; sometimes the whole casting is one mass of spongy material with only the skin sound, and yet has a tensile strength equal to the best malleable iron. Close investigation will always show some small openings in the skin communicating with the spongy interior, which allow almost a complete decarbonization of this material. The casting then becomes a spongy piece of wrought iron or steel that bends well but will not resist shock.

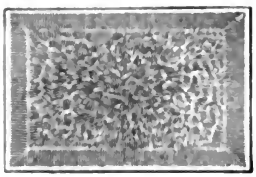

FIG. 20.

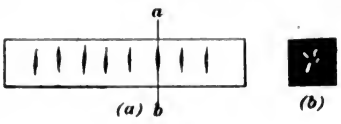

FIG. 21.

The introduction of steel into malleable mixtures changes the fracture considerably, the velvety black being changed to a granular dark gray structure showing a considerable

tearing apart of the crystals. Such a piece of malleable iron may be excellent.

A piece of malleable iron that shows a dull gray, often colored, and a banded structure, was nearly gray iron when it went into the annealing oven. This kind of metal is to be feared more than any other met with in the malleable-iron industry, as it is weak and worthless.

When the fractures are white, trouble may be experienced in locating the difficulty. If there are blowholes, the iron was low in silicon and burned in the furnace before it went to the annealing oven. Yet this iron if not too badly burned will be stronger than cast iron. If the structure resembles Fig. 20, the chances are that it is underannealed, and may be saved by returning it to the annealing oven. If, however, there are distinct flat crystals with shiny smooth faces, the iron was burned in the annealing oven and will remain worthless.

A casting is very often almost entirely white but has a black spot in the center; this is an indication of excessive annealing. If the white structure appears on one side only, the remainder being black, it is an indication that the iron is either very strong, or that too heavy a blow was struck in breaking off the test plug. Fig. 22 (*a*) shows a piece partially broken off, the blows being struck in the direction indicated by the arrow *a*. Breaking the piece off partially by repeated light blows, and then suddenly knocking it off will produce a white band, as shown in Fig. 22 (*b*), where the crystals did not have time to pull apart, but were suddenly snapped through in the middle. This often accounts for apparently bad test plugs when the iron is perfectly good.

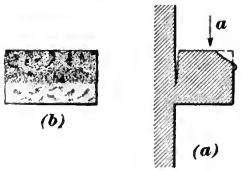

FIG. 22

It is always advisable to preserve samples of bad work in order to study the effects of certain conditions, and as the workman gathers these specimens, which were made with the greatest care, he will get an insight into the peculiar

nature of malleable iron that will be of very great value to him.

30. Inspection and Storage of Castings.—When the castings are finished they are finally inspected, either by the makers or by the buyer's representative. When the dimensions of the castings must lie within certain limits, they are usually tested, by means of gauges and templets, in the chipping room where any needed correction can immediately be made. The castings now go either directly to the warehouse, or are covered with a coat of asphalt dissolved in benzine. In railroad work especially, such a coating is desirable, as it keeps the material reasonably free from rust until used. Care must be taken in storing the benzine as well as in using it, as it is extremely inflammable. The coating is put on with brushes and dries very quickly.

The warehouse should be so arranged that a stock of castings may be stored for a reasonable length of time. Some concerns make it a rule to keep in stock about 1,000 castings of each kind that is in constant demand, in order to be able to fill all orders promptly.

31. Annealed Test Pieces.—In the annealing room good hard castings may be spoiled. The annealer therefore has cast for his own use and guidance special test wedges about 1 inch square, and of the form shown in Fig. 23, on which are cast identification marks of the various heats. Thus a test piece annealed in furnace No. 8, the second heat, the first part, and which was cast on August 16, is marked as shown in the illustration. These wedges are broken by the annealer to test their ductility. He then takes them to the superintendent's office, where they are arranged in cases properly dated. About 2 weeks' tests are generally kept on hand. An excellent guide whereby the working of the melting furnaces may be judged is thus furnished, defective iron being shown by a continued bad fracture.

FIG. 23.

SPECIAL ANNEALING EQUIPMENT.

32. Recent Developments in Annealing-Room Equipment.—Some of the most recent developments in annealing-oven construction present novel features. Instead of building the ovens above ground, and charging with trucks, they have in one instance been sunk below the floor level and the charging done with electric traveling cranes. There are no doors, the roofs of the ovens being removed in sections by the crane for the purpose of charging, and put on again in the same way when the charging is finished. The work of about 6 or 8 men is thus done by 1 man at the oven and a boy on the crane. The ovens are practically soaking pits; there is little loss of heat by radiation, there are very few buckstaves and tie-rods required, and the construction itself is very simple and inexpensive. No tiles need be used upon the floors, common No. 2 firebrick being sufficiently durable for this purpose, as there is no wear on them from a rolling truck. The flues in the bottom are arranged as in the ovens described, and the side walls are the same, but the end walls are carried higher to close up the ends of the

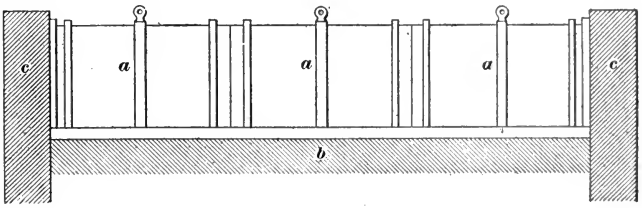

FIG. 24.

arched roof, as shown in Fig. 24, in which *a*, *a*, *a* are the sections of the roof, *b* the side walls, and *c*, *c* the end walls.

The roof, an end view of which is shown in Fig. 25, is the most important part of the oven construction. The sections consist of three deck beams *a*, Fig. 25, of a high type, bent in an arc of a circle and suitably connected together and attached to cast-iron heels *b*, *b*, so that a 9-inch brick arch, made of suitable arch brick, can be built within the structure

as shown. There are three of these sections in the roof; they are placed close together, and the spaces divided between the end section and the two end walls. The sections of the roof are made a little narrower than the space they are to occupy, thus making provision for expansion during the heating. The joints of the roof are all covered with fire-brick laid in mud, and as the ovens heat and expand, the joints must be watched and repaired, if necessary, to prevent

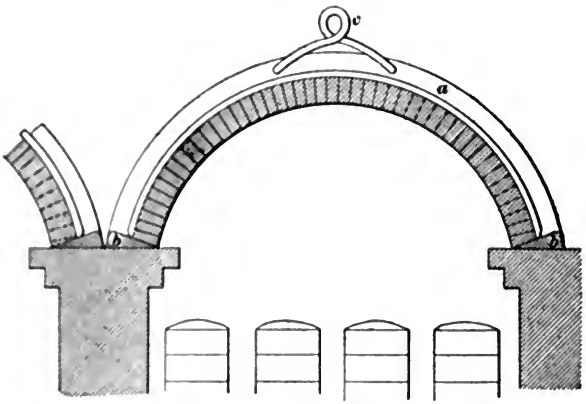

FIG. 25.

leakage. It will readily be seen that it is an easy matter to take the roof from one furnace while almost red hot and place it on another one that is just to be lighted. There is an appreciable saving made thereby in the time required for heating. When it is desired to move a section of the roof, the crane hook is simply caught into the eye *c* attached to the middle rail of the roof frame, and the section carried to the desired place. For the purpose of building and repairing these roof sections, a wooden form is kept in a suitable place, accessible to the crane, and the damaged sections placed on it for quick repair. Wells are provided on the outside of the oven large enough to permit a man to enter and control the dampers, and to make the temperature tests through the peep holes.

Forty of these ovens have been built in one set, two rows with twenty ovens in each being placed back to back. Two chimneys carry off the burned gases. Natural gas is used as a fuel, two sets of burners being placed above the pots and directly into the side walls, without fireboxes. The ovens have interior dimensions of 10 ft. × 20 ft. × 8 ft., being measured to the heel of the roof sections.

33. The traveling crane is kept in operation continually, day and night. The device used in lifting and carrying the pots by means of the traveling crane, called a *lifting frame*, is shown in Fig. 26. The crane hook is hooked in the eye *a*, and the two arms *b*, *b*, which are hinged at *c*, are lowered over the sides of the pot and under the projections on the ends of the stool. There are two of these, one with the distance between the arms a little greater than the length of the stool of the annealing pot and the other a little less. In charging an oven, the wider one is used, it being placed over the finished pot and the horizontal parts of the arms pushed toward each other until they catch securely under the edges of the stool and the pot lifted by means of the crane and carried over to the oven. The man in charge of the work in the meantime goes over to the oven to direct the lowering operation. When the pot is deposited in its proper place the lifting frame is lowered until the two arms are free to swing clear of the pot. The frame is then raised by means of the crane, and carried back for the next pot, taking the man with it. In discharging the oven, the other lifting frame is used. In dropping down over the pot, the arms must first be pushed apart a little. When they reach the bottom, they close automatically, catching the projecting lips of the stool, thus permitting the pot to be raised. It is understood, of course, that occasionally there will be some difficulty with a swelled or broken pot. In this case the lifting arms are taken off the cross-shaped frame *d* and chains substituted therefor. These are flexible

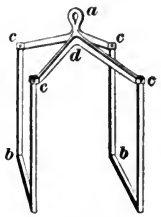

FIG. 26

enough to adjust themselves properly under the stool and enable the whole mass to be raised. When the pots are still hot, an iron rod with a suitable handle will be of great assistance in guiding the lifting frame over the pot.

MISCELLANEOUS PROCESSES AND EQUIPMENT.

34. Reheating and the Reheating Furnace.— Some malleable castings of thin section and complicated form develop such intense internal strains upon cooling that they are liable to crack, if allowed to cool in the usual way. Such castings should be shaken out of the sand as soon as possible after pouring, allowing the sand to stick to them to prevent rapid cooling while exposed to the air. They should then while still red hot be placed in a reheating furnace, whose interior has been raised to a red heat before the molten metal is tapped from the malleable furnace. The castings should be kept hot for 2 or 3 hours, after which the furnace is allowed to cool down very slowly; when sufficiently cooled the castings and loose sand may be removed.

The furnace used for this purpose is very simple, consisting usually of a firebox running along the side of a hearth, on which the castings are placed, both the hearth and firebox being slightly raised from the ground. The fuel used may be oil, gas, coke, or coal. Coal will, however, require a longer time to heat the furnace than the other fuels.

Fig. 27 (*a*) and (*b*) shows a furnace constructed for the purpose of burning coke or coal, in which *a* is the firebox, *b* the hearth on which the castings are placed, *c* a low bridge wall, *d* the grate, *e* the ash-pit, *f* the fire-door, *g* the charging door, and *h* the chimney flue. Fig. 27 (*b*) shows a section on the line *x y*, Fig. 27 (*a*). The grate *d* is placed sufficiently below the hearth to give the required depth of the fuel bed, the bridge wall *c* is made high enough to prevent the

castings from rolling into the fire, and the chimney flue *h* is raised somewhat above the level of the hearth to prevent the loose sand from choking up the flue. A damper should

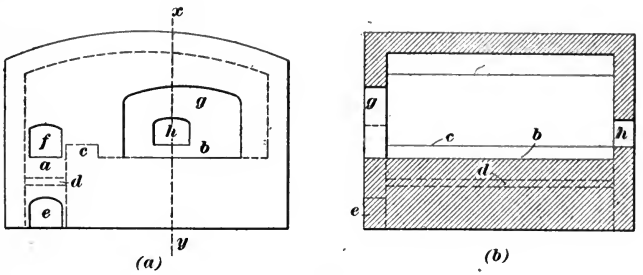

FIG. 27.

be used in the chimney flue, so that it may be closed in order to retain the heat in the furnace and allow it to cool very slowly.

This form of furnace is also sometimes used to heat castings that have become warped in the annealing process and cannot be straightened cold. Very great care must, however, be taken when this is done to prevent the temperature from becoming excessively high, as this tends to destroy the strength of annealed castings and renders them hard to machine.

35. Special Annealing Processes. — In one well-known foundry that makes malleable pipe fittings, the hard castings are simply thrown into the oven and annealed without any packing whatever. The temperature is kept high, but the process is necessarily short, as the castings heat up quickly and are of such a nature that they do not warp during the process. Subsequent rolling in a long inclined tumbling barrel produces a good finish. The process while good for this class of work is not to be recommended generally.

In another foundry the ovens and the pots are made large, and in order to obtain a quick penetration of the annealing heat, pieces of pipe, which extend through the stool and

cover, are inserted in the pots, thus creating a circulation of the hot gases not otherwise obtainable. This method is very desirable for large, flat castings of favorable design.

Another method of annealing is practiced in one of the large works of this country. The ovens are made very narrow and the castings packed in them in scale, without the use of pots. This method has its advantages and disadvantages. There is danger of imperfect heating and annealing, and when overheated the castings are liable to be warped out of shape. It should therefore be used only for heavy castings that are not liable to be warped in the annealing process. The capacity of the oven also is limited and the amount of fuel used excessive. On the other hand, the great expense of annealing pots is entirely avoided.

36. Firing.—In annealing as well as melting practice, the chimney is a good guide as to what is going on in the furnaces. It is a common error of melters and annealers to use too much fuel in the desire to get up a good heat. Instead of forcing the fires by using too much coal or gas, it is better to use less fuel, but burn it completely. When the smoke that leaves the chimney is darker than a light brown, it indicates that the combustion is incomplete and gas or coal is burned uselessly. The only exceptions to this rule are at the moment when the direction of air and gas is reversed in the open-hearth furnace, and in starting up of an annealing oven. The superintendent, foreman, melters, and heaters should constantly watch the chimneys for indications of incomplete combustion.

37. Galvanizing.—Certain classes of malleable castings, as pipe fittings, for instance, are frequently galvanized. This process reduces the strength of the iron considerably, and it should therefore be used only when the protection of the surface from corrosion is more important than the strength of the iron. The process of galvanizing malleable iron is the same as that used in galvanizing ordinary gray iron.

BRASS FOUNDING.

MAKING BRASS CASTINGS.

MOLD MAKING.

INTRODUCTION.

1. Iron and Brass Molds Compared.—The making of molds for **brass castings** is so similar in principle and practice to the making of molds for iron castings that he who understands making them for iron can readily learn to make them for brass; and, in some kinds of brass work, the iron molder may be more successful than the regular brass molder.

Molds for small brass castings are made on benches or over troughs, or on molding machines, while heavy castings are made on the floor, as is done with corresponding sizes of iron castings. The principal difference between molds for brass and for iron is that the brass-work molds are made from finer grades of sand. The lighter and finer the castings to be made, the finer must be the grade of sand used in the molds. If the sand is too coarse, the melted brass is sufficiently fluid to find its way into the openings among the grains, making the surface of the casting rough and pitted; hence, it is advisable to use the finest grade of sand that the character of the casting will permit. In addition to finer and cleaner sand, brass molding requires a greater allowance for contraction, different facings, parting sand, and finishings, and about the same blackening mixtures and methods of drying and ventilating as in iron molding.

For notice of copyright, see page immediately following the title page.

Bronze, fine art, statue founding, etc. is a specific trade in itself, and is not within the province of the brass molder, as outlined in this Section.

MATERIALS USED IN BRASS MOLDING.

2. Sand for Brass Work.—Where light castings are made only occasionally and are not a regular output of the shop, the molds for them may be made in the following manner: The coarser sand ordinarily used in iron molding is dried thoroughly and then sifted through a fine sieve, the portion that does not pass through being cast away. The portion that does pass through is then tempered, and used to face the mold by being sifted over the pattern; the remainder of the mold may be made from the sand ordinarily used.

It is important to have the molding sand as free from all foreign material as is possible, for anything that will coarsen the sand will tend to give a rough surface to the casting. Brass founders are very particular in this respect, and pieces of cores that may break off are carefully picked out of the molding sand; some founders even avoid the use of the regular parting sand, and use in its stead powdered rosin, or a mixture of rosin and charcoal, on the joints of the molds.

If the form of the casting is so intricate as to make it inadvisable to take the risk of the green sand supporting itself in the more delicate parts, or if the mold is so deep that the green sand will not support itself at the bottom, it may be necessary to use a dry-sand mold or a loam mold.

The sand mixtures for dry-sand or loam work should be close-grained, but of such a character as not to bake too hard, as this will cause the metal to boil when the mold is poured; besides, the metal will not stay in contact with the sides of the mold, so that a bad casting will result.

3. Blackenings and Partings for Brass Molds. The methods and mixtures used for blackening the surfaces of dry-sand and loam molds for iron may be used for brass

molding. In some cases skin drying is practiced for brass as well as for iron. The principal difference is that instead of using ordinary blackenings, and sleeking and printing the molds, as in iron work, other substances, such as flour, whiting, lime, water-lime cement, powdered chalk, and lycopode, are used. Plumbago is used for heavy brasses, especially those of red or whitish color, but is objectionable for yellow brass. Whichever one of these substances is used, it should be ground fine, so as to close up the pores of the sand as much as possible in order to prevent the metal cutting into the sand and giving a rough casting. For heavy work, flour is shaken out of a bag on the mold surface, and then plumbago thrown by hand or shaken out of a bag on top of the flour, after which the surface is sleeked with finishing tools similar to those used in finishing dry blackening on iron molds. Where the molds are liable to stand for more than 10 hours before being poured, flour is objectionable for the reason that it causes a vegetable growth on the face of the mold that may cause rough castings; it also causes the parts of the joint to stick together.

The joints in the molds are made by match boards, plates, sand odd-sides, or composition matches, as in the molds for iron; but great care must be used in the selection of a parting sand to find a material that will not coarsen the regular molding sand when mixed with it, since the ordinary parting sand will give trouble in this respect.

For a parting material at the joints, powdered rosin, or a mixture of powdered rosin and charcoal dust, is often used. A material lately introduced for this purpose, called **lycopode,** is said to work well, and besides makes a good facing for preventing the adhesion of the sand to the pattern. Much trouble is experienced at times by sand adhering to the surfaces of metal patterns, especially in damp or frosty weather, when the moisture in the air condenses on the metallic surfaces. The molders then say that the patterns are **sweating.** Some molders brush kerosene oil over the surfaces in order to prevent this adhesion, but this plan is not entirely satisfactory.

MAKING MOLDS FOR BRASS CASTINGS.

4. Mixing Facings for Molds.—In mixing facings for brass castings, sea coal or coke is not required, as is the case with iron castings. New molding sand that has been carefully screened and mixed to an even temper is generally used. This is applied to the face of the pattern through a fine sieve. In tempering, the same principles hold as with sand used for iron castings; the sand should be thoroughly mixed. The drier it is when placed in the mold, the better; since an excess of moisture will make steam, and thus cause scabs and blowing, in the same manner as occurs when pouring iron castings. The molds are rammed to about the same degree of firmness in both cases.

5. Venting Molds.—The methods of venting are, in general, the same for brass work as for iron, though the cope should be vented more freely in the former case, so as to allow an easy escape of the enclosed air and gases during the pouring, thus allowing the metal to run quickly and solidly into the corners. Small vent holes are often made entirely through the cope for this purpose.

6. Drying Molds.—Sometimes small molds are dried by burning gasoline on their surfaces; at other times they are covered with a red-hot plate until the heat gives the surface a hard, dry crust. Some molders dry the surface of a mold by holding it over a burning lamp, which also serves the purpose of smoking it. The same object may also be accomplished by holding the mold over a piece of burning rosin. The mold may be dried by placing a burning gas jet inside, and then covering it over with a plate. With some sands it is necessary to spray the surface with molasses water to obtain the necessary hardness on the surface.

7. Provision for Contraction.—The **contraction** that occurs in a brass casting during cooling exceeds that of an iron casting. Where the contraction in iron is $\frac{1}{8}$ inch to the foot, that in brass is $\frac{3}{16}$ inch; since the contraction is

fairly uniform, it may be provided for in making the pattern. If metal patterns for brass are to be made from wooden ones, the shrinkage allowance in the wood patterns should be double the usual allowance.

In dry-sand or loam molding, provision should be made for contraction while the casting is cooling. In many cases, if this provision is not made, the casting will break. This is especially likely to occur where the brass contains a large percentage of copper. If the core in a mold is made in such a way that the casting as it contracts in cooling cannot crush it, or if the core rods running from one side of the core to the other are too near the surface and will not give way, the casting is likely to break. In order to prevent this, the cores should always be made in such a manner that they will yield when the casting contracts; for this purpose they may be filled with cinders, or they may be made of some yielding material. This advice is applicable to both dry-sand molds and green-sand molds.

8. Gating and Feeding Molds.—Owing to the fact that brass, if it drops any considerable distance, will cut the sand in a mold, and thus cause lumps or scabs on a casting, it is usually better to *gate* a mold for a heavy casting as near the bottom as possible. If the casting is deep, it may have top-pouring gates in connection with the bottom gate.

With light castings, the danger of cutting the mold and of scabbing is not so serious; but the question of shaping the gates properly, and of so placing them that the casting will be full and sharp at the corners, is important. In order to aid the metal in filling the mold properly, the mold is often placed in an inclined position, with the pouring gate *a* at the top, as shown in Fig. 1.

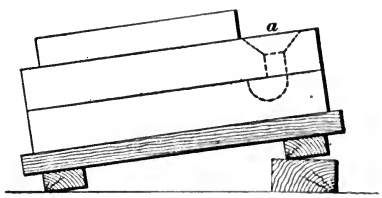

FIG. 1.

Where the castings are of a bulky character, provision is generally made to prevent shrinkage; for this purpose *feeders* are brought to the heavier parts. In constructing these feeders, it is better to connect them with the upper edge, as shown by the feeder *c*, Fig. 2, than to place them directly on the top face of the casting, as shown by the feeder *b*. After the mold has been poured, it should be fed occasionally from the crucible as long as the metal remains fluid. This is determined by the metal in the feeding heads rising when fresh metal is poured into the gates or feeding heads.

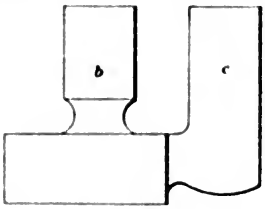

FIG. 2.

A wooden feeding rod may be used in pouring brass molds, instead of a metal rod, as used in iron molding. The wood should be thoroughly dried.

The feeders and their connections should be large enough to remain fluid as long as the casting does; this necessity exists as much in brass casting as in iron casting.

CLEANING BRASS CASTINGS.

9. Hand Work.—Usually the sand is removed from brass castings by means of wire brushes and files. The gates and feeders are removed by making cuts with hack saws and chisels to a depth sufficient to allow these parts to be broken off with a hammer. After the gates and feeders have been removed, any projections that they leave are cut off with chisels or files, or by grinding. When files are used, they must be cleaned occasionally with a file card. The sand blast, sprue, or gate-cutting machines, and several other labor saving devices are also employed for cleaning castings. There are in the market several forms of sprue-cutting or gate cutting machines, as well as power band saws for cutting off gates.

10. Tumbling barrels used for cleaning brass castings are made with wooden staves, to avoid breaking the corners of the castings, and also are often arranged to hold water. When being charged, the tumbling barrel should be nearly filled, so that the castings may not tumble about too much and thus bruise their corners; small scraps and floor shot should be packed in with the charge, as they assist in cleaning the castings.

11. Pickling.—Brass castings are **pickled** in nearly the same manner as iron castings. A *pickling liquor* that is sometimes used consists of 2 parts, by measure, of nitric acid and 3 parts of sulphuric acid, with a handful of table salt to each quart, no water being added. The pickle may be held in any suitable receptacle, such as a glazed earthenware crock, or a vitrified bathtub; it is necessary to provide a vessel large enough to hold the largest casting to be handled. The castings are simply dipped and removed at once and rinsed in clear water. This dip is merely for cleaning and brightening the castings. Various dips are used to produce different colors.

APPLIANCES FOR MELTING BRASS.

THE CRUCIBLE FURNACE.

12. Introduction.—The **furnaces** for brass melting may vary from a plain pipe stuck into the ground and supplied with a bottom grate and a stack to the most elaborate devices. Some brass founders use air furnaces, while others use cupola furnaces, but the **crucible furnace** is the most common. The plain cylinder furnace with a grate and stack that can be worked by natural draft, or, with the stack omitted, by forced draft, is also used. Some patent furnaces for which many advantages are claimed are also in use.

13. Location of Brass Furnace.—The furnace for melting brass is usually built in a corner of the shop, if it has only a single firebox; but if there are several furnaces built in a battery, they are placed alongside the wall where the flues can be connected with an outside chimney or stack. They may be arranged to have the ash-pit either inside or outside the shop walls. If the pit is on the inside, it is usually covered with grated plates and has the opening on a level with the floor surface, or it may be built above the floor level and have a grated front for the admission of air. In some brass foundries the furnaces are located in the center of the building, where they are easy of access.

14. Simple Brass Furnace.—The construction of a **simple furnace** for melting brass is shown in Fig. 3. It

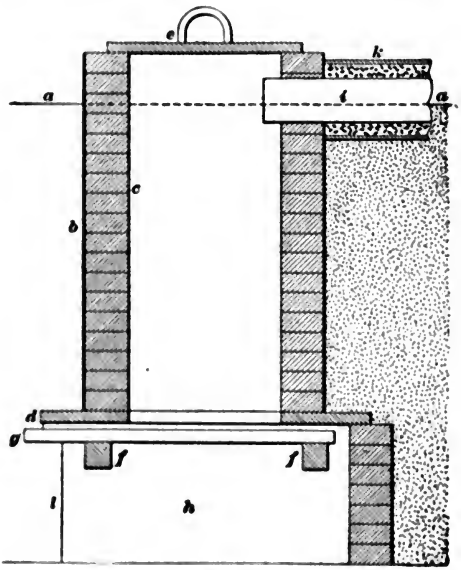

FIG. 3.

is built below the floor level *a* and consists of a sheet-iron shell *b* lined with firebricks *c*, resting on a bedplate *d*, and

fitted with a cast-iron cover *e*. The covers are usually provided with a refractory lining. Two bearing bars *f*, *f* support the loose grate bars *g*. The ash-pit *h* is usually from 12 to 18 inches deep. The products of combustion pass through a flue *i* near the floor line *a*.

The flue should have a diameter equal to about one-third that of the furnace and be connected to a chimney or flue that has an area at least as great as its own, and which is high enough to give a good draft. The height of the chimney will depend to a great extent on the surroundings. The flue *i* should be lined with firebrick or fireclay to protect the shell *k*; some founders use a cast-iron pipe, however, for a flue and renew it whenever it is burned away. The top of the furnace is generally made from 6 to 12 inches above the level of the floor line *a*. The inside diameter of the lining is generally made from 6 to 8 inches larger than the greatest diameter of the largest crucible that will be used. The furnace is usually made of such a height that the top of the crucible will be within 3 inches of the bottom of the flue *i* when there is about 9 inches of fuel under the crucible.

The grate bars *g* have a considerable influence on the character of the draft. They may be plain, straight, cast-iron, or wrought-iron bars; or the grate may be one circular casting. If made of separately cast bars, it is well to have lugs cast near their ends, to keep them at a uniform distance from one another, since this allows a uniform draft to pass through the fire, and gives better combustion in the furnace.

15. Brass Furnaces in a Battery.—Where more than one crucible furnace is required, and where they can be connected together, all the flues may lead to one main flue that connects with a chimney placed midway between the furnaces; for, if the chimney is at one end of the row, the furnace that is farthest away may suffer for lack of draft. The main flue should have an area equal to the combined area of the flues that form the branches. Where natural

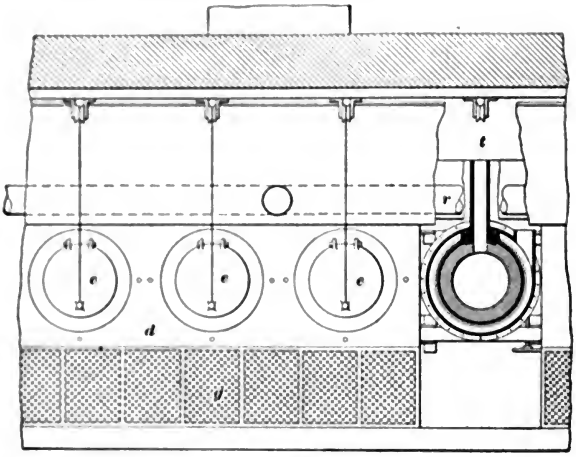

(a)

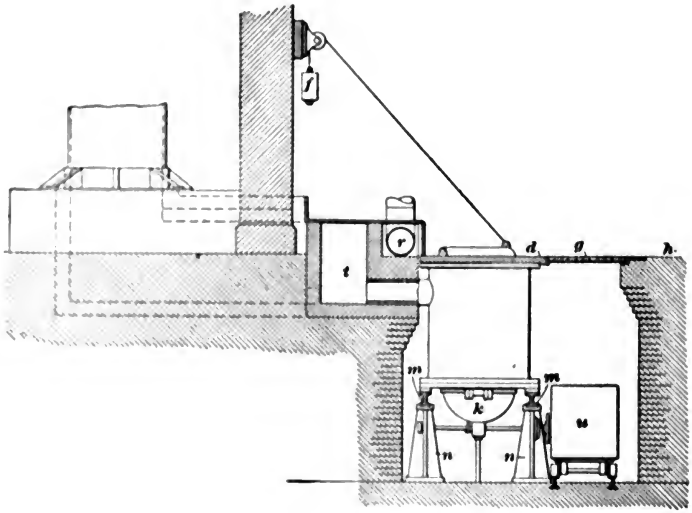

(b)

Fig. 4

draft is depended on, every care should be taken to have it as good as is possible under the existing conditions; for, if the draft is light, the speed of melting will be low and the quality of the metal poor.

An improved furnace that is used in the brass foundry of one of the largest railways in the United States is shown in Figs. 4 (*a*) and (*b*), and 5 (*a*) and (*b*). Fig. 4 (*b*) shows the end elevation, and (*a*) a plan with sections of a battery of four furnaces. The furnace consists of two cast-iron

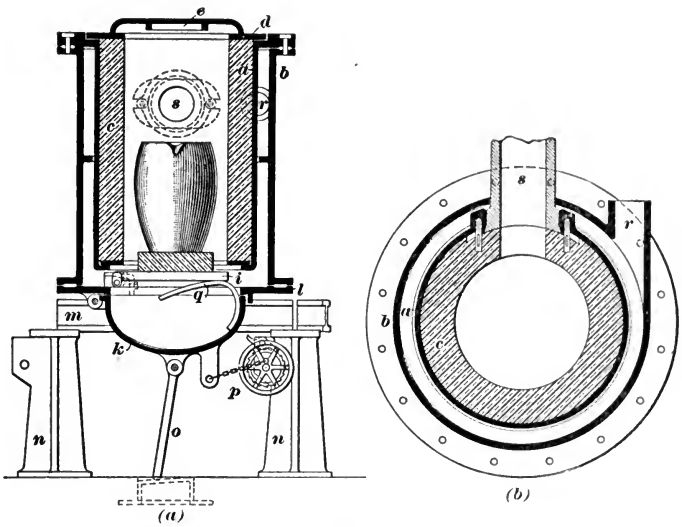

FIG. 5.

cylinders *a*, *b*, Fig. 5 (*a*) and (*b*), one within the other with an air space between. The inner one is lined with firebrick *c* and has a square top cover *d*, Fig. 4 (*a*), with a circular door *e*, which is counterbalanced by means of a chain and weight *f*, Fig. 4 (*b*). The covers *d* of the furnaces with the gratings *g* over the ash-pit make a continuous platform on the floor level *h*, as shown in Fig. 4 (*b*). A hinged grate *i* forms the bottom of the inner cylinder and a spherical door *k* hinged to the circular bottom casting *l* closes the bottom

of the outer one, as shown in Fig. 5 (*a*). The whole furnace is supported by **I** beams *m*, *m* on posts *n* resting on foundations below the level of the ash-pit floor, as shown in Fig. 4 (*b*). The lower door *k* is held securely in a closed position by a hinged prop *o* and is opened and closed by means of a chain wound on the shaft of a hand wheel *p*, and a ratchet and pawl, as shown in Fig. 5 (*a*). The bottom *k* is made bowl-shaped so as to serve as an ash receiver and also large enough to hold the metal if a crucible should break. A heavy curved piece of iron *q* fastened to the inside of the bowl lifts and holds the grate *i* in position. The blast from the blower enters at *r* and the burned gases pass through the upper opening *s* to the stack, as shown in Fig. 5 (*b*). The blast pipes *r* are laid along the escape flues *t*, Fig. 4 (*a*) and (*b*), and the air flows through the heated space between the cylinders *a*, *b*, as shown in Fig. 5 (*a*) and (*b*). This plan utilizes considerable waste heat and greatly reduces the time necessary to melt the charge. An ash-car *u* runs on tracks in the pit and is lifted from the pit by means of a pneumatic hoist operating on an overhead trolley; the hoist also serves to handle the crucibles, which are No. 80 in size and rest directly upon the grate *i*. In many cases chain hoists are used for handling the crucibles.

16. Increasing the Speed of Melting Brass.—It is at times desirable to increase the speed of melting in the regular crucible furnace. This may be done by inserting a blast pipe from a blower, under the grate, and closing the front of the ash-pit with a piece of sheet iron *l*, as shown in Fig. 3. Where 2 hours are required to melt the metal under natural draft, 1 hour will generally suffice with forced draft; but the forced draft is much harder on the crucibles, and, besides, requires constant attendance from the founder. Nevertheless, there may be times when the high speed of melting is desirable.

17. Combined Cupola and Crucible Furnace.—In Fig. 6 is shown a sectional view of a furnace arranged with

a sand bottom, so that the metal may be melted in direct contact with the fuel; or, by replacing the sand bottom with a grate, the metal may be melted in crucibles. When using this furnace without a grate for melting copper, it is necessary to have the blast much milder than when melting iron, and to use from one-eighth to one-fourth more fuel. In preparing the furnace, the daubing should be put on thinly and the surface should be blackened over, as in blackening a dry-sand core or dry-sand mold, for the cleaner the metal is kept in melting it, the better will be the results in casting. Only the copper should be melted in this cupola, and the tin and zinc for the mixture should be added to the copper after it has been tapped from the cupola; or the other components of the desired alloy may be in the ladle in a melted state when the copper is drawn from the cupola. Mixing the alloy while it is in direct contact with the fuel causes it to absorb sulphur from the fuel, and metallic oxides are formed, which, with the sulphur, may generate gases and so cause blowholes in the castings. Many founders who have tried to melt brass in a cupola have experienced this trouble.

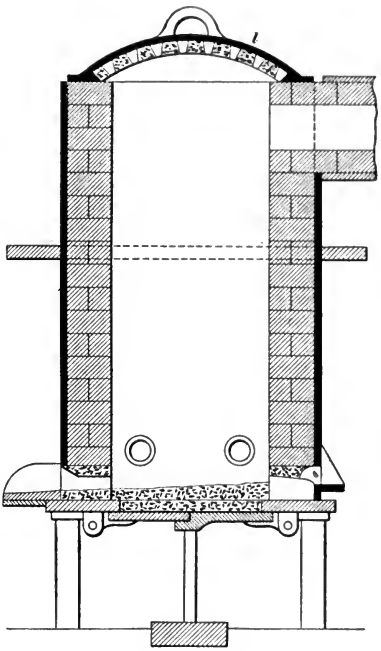

Fig. 6

When crucibles are used in the furnace shown in Fig. 6, they should be charged in the same manner as in the regular crucible furnace. They should be set in the cupola on a bed

of fuel ranging from 8 to 10 inches in depth; fuel should be placed around their sides and the blast applied, instead of using the natural draft.

18. Oil-Burning Brass Furnace.—While the crucible method is the most common one for melting brass, it is also melted in contact with the flame in furnaces that use crude petroleum for fuel. In Fig. 7 is shown one form of oil-burning furnace. It consists of a pear-shaped boiler-plate shell *a* mounted on trunnions *b*, *b'* supported by stand-

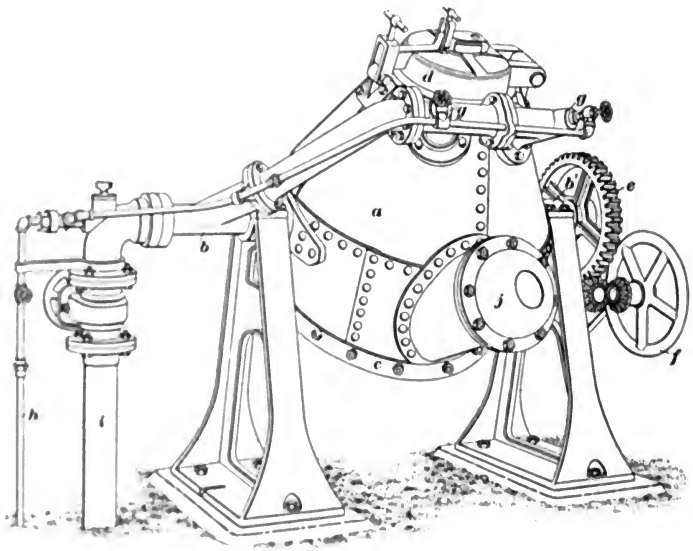

FIG. 7

ards on substantial foundations. The bottom *c* is removable for the purpose of lining the shell *a* with firebricks, making repairs, etc. After the bottom *c* is bolted in place, the materials for its lining are introduced through the hinged charging door *d* at the top of the furnace. The furnace is tilted and held in any desired position by means of a worm-wheel *e* on the trunnion *b'* and a worm and bevel gears

operated by a hand wheel *f*. The air and oil enter the furnace near the top through two tuyeres *g*, *g* placed at an angle to each other and pointing downwards. The oil pipe *h* and the air pipe *i* are connected to the movable parts on the furnace by means of stuffingboxes at the end of the trunnion *b*. The furnace is heated to its working temperature before the charge is put in. To aid in preventing excessive oxidation of the charge, it is necessary to cover it with some material to protect it; a small amount of fine anthracite coal is sometimes used for this purpose. When the charge is melted, it is emptied into ladles through the brick-lined spout *j*, which is also the only outlet for the products of combustion; the operation of the furnace is judged by observing the flame that issues from the spout. The advantages of this furnace are that a larger amount of metal can be melted in one bath than where crucibles are used, and a greater amount of metal can be melted in a given time per square foot of floor space occupied by the furnace.

CRUCIBLES FOR MELTING BRASS.

19. Care of Crucibles.—If the crucibles used in melting brass be handled carefully, they will last thirty or more heats; but if they are handled carelessly or ignorantly, they may be injured by crushing or cracking in one or two heats.

The first thing necessary to the life of a crucible is that it be annealed thoroughly for several days at a moderate heat, ranging about 220° F., such as the mild heat in core ovens. Crucibles are usually thoroughly annealed when being made, but in transportation from the maker to the user, they absorb moisture that must be slowly driven out or they will crack at the first heat.

In the case of large crucibles, it is well, after annealing them in an oven, to keep them mouth downwards over a slow fire for 6 or 8 hours.

A sufficient number of crucibles should be kept on hand, so that any of them that are partly glazed may be saved for

heavy heats or any especially hot firing that may be on hand.

A crucible used where the melting is done in from 1¼ hours to 1¾ hours, under forced draft, cannot last as long as one where from 2 to 4 hours are taken in the melting. The character of fuel used may also have much to do with the life of a crucible. If the draft or damper is regulated in such a manner as to produce an oxidizing instead of a reducing flame, the effect will prove injurious to the life of the crucible.

The kinds of metals melted also are important factors. A crucible that will last only three heats when melting nickel may last six heats with steel, twenty-five heats with copper, and possibly the same pot may be used forty times when melting the soft compositions.

In charging furnaces, the metal should not be jammed into the crucible, as this will strain the pot and cause slight cracks. In using the tongs, they should be made to fit the crucible closely, since if they do not fit, they will strain the parts with which they are in contact.

After pouring the metal out of the crucible, care should be taken to see that none remains in the bottom, as it will adhere to the bottom and tear it when it has cooled, or while being removed when the crucible is being prepared for the next heat.

When the heat is finished, the crucible should be stored away in some warm, dry place until the next heat; and if this interval lasts more than a few days, it should be put in the core oven and heated before being used again.

In ordering crucibles, it is well to inform the manufacturer of the kind of metal for which it will be used; this will enable him to select a mixture for the crucible that will be suitable for the intended work.

20. Capacities of Crucibles.—Table I gives the diameter of crucibles and the pounds of metal they will hold, as well as the numbers by which they are sold by dealers.

TABLE I.

SIZE AND CAPACITY OF CRUCIBLES.

Number of Crucible.	Outside Height. Inches.	Greatest Outside Diameter. Inches.	Capacity in Melted Metal. Pounds.
1	$3\frac{1}{2}$	3	3
2	4	$3\frac{1}{4}$	6
3	$4\frac{5}{8}$	$3\frac{3}{4}$	9
4	$5\frac{1}{8}$	$4\frac{1}{4}$	12
5	6	$4\frac{5}{8}$	15
6	$6\frac{1}{2}$	$5\frac{1}{8}$	18
8	$7\frac{1}{4}$	$5\frac{7}{8}$	24
10	$8\frac{1}{4}$	$6\frac{1}{4}$	30
12	$8\frac{5}{8}$	$6\frac{1}{2}$	36
14	$9\frac{1}{8}$	$7\frac{1}{4}$	42
16	$9\frac{5}{8}$	$7\frac{3}{4}$	48
18	10	$8\frac{1}{8}$	54
20	$10\frac{5}{8}$	$8\frac{5}{8}$	60
25	$11\frac{1}{8}$	9	75
30	$11\frac{3}{4}$	$9\frac{3}{8}$	90
35	$12\frac{1}{4}$	$9\frac{3}{4}$	105
40	$12\frac{5}{8}$	$9\frac{7}{8}$	120
45	13	$10\frac{1}{2}$	135
50	$13\frac{3}{4}$	$10\frac{3}{4}$	150
60	$14\frac{1}{8}$	$11\frac{1}{4}$	180
70	$14\frac{3}{4}$	$11\frac{3}{4}$	210
80	$15\frac{1}{2}$	$12\frac{1}{2}$	240
100	$16\frac{1}{8}$	13	300

MELTING COPPER AND OLD BRASS.

21. Operating the Brass Furnace.—Before placing the crucible in the furnace, the fire should be well under way; there should be sufficient fuel in the furnace to form

a solid bed from 8 to 10 inches thick between the grate and the crucible, which should be charged with the metal before it is placed on the bed of burning fuel. The crucible is packed closely, and is filled to the top, the metal being allowed to protrude from the top, if it is known that when melted it will not quite fill the crucible. The crucible tongs, one form of which is shown in Fig. 8, are then placed over the crucible, and are held in place by means of the link *a*. The crucible is then lifted and lowered into the furnace by the tongs and set evenly on the bed of fuel. The tongs are now removed, and fuel, broken to a medium size, is shoveled into the furnace to fill the space between the crucible and the sides of the furnace, the fuel being filled in to the level of the top of the crucible.

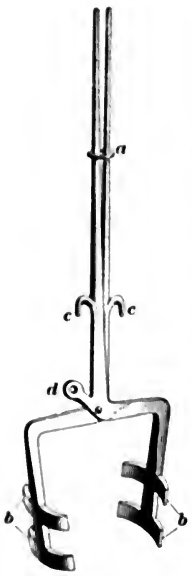

FIG. 8.

22. Adjusting the Crucible.—As the fuel burns away, the crucible will settle gradually toward the grate, and to prevent its settling too low, so that there will not be a sufficient body of fire under it, it is raised occasionally by means of the crucible tongs to its original position. When the crucible is raised, the fuel from the sides settles down under it, and the crucible is readjusted on the bed; the crucible tongs are then removed and fresh fuel added to replace that which has settled under the crucible. The cover *l*, Figs. 3 and 6, is put in place in order to continue the draft and keep the heat in the furnace.

In some cases the crucible may need adjusting in this way two or three times before the metal will be hot enough to be poured into the molds. As the furnace cools somewhat every time it is opened for the admission of fresh fuel, the fire should be so arranged that it will not need fuel just before the metal is poured, for renewing it at that time will

cause a setback by cooling the metal. Usually the crucible will take more metal when the first charge melts and settles, in which case the additional metal is gently added by means

FIG. 9.

of the tongs shown in Fig. 9. This method of melting brings the whole potful to the melting temperature in a uniform manner.

The metal should not be left in the furnace longer than is necessary to give it the degree of fluidity necessary to pour it, for if the temperature is increased beyond this point, it will cause injury to the metal and may cause blowholes in the castings, especially if the metal has a large percentage of copper. The proper temperature can be determined only by watching the alloy closely during the melting. If, when a rod is inserted into the molten metal, no metal adheres when it is withdrawn, the metal is at least warm enough to be poured. If it is held in the fire longer, it will be injured by absorbing oxygen from the air. If old brass is used, some of the zinc will oxidize, or burn out; this loss must be replaced by new material.

FIG. 10.

23. Handling the Crucible and Metal.—When taking the crucible out of the furnace with the tongs, care must be taken that the jaws *b*, *b*, Figs. 8 and 10, of the tongs are below the largest part of the crucible, as is shown in Fig. 10, for if they are not, the pot may slip out of the tongs before it reaches the top of the furnace or as it is being carried around the floor, thus spilling and losing the metal and endangering the workmen. When the tongs clasp the pot, a link *a*, Fig. 8, is slid along the handles, as shown, and made

to press them tightly together; the pot can then be lifted out of the furnace. If the pot is too heavy for one man to handle, it is lifted by two or more men taking hold of the handles and lifting it to the top of the furnace. When the crucible is very heavy, a chain hoist is used, hooking it on one of the hooks *c*, or attaching it to the eye *d*, Fig. 8.

Sometimes the hoists are suspended from overhead rails or trolleyways that permit of the crucible being carried from the furnace to the mold while it is suspended in the

FIG. 11.

lifting tongs; or it may be lowered into a ladle shank *a*, as shown in Fig. 11. In pouring by the use of these shanks, an extra helper is required to hold the crucible in the shank.

24. Oxidation in Melting Brass.—As the melting proceeds in the furnace, care should be taken to keep the top of the molten metal from contact with the air as much as possible. This is done by covering the metal with powdered charcoal, glass, or some other fine, dry dust. Copper, especially, has an affinity for oxygen, and care must be taken to prevent its absorbing oxygen from the air, since this affects the strength and homogeneity of the castings to such an extent that when they are broken oxide spots will be found in addition to blowholes. To prevent this as much as possible, many founders will not remove the covering of charcoal, or whatever covering may be used, from the surface of the metal until the last moment before pouring, and may even leave it on during the pouring, holding it back with a skimmer.

The evil of **oxidation** is so serious with nearly pure copper and some kinds of bronze castings that the scheme of using secondary ladles that permit bottom pouring is sometimes used. These secondary ladles have a hole through the bottom that is from 1 inch to 1¼ inches in diameter, according to the speed of pouring desired. The hole is stopped with an iron plug that is coated with clay or graphite, and which is so arranged that it can be pulled out when desired, thus permitting the flow of the metal through the bottom of the ladle. This bottom hole should be connected as closely as possible with the pouring gate of the mold, for if this is not done, the metal may be sufficiently exposed to the air in its passage to the gate to absorb as much oxygen as though no secondary pot had been used. Even with such a device closely connected to the pouring gate, it is impossible to prevent copper and some bronzes from absorbing some oxygen from the air in the mold. While it is true that this device does not wholly prevent the absorption of oxygen, there are times when its use will produce results that will justify its adoption.

25. Precautions in Melting Brass.—The best fuels for melting copper are charcoal and coke, the former being given the preference when the best results are desired. In melting the copper, care should be taken not to raise the temperature any higher than is necessary; this may be determined by the metals with which it is alloyed, or it may be determined by running the molten metal into the thin portions and corners of the castings. The higher the temperature is raised when melting, the more oxide and gases will be formed; if the temperature be great enough to obtain a white, or boiling, heat, it may be impossible to produce sound castings, and, in addition, the castings will be very brittle. When molten copper has been overheated, it may be brought again to a proper condition by adding tin or phosphorus to it. The greater the amount of phosphorus or tin that is added, the more sound are the castings likely to be.

26. Buying Copper.—Copper, like pig iron, should be bought on analysis, so that its constituents may be known to the desired degree of accuracy. It can be purchased on a guarantee that it contains 99.6 per cent. pure copper and is entirely free from sulphur. If it comes in ingot form, the manufacturer's name should be cast on each ingot. The ingot should have a concave face on the side that was cast uppermost, as this shows the amount of shrinkage likely to occur from its use. In obtaining an analysis of a shipment of copper, drillings are taken from ingots selected from equal divisions of the shipment, after the manner used in obtaining analyses of iron.

DEOXIDIZING METALS.

27. Silicon.—It is beneficial to both the strength and homogeneity of copper, brass, and bronze castings to remove as much of the oxides or occluded gases arising from the absorption of oxygen as is possible. For this purpose an alloy of copper that contains from 3 to 5 parts of silicon and from 90 to 95 parts of copper is often used. The usefulness of this mixture is due to the oxygen having a greater affinity for the silicon than for the copper; hence the oxygen in the metal unites with the silicon and forms a silicate that rises to the surface and can be skimmed off. The addition of from 1 pound to 1½ pounds of this alloy to 100 pounds of copper is said to produce sound copper castings; if this is not done, the founder may often experience much trouble from blowholes, which are due to the occluded gases.

In adding silicon care must be taken to add it in such small quantities that none will be left after the oxides are fluxed off. When added to the molten metal, the mass should be well stirred with a rod in order to bring as much as possible of the copper in contact with the flux. This is practically a refining process.

28. Stirring the Copper.—One method for deoxidizing melted copper is to stir the copper slowly and steadily

with a stick of unseasoned hard wood, from 1½ to 2 inches thick, until a sample of the copper will show, on cooling, a small shrink hole of a brownish color in its center; the stirring is then continued (taking care not to allow the temperature of the metal to rise) for a few minutes until a sample taken will cool with a level surface, without showing either any shrink hole or any elevation in the center; the metal is then ready to be poured. Should the stirring be continued much longer, the metal will revert to its former condition because of the occluded gases. While the metal is being stirred, it should be kept covered with powdered charcoal, or some other means, to keep it from contact with the air. This plan has resulted in obtaining solid castings from pure copper.

29. Phosphorus is also introduced into the metal as a deoxidizing agent; it is beneficial, since the oxygen will combine with it and pass off as an oxide of phosphorus in the form of a yellowish-white smoke. Phosphorus may be obtained from druggists in the form of sticks about the size of a finger, which weigh about 2 ounces each. A half dozen or more are put up in a can or bottle that is then filled with water and sealed or stoppered, since the phosphorus will ignite at 111° F. and will take fire of its own accord if left exposed to the air.

As the phosphorus will take fire in a few seconds in the hand, if it were removed from the water in that way, thus causing a painful burn, means must be provided for immersing it in the molten metal. One way to accomplish this is to insert the phosphorus in a tube made of clay or graphite, having a ⅝-inch hole extending through it. This tube is attached to the end of a metal rod, and the sticks of phosphorus are held in the tube by means of some strips of tin or copper that are fastened over the end. The tube is immersed in the molten metal and held there until the phosphorus is absorbed.

Another plan is to use an iron receptacle *a*, shown in Fig. 12, with a handle *b*. Several sticks of phosphorus are

inserted into the chamber *c*, and kept there until they are dry and show signs of catching fire, after which the holder is tilted gently and lowered into the molten metal, where it is held until the phosphorus has been absorbed.

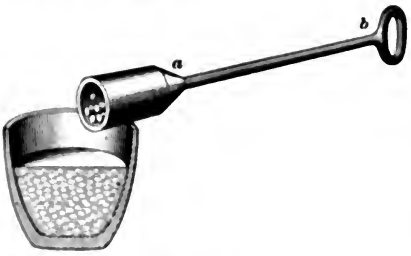

FIG. 12.

In order that the phosphorus may be safely handled and inserted in the molten metal, some founders prepare it by placing the sticks in a dilute solution of sulphate of copper for about 30 minutes. This deposits a coating of copper on the sticks, when they may be safely handled as long as this coating is sound. The sulphate-of-copper solution may be held in a stone jar, and when the sticks are taken out they may be placed on blotting paper that rests on wire netting, the netting being supported in a pan that is about 6 inches deep and contains about 2 inches of water. The pan should be provided with an air-tight cover, to be used in case the phosphorus should take fire. See Fig. 13.

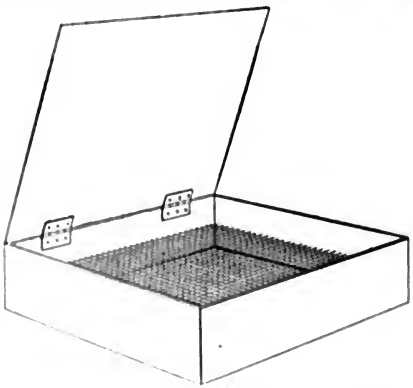

FIG. 13.

By handling phosphorus quickly with the hands, and introducing it into the metal with a shovel or a pair of tongs, it may be added without using the iron receptacle shown in Fig. 12. But if added in this way, much of the phosphorus will be oxidized and lost.

30. **Aluminum** in a pure state alloyed with copper in the proportions of from one-sixth to one-tenth is used as a

deoxidizing agent. It makes a good deoxidizing agent and greatly increases the strength of the castings, but has the disadvantage of increasing the shrinkage to such an extent as to make it almost impossible to get solid castings when the metal contains 10 to 11 per cent. of aluminum. Aluminum has an additional disadvantage in that it oxidizes when in contact with the air, forming a thin film of aluminum oxide on the surface of the molten metal, which may spoil the casting if permitted to pass into the mold. This film forms so rapidly that it can be seen forming on a clean stream of the molten metal as soon as it leaves the lip of the crucible.

Aluminum alloys with zinc, and when the mixture of copper, zinc, and aluminum contains 3 per cent. or less of aluminum, strong brass castings can be made from it. It is difficult to obtain solid castings when the aluminum is over 3 per cent.

When a small amount of aluminum is found to give good results in brass castings, a good way to introduce it into the copper is in the form of aluminum zinc, which contains 90 parts zinc and 10 parts aluminum.

ALLOYS AND MIXTURES.

COPPER AND TIN ALLOYS.

31. Effects of Alloying Copper With Tin.—Copper and tin have a great affinity for each other, and mix thoroughly in nearly all proportions. Tin is a soft, white metal and melts at about 440° F.; but, while both tin and copper are soft metals, their alloys are harder than the metals themselves. One part of tin will combine with 2 parts of copper in so homogeneous a manner that each metal will lose its identity, giving a compound that is gray in color and very hard and brittle. Tin greatly increases the fluidity of molten copper; the tensile strength of copper increases by the addition of tin from 1 to 12 per cent.; the

ductility of copper is decreased by the addition of tin; the ability of copper to resist crushing increases up to the addition of 18 per cent. of tin, but beyond this percentage of tin the alloy becomes hard and brittle.

32. Gun Metal.—Alloys containing from 1 to 7 per cent. of tin turn a beautiful brown color when finished. The alloy known as **gun metal** consists of copper and from 8 per cent. of tin in the soft grades to 20 per cent. in the hard grades. Gun metal is so greatly weakened by heat that the tensile strength at 500° F. is less than two-thirds that at ordinary atmospheric temperatures. The best gun metal has from 8 to 10 per cent. of tin alloyed with the copper.

Tin is supplied to the trade in pig or bar form, and is added to the copper by melting each metal separately or by adding the tin while the copper is in the furnace or after the crucible has been lifted from the furnace. There are two grades of tin, one called *grain tin* and the other *block tin;* the former, being the purer metal, is used in producing the best grades of bronze.

Some founders, using tin in the pig or block form, add it to the molten copper by holding the end of the block in the molten metal until a sufficient amount has melted off, the pig having previously been marked at the place that will give the proper weight. Others cut off pieces and immerse them separately. Some first melt the tin and cast it into small slabs or rolls of convenient size. When the tin is bought in the bar form, it is handled much more easily than otherwise.

When melting tin in a crucible, it must be watched, and removed from the fire as soon as it is melted; otherwise, the fumes, if exposed to the air, will catch fire and burn with a bright, white light.

After tin has been added to melted copper, the mass should be thoroughly stirred. This may be done with a rod made of plumbago or an iron rod heavily coated with graphite. The rod should be used around the sides and bottom of the crucible as well as at the middle, so as to thoroughly agitate the whole mass.

TABLE II.

SHOWING THE CHEMICAL AND PHYSICAL PROPERTIES OF THE ALLOYS OF COPPER AND TIN.

Chemical Constitution.	Composition by Weight. Per Cent. Copper.	Composition by Weight. Per Cent. Tin.	Specific Gravity.	Color.	Fracture.	Ultimate Cohesion Per Sq. In. Tons.	Order of Ductility.	Order of Malleability at 60° F.	Order of Hardness.	Order of Fusibility.	Characteristic Properties in Working, Etc.	Relation to Cast Iron in Presence of a Solvent, i. e., Sea-Water.
$C+$	100.00		8.667	Tile red,	$E.$	24.6	1	2	10	16	Well known.	Every alloy of $C+T$ increases the corrosive action of sea-water on cast iron in their presence. The maximum increase is due to tin.
$10C+T$	84.29	15.71	8.561	Reddish yellow, 1	$F.C.$	16.1	2	6	8	15	Gun metal, etc.	
$9C+T$	82.81	17.19	8.162	Reddish yellow, 2	$F.C.$	15.2	3	7	5	14	Gun metal, etc.	
$8C+T$	81.10	18.90	8.459	Yellowish red, 2	$F.C.$	17.7	4	10	4	13	Gun metal and bronze.	
$7C+T$	78.97	21.03	8.728	Yellowish red, 1	$V.C.$	13.6	5	11	3	12	Hard mill brasses, etc.	
$6C+T$	72.27	27.73	8.750	Bluish red, 1	$V.$	9.7	0	12	2	11	Brittle } All these alloys	
$5C+T$	72.80	27.20	8.575	Bluish red, 2	$C.$	4.9	0	13	1	10	Brittle } found occasion-	
$4C+T$	68.21	31.79	8.400	Ash gray,	$C.$	.7	0	14	6	9	Crumbles } ally in bells with	
$3C+T$	61.69	38.31	8.539	Dark gray,	$T.C.$	.5	0	16	7	8	Crumbles } mixtures of zinc	
$2C+T$	51.75	48.25	8.416	Grayish white, 1	$V.C.$	1.7	0	15	9	7	Brittle } and lead.	
$C+T$	34.92	65.08	8.056	Whiter still, 2	$T.C.$	1.4	0	9	11	6	Small bells, brittle.	
$C+2T$	21.15	78.85	7.387	Whiter still, 3	$C.C.$	3.9	0	8	12	5	Small bells, brittle.	
$C+3T$	15.17	84.83	7.447	Whiter still, 4	$C.C.$	3.1	0	5	13	4	Speculum metal of authors.	
$C+4T$	11.82	88.18	7.472	Whiter still, 5	$C.C.$	3.1	8	4	14	3	Speculum files, tough.	
$C+5T$	9.68	90.32	7.442	Whiter still, 6	$E.$	2.5	6	3	15	2	Speculum files, soft and tough.	
$+T$		100.00	7.291	White, 7	$F.$	2.7	7	1	16	1	Well known.	

Abbreviations used in the fifth column to denote character of fracture: *F. C.*, Fine Crystalline; *C. C.*, Coarse Crystalline; *T. C.*, Tabular Crystalline; *F. F.*, Fine Fibrous; *C.*, Conchoidal; *V. C.*, Vitrio Conchoidal; *V.*, Vitreous; *E.*, Earthy.

The maxima of ductility, malleability, hardness, and fusibility are 1.

The numbers in the fourth column denote intensity of shade of same color.

The ultimate cohesion was determined on prisms of .25 inch square without having been hammered or compressed after being cast. The weights given are those that each prism just sustained for a few seconds before disruption.

The copper used in these alloys was granulated and of the finest "tough pitch." The zinc was Mosselman's from Belgium and the tin "grain tin" from Cornwall. They were alloyed in a peculiar apparatus to avoid loss by oxidation and the resulting alloy verified by analyses.

No simple binary alloy of copper and zinc, or of copper and tin, works as well in turning, planing, and filing as if combined with a very small proportion of a third fusible metal—generally lead is added to $C+Z$, and zinc to $C+T$, as is known to workers in metals.

33. Chemical and Physical Properties of the Alloys of Copper and Tin.—Table II gives the composition and physical properties of a number of alloys of copper and tin. The metals were alloyed in proportion according to their atomic weights, as shown in the first column, and hence the percentages in column 2 are not expressed in even figures.

COPPER AND ZINC ALLOYS.

34. Zinc is a bluish-white metal that possesses little strength. It will take fire in the air if heated above 750° F., and in burning emits a greenish-white flame and fumes that form oxide of zinc. It may be mixed with copper up to 35 or 40 per cent. without having much effect upon the malleability and ductility of the alloy, but further additions of zinc cause the mixture to become brittle; for instance, an alloy containing 2 parts of zinc to 1 part of copper is so brittle that it may be readily crushed in a mortar.

35. Brass and Bronze.—When zinc is alloyed with copper without other metals, it gives the mixture called **brass**; while tin alloyed with copper, gives **bronze.** When the mixture is composed of 66 parts copper and 34 parts zinc, we have the alloy commonly used for brass castings; although, from 2 to 4 per cent. of tin is often added, as it gives greater strength to the castings.

Zinc gives fluidity to the alloys and is an excellent deoxidizing agent for the copper, assisting in obtaining sound castings. When a high percentage is used, however, to give extra fluidity to brass that is to be used in making thin castings, care must be taken that the metal is not poured when it is too hot, else it may boil or **kick** out of the mold.

In making brass castings, a good color is one of the features desired. A mixture that gives good results for this purpose consists of 16 parts of copper and from $\frac{3}{4}$ to 1 part each of tin, zinc, and lead. If this mixture is poured into molds made from a fine grade of sand, very fine light castings having a good color may be obtained.

TABLE III.

SHOWING THE CHEMICAL AND PHYSICAL PROPERTIES OF THE ALLOYS OF COPPER AND ZINC.

Chemical Constitution.	Composition by Weight Per Cent. Copper.	Zinc.	Specific Gravity.	Color.	Fracture.	Ultimate Cohesion Per Sq. In. Tons.	Order of Ductility.	Order of Malleability at 60° F.	Order of Hardness.	Order of Fusibility.	Characteristic Properties in Working, Etc.	Relation to Cast Iron in Presence of Solution, i. e., Sea-Water.
$C+$	100.00		8.667	Tile red,	*E.*	24.60	8	1	12	15	Well known	All these alloys increase the corrosion of cast iron in sea-water when in their presence.
$10C+Z$	90.70	9.30	8.605	Reddish yellow, 1	*C. C.*	12.21	6	13	21	14	Several of these are malleable at high temperatures.	
$9C+Z$	89.80	10.20	8.607	Reddish yellow, 2	*F. C.*	11.50	4	11	20	13		
$8C+Z$	88.70	11.30	8.633	Reddish yellow, 3	*F. C.*	12.80	2	10	19	12	Similar, etc.	
$7C+Z$	87.70	12.30	8.587	Reddish yellow, 4	*F. C.*	13.20	9	9	18	11		
$6C+Z$	85.08	14.92	8.591	Yellowish red, 3	*F. F.*	14.10	5	8	17	10		
$5C+Z$	83.02	16.98	8.415	Yellowish red, 2	*F. C.*	13.70	11	2	16	9	Bath metal	
$4C+Z$	79.65	20.35	8.448	Yellowish red, 1	*F. C.*	14.70	7	3	15	8	Dutch metal.	
$3C+Z$	74.58	25.42	8.397	Pale yellow,	*F. C.*	13.10	10	4	14	7	Roll sheet brass.	
$2C+Z$	66.18	33.82	8.299	Full yellow, 1	*F. C.*	12.50	3	6	13	6	British brass.	
$C+Z$	49.47	50.53	8.230	Full yellow, 2	*C. C.*	9.20	12	5	12	6	German brass.	
$C+2Z$	32.85	67.15	8.283	Deep yellow,	*C. C.*	19.30	1	7	10	6	Brass, watchmakers'.	
$8C+17Z$	31.52	68.48	7.721	Silver white, 1	*C.*	2.10		22	5	5	Very brittle	All these alloys decrease the corrosion of cast iron in sea-water when in their presence.
$8C+18Z$	30.30	69.70	7.836	Silver white, 2	*V. C.*	2.20		23	6	5	Very brittle	
$8C+19Z$	29.17	70.83	8.019	Silver gray, 3	*C.*	.70		21	7	5	Very brittle	
$8C+20Z$	28.12	71.88	7.603	Ash gray, 3	*V.*	.20		19	3	5	Brittle	
$8C+21Z$	27.04	72.96	8.058	Silver gray, 2	*C.*	.90		18	9	5	Brittle	
$8C+22Z$	26.24	73.76	7.882	Silver gray, 1	*C.*	.80		20	8	5	Very brittle	
$8C+23Z$	25.39	74.61	7.443	Ash gray, 4	*F. C.*	5.90		15	1	5	Too hard to file or turn, luster nearly equal to specular metal.	
$C+3Z$	24.50	75.50	7.449	Ash gray, 1	*F. C.*	3.10		16	2	4	Barely malleable.	
$C+4Z$	19.65	80.35	7.371	Ash gray, 2	*F. C.*	1.90		14	4	3	Brittle.	
$C+5Z$	16.31	83.69	6.605	Very dark gray,	*F. C.*	1.80		17	11	2	White button metal.	
Z		100.00	6.895	Bluish gray,	*T. C.*	15.20	13	12	23	1	Brittle.	
											Brittle, well known.	

36. Alloying Copper With Zinc.— In adding zinc to copper, it may, when added in small quantities, be inserted in the molten copper by means of a pair of tongs, when it will be thoroughly melted by the heat of the copper; in the case of adding a large quantity, it should be melted along with the copper, by being charged into the crucible as soon as the copper commences to melt. It may also be melted separately and poured into the copper through a hole made for the purpose through the charcoal covering over the copper or through a hole in an iron cover; such a cover is the best thing to use to prevent oxidation. If the metal is not kept covered, the zinc will volatilize rapidly, causing a vapor that, in burning, creates an oxide that settles around the shop in the form of flakes. Where tin is added to the copper, it is put in immediately after the zinc.

As zinc costs but from one-fourth to one-third as much as copper or tin, it is used in commercial work whenever the castings made from it will answer the purpose.

Table III gives the composition and the physical properties of alloys of copper and zinc.

LEAD AND COPPER ALLOYS.

37. Lead.—The specific gravity of **lead** is 11.35, and it melts at 612° F. The addition of lead to brass or bronze castings decreases their strength and changes their color, and also makes them corrode more easily. Lead and copper have little affinity for each other, and will only mix in a satisfactory manner when the lead does not exceed about 3 per cent. It will scarcely combine with zinc, and a combination of them is only made by adding a small percentage of arsenic. However, lead will assist in giving the castings a smooth surface, as it forms an oxide of lead on the surface that prevents the molten metal taking too sharply the impression of the sand. A small amount of lead is added to brass castings to facilitate the work to be done on them in the machine shop.

Lead is used a great deal in the manufacture of *Babbitt metal*, which is used in the construction of bearings for the journals of shafts and spindles; some castings of this character contain as much as 10 per cent. of it in mixture with copper and tin, no zinc being used. It is added to the copper in the same manner as zinc or tin. As it is much cheaper than copper, zinc, or tin, it is used as much as possible by some founders. An excess of it is readily detected by the color and the lack of homogeneity shown when the casting is broken.

Lead is used for other alloys than bronze and brass; it is alloyed with antimony for making type metal, with bismuth for fusible alloys, and with arsenic for making shot.

MANGANESE IN ALLOYS.

38. Manganese has a specific gravity of about 7.5. It is of a whitish-gray color, of high metallic luster, and is sufficiently hard to scratch glass. It is alloyed with iron and copper—in iron as ferromanganese and with copper as manganese copper, which is its best form for the use of brass founders, as in the form of ferromanganese it introduces the iron into the alloys of brass, much to their injury. An alloy of about 70 parts of copper to 30 parts of manganese is on the market, and is used in copper mixtures to give manganese alloys a range in manganese from a trace up to 5 per cent. It can be mixed with copper to give a metal that may be forged. It is said to give good bearing and journal castings, and is used extensively in casting propeller wheels, both on account of its strength and ductility. Propeller wheels made of this metal are made thinner than is permissible with other metals, because, if bent, they may be straightened again; although it is better to cast them so thick that they will retain their shape when they strike an obstacle when in action.

Manganese bronze does not corrode easily, and for this reason is used in the form of sheets for mining screens, since

the acid mine waters have no effect on it. It weakens somewhat, however, when heated, and has a greater percentage of shrinkage than gun metal.

A mixture found to work well in journals and similar castings is as follows: Copper, 40 parts; tin, 3¼ parts; zinc, 2¼ parts; and manganese, 2½ parts. Another mixture suitable for propellers, gear-wheels, and heavy machinery is: copper, 54 parts; zinc, 40 parts; tin, 2¼ parts; and manganese, 3¾ parts. To make metal suitable for the sheets of mining screens, more copper and manganese and less zinc are required. When the alloy is very high in manganese, it may require chilled molds for casting; whereas with less manganese, the castings can be made in sand molds.

To make a metal that resembles German silver, and that has high electrical resistance, the following mixture may be used: Copper, 67½ parts; manganese, 18½ parts; zinc, 13 parts; and aluminum, 1¼ parts.

BISMUTH IN ALLOYS.

39. Bismuth.—The specific gravity of **bismuth** is 9.8, and it melts at about 500° F., but as an ingredient in alloy with other metals, the melting point is lower, one form of solder containing bismuth melting at 212° F. It is very brittle, a little harder than lead, and has a yellowish-white color. As sold commercially bismuth is not pure, containing iron and arsenic. It possesses the peculiar property of expanding while cooling, which makes it very valuable in connection with some forms of castings, especially printers' type.

When alloys having bismuth as a constituent are used in casting, the castings should be cooled as rapidly as practicable, as otherwise the bismuth may separate from the other metals and weaken the castings.

Mr. Erwin S. Sperry concludes, as the result of five experiments on alloys having about 60 parts of copper, 40 parts of zinc, and bismuth that varied from .5 to .02 of

1 part, that bismuth causes brass to be cold short and hot short, and to have both visible and latent fire-cracks; also, that high brass for cold rolling should not contain over .01 per cent. of bismuth. It is not known whether Mr. Sperry knew that it was essential that castings containing bismuth should be rapidly cooled, which is important in remedying the defects to which he refers. If he did cool his castings rapidly and then got those results, it would indicate that bismuth was not a desirable material to mix with brass.

ANTIMONY AND BABBITT METALS.

40. Antimony is a metal having a brilliant silvery-white color. Its specific gravity is 6.7, and it melts at 830° F. At common temperatures it does not oxidize. It unites with sodium, potassium, and lead, forming with them a more homogeneous mixture than does any other metal. In alloy with other metals, it hardens and whitens them, and the alloy contracts very little while cooling. For these reasons it is an excellent metal to use in making printers' type and plates. It is used for type metal, in the manufacture of pewter articles, antifriction alloys, etc. In the manufacture of type metal, 1 part of antimony is used to 4 parts of lead, and for stereotyping plates there is added to this $\frac{1}{20}$ to $\frac{1}{50}$ part of tin.

A very hard pewter is made from 8 parts of antimony, 2 parts of copper, and 96 parts of tin. By increasing the copper, a softer pewter can be made. In making Britannia metal, 8 parts of antimony, 2 of bismuth, 2 of copper, and 100 parts of tin are melted together.

41. Babbitt metal was named from the inventor of the journal-box in which antifriction metal was first used. Its original composition, so far as known, was 89.3 per cent. of tin, 7.1 per cent. of antimony, and 3.6 per cent. of copper. It is claimed by some writers that the original composition was 83.3 per cent. of tin, 8.3 per cent. of antimony, and 8.4 per cent. of copper.

Babbitt metal is made that varies considerably in the amounts of the various constituents, as tin, copper, antimony, bismuth, zinc, and lead, in order to make the metal suitable for the various conditions of bearings, weight, and speed of rotation of the shafts and spindles for which it is used.

Antimony is used largely in the composition of the best grades of Babbitt metal; these are made with tin as the principal constituent, the ones next in importance being antimony, and a small percentage of copper; no lead is used in what is termed the genuine Babbitt metal. Antimony gives hardness to the Babbitt, while the tin gives the antifriction qualities. Owing to the difference in the cost of lead and tin, there is a temptation to adulterate with lead. The grades having lead as a constituent should not be used in bearings that support heavy loads or have great friction. The addition of lead to Babbitt metal may be determined by rubbing the metal on paper; if lead is present, it will leave a mark somewhat similar to that made by a lead pencil.

Among the soft metals in use, it is claimed that none of them has greater antifriction properties than lead; but on account of the impracticability of keeping it in the journal-boxes, it cannot be used in the pure state.

Lead and antimony have the property of combining with each other without impairing their antifriction quality. The following mixture of them is said to be excellent for light, high-speed machinery: 80 parts of lead, by weight, mixed with 20 parts of antimony. In using it, however, it must never be heated sufficiently to scorch a splinter of dry pine.

In making Babbitt metal, the copper is first melted and the antimony added, and then about 10 or 15 pounds of tin, the whole being kept at a dull-red heat and constantly stirred until the metals are thoroughly mixed, after which the balance of the tin is added, and after being thoroughly stirred it is cast into ingots. In melting the alloy to pour it into journal-boxes, it should be kept carefully covered with charcoal to prevent the antimony from vaporizing. This metal

TABLE IV.

COMPOSITION OF BEARING METALS.

Metals.	Copper.	Tin.	Lead.	Zinc.	Antimony.	Iron.
Camelia metal	70.20	4.25	14.75	10.20		.55
Antifriction metal	1.60	98.13				Trace
White metal			87.92		12.08	
Car brass lining		Trace	84.87		15.10	
Salgee antifriction	4.01	9.91	1.15	85.57		
Graphite bearing metal		14.38	67.73		16.73	(?) (1)
Antimonial lead			80.69		18.83	
Carbon bronze	75.47	9.72	14.57			(2)
Cornish bronze	77.83	9.60	12.40	Trace		Trace (3)
Delta metal	92.39	2.37	5.10			.07
American antifriction metal			78.44	.98	19.60	.65
Tobin bronze	59.00	2.16	.31	38.40		.11
Graney bronze	75.80	9.20	15.06			
Damascus bronze	76.41	10.60	12.52			
Manganese bronze	90.52	9.58				(4)
Ajax metal	81.24	10.98	7.27			
Antifriction metal			88.32		11.93	
Harrington bronze	55.73	.97		42.67		.68
Car-box metal			84.33	Trace	14.38	.61
Hard lead			94.40		6 03	
Phosphor-bronze	79.17	10.22	9.61			(5)
Ex. B. metal	76.80	8.00	15.00			(6)

OTHER CONSTITUENTS.

(1) No graphite.
(2) Possible trace of carbon.
(3) Trace of phosphorus.
(4) No manganese.
(5) Phosphorus, .94.
(6) Phosphorus, .20.

when carefully prepared is probably one of the best in use for lining boxes that are subjected to a heavy weight and wear.

42. Composition of Bearing Metals.—Table IV gives the constituents of the most prominent of the bearing metals, as analyzed in the Pennsylvania Railroad laboratory at Altoona, Pennsylvania.

PHOSPHORUS AND PHOSPHOR-BRONZE.

43. Phosphorus is a soft, translucent, colorless solid of a waxy consistency, having a specific gravity, when solid, of 1.83, and a melting point of 111° F. It increases the fluidity of some alloys, and increases the strength and ductility of the castings made from them. It is an excellent flux to use with copper because of its deoxidizing properties. It is the best agent known for reducing the shrinkage of the brass alloys, but when poured hot, it causes the metal to eat into the face of the mold, and so produces rough castings; for this reason the best results are secured with some **phosphor-bronze** castings when they are made in dry-sand molds.

Phosphorus reduces the strength of castings that are subjected to high temperatures, and will cause them to crack readily. It is alloyed with bronze in amounts that range from a few hundredths of 1 per cent. to 2 per cent.; but it does not always combine thoroughly with these bronze mixtures, and may cause hard spots in the castings. It is best added to alloys of copper, tin, and lead in the form of phosphor-copper, which is copper containing from 4 to 6 per cent. of phosphorus, and which is made by melting copper in a crucible and adding the phosphorus in the manner already described. Phosphor-tin is made by melting the tin separately and adding the phosphorus in the same way as for making the phosphor-copper.

Where the quantity of metal to be cast is small and does not warrant the making of the phosphor-copper or phosphor-tin, the phosphorus may be added to the alloy in the stick form, as already described.

44. Mixtures for Phosphor-Bronze Bearing Metals.—Table V gives the composition of the phosphor-bronze used by three of the prominent railroad companies of the United States.

TABLE V.

MIXTURES FOR PHOSPHOR-BRONZE BEARING METAL.

Number of Mixture.	Copper. Per Cent.	Lead. Per Cent.	Tin. Per Cent.	Phosphorus. Per Cent.
1	79.0	10.0	10	1.0
2	79.7	9.5	10	.8
3	79.7	10.0	10	.3

SCRAP METAL FOR BRASS AND BRONZE CASTINGS.

45. In the discussion of alloys, it has been so far assumed that new metal was used. As a rule, however, brass founders use more or less scrap metal, and many use scrap entirely, adding copper or lead to soften the mixtures, and tin or antimony to harden them; zinc is often used as an intermediate metal to change them slightly, vary the color, increase the fluidity, and to act as a flux. Furthermore, phosphorus and lead are used to give the peculiar qualities that they impart. In using all scrap metal, founders mix the scrap in such proportions as to regulate the color, degree of hardness, etc. that they wish to obtain, and so save the expense of new metal.

46. Grading Scrap Brass.—Scrap brass is graded by the color of its fracture, and is known as yellow, red, or white brass. The yellow brass is the most difficult to sort as to quality, as it may have any of the properties of the others, and, hence, is best used in small quantities in conjunction with the other varieties.

When the scrap has a reddish-colored fracture, it is generally an indication that it is rich in copper, and is a soft metal; if it has a light-colored fracture, it is assumed that it is rich in tin or antimony, or both, and is hard. By taking equal parts of each of these alloys and mixing them with from one-fourth to one-half of good copper, using a small quantity of lead in the molten metal to act as a flux, an excellent metal for journals and thick machinery castings is obtained.

When putting the lead in as a flux, the molten metal should be thoroughly stirred with a rod around the sides of the crucible; in fact, this should be done with all scrap mixtures, as well as with new metal, as it assists in bringing the oxides and occluded gases to the surface, where they may be removed or will pass into the air. In skimming the oxides, it is well to remember that new surfaces are being exposed to the air to form more oxides, and that the sooner the metal is poured after being skimmed, the better is the chance of getting clean, sound castings.

47. Using Brass Borings and Turnings.—Where the brass foundries are operated in connection with machine shops, there are usually quantities of borings and turnings from the shop to be used in the foundry. In such cases the borings, etc. are packed in a crucible and melted, after which solid scrap or new metal is added and melted and mixed with the scrap, the mixture then being treated as though only solid material had been used. No iron chips should be introduced with the mixture. Where there are iron filings and chips in the mixture, they may be removed by the aid of a magnet or by running the mixture through a magnetic separator.

48. Report on Journal-Bearing Metals.— In a report from a prominent railroad master mechanic on journal-bearing metals, the advisability of making the bearings entirely of new metal or mostly of scrap material, is discussed as follows: "It is manifestly absurd to charge all sorts of disreputable scrap into a crucible and expect to pour

out high-grade phosphor-bronze. The ordinary run of scrap available for use in car bearings is found to contain zinc and, generally, an insufficient amount of tin. The presence of zinc in moderate quantities is not necessarily a serious detriment, as more or less zinc is vaporized off in the melting. If tin is lacking, its deficiency should not go unfilled; enough tin should be added to form a proper alloy and give the metal fluidity. Of course, tin is a high-priced metal, but its moderate use is often necessary to obtain proper results. As is well illustrated under the microscope, lead does not chemically alloy with the bronze, but is held in the mixture mechanically, very much as water is held in a sponge; as much lead should be added as the alloy will hold up or absorb. This is desirable for a twofold purpose: lead improves the bearing qualities of the alloy and at the same time cheapens the cost per pound. One of the most troublesome conditions encountered in the production of bronze bearing metals is the great affinity that oxygen has for copper and its alloys in the molten state. If care is not taken in excluding oxygen from the metal, the resulting bearing on being fractured will show discolored oxide spots, which in a car bearing is fatal to cool running. The oxide, being harder than the unoxidized portion of the metal, is pretty certain to give trouble, for the hard spot, if occurring in the bearing surface, is almost certain to form the nucleus for a 'copper spot' and be the cause of a hot bearing."

BLACKSMITH-SHOP EQUIPMENT

HEATING DEVICES

FORGES

STATIONARY FORGES

1. Brick Forge.—A **forge** is an open fireplace, or hearth, with forced draft, arranged for heating iron, steel, and other materials. A very serviceable form of **brick forge** is shown in Fig. 1. The hearth is usually rectangular in shape, and 26 or 28 inches in height. For ordinary work, the front $a\,b$ may be from $2\frac{1}{2}$ to 3 feet long, and the side $b\,c$ from 3 to 4 feet long. An iron water trough 6 to 8 inches wide is often fastened along the side $b\,c$. The brickwork is usually built with a space f in the top, for the fire and fuel. The depth of this space varies greatly, according to the work and the ideas of the workman, but it is usually from 4 to 8 inches; the bottom consists either of brickwork or of an iron plate, supported on bars.

The forge is usually provided with a hood to catch the smoke and lead it into the stack or chimney; Fig. 1 shows a sheet-iron conical hood attached to the chimney, but the hood may be square and is sometimes built of brick.

Where there is plenty of room in the smith shop and the blast is supplied by hand power, the brick forge is the type most frequently used. The advantages claimed for it are that it is little affected by the moisture of the atmosphere, costs less for repairs than the iron forge, and the form of the hearth may be quickly and easily changed to suit the requirements of the various classes of work.

COPYRIGHTED BY INTERNATIONAL TEXTBOOK COMPANY. ENTERED AT STATIONERS' HALL, LONDON

2. Forge Tuyères.—The bottom of the forge shown in Fig. 1 has a suitable opening cut in it, in which is fitted a **tuyère iron** (pronounced *tweer* iron), sometimes called an **air chamber**, or a **wind box**, for the purpose of admitting air under the fire. The bottom of the tuyère iron has an opening about the same size as the opening cut in the

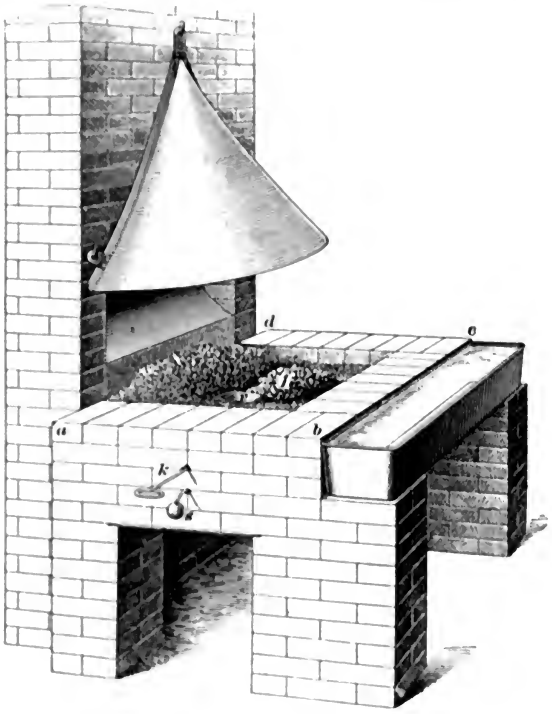

FIG. 1

bottom of the forge. This opening is closed by a valve of thin sheet iron by means of the handle *s*.

In Fig. 2 is shown a section of one form of tuyère iron commonly used. It has an opening *j* in one side, and one *g* in its top. The side opening is connected with a pipe through which air is supplied to the fire. The top opening

is usually capped with a nozzle *b*, and fitted with a valve *c*. This valve is made so that it will admit air to the fire and permit the cinders to drop into the bottom *e* of the tuyère iron. Between heats, or when the blast is shut off, the cinders are dropped from the tuyère iron into a cinder pit by opening the valve *f*, which is hinged at *h* and operated by the rod *k*.

The nozzle *v*, Fig. 1, and *b*, Fig. 2, with the valve *c* at the top of the tuyère iron, is called the **tuyère.** The valve is controlled by the handle shown at *k*, Fig. 1. A separate valve not shown in Fig. 2, but shown at *f*, Fig. 5, controls the amount of the opening for the air supply. The top of

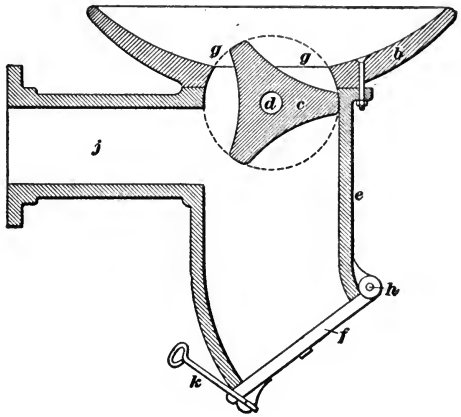

FIG. 2

the tuyère is usually so placed that it comes 3 or 4 inches below the level of the top of the brickwork, *a b c d*, Fig. 1, and from 12 to 15 inches in front of the chimney. The bottom of the fire space is occasionally covered with clay hollowed into a cup shape around the tuyère. In doing this, care must be taken to work, or temper, the clay to a proper consistency, for the stiffer it is, the less it will shrink and crack. Strong brine is often used to moisten the clay, as it keeps the bed from burning out too quickly. The space about the tuyère is also sometimes packed with cinders to the level of the tuyère. Suitable space is provided in the

forge bottom for the free movement of the handles *k* and *s*, sometimes by incasing them in pieces of wrought-iron pipe.

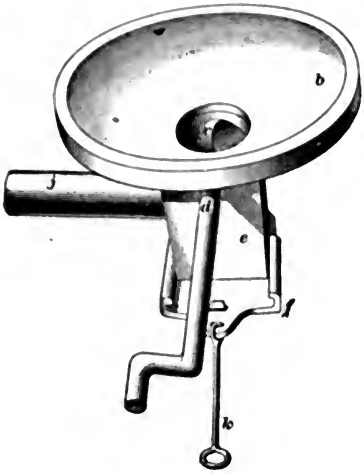

FIG. 3

Fig. 3 shows another common style of tuyère iron which is of cheaper and simpler construction than that shown in Fig. 2. The dish-shaped nozzle *b* has a circular hole in the bottom, below which is the valve *c*. By turning the rod *d*, the valve *c* is brought into different positions, thus increasing or diminishing the opening. The blast enters through the pipe *j*. The tube *e* is closed at the lower end by the shutter *f*. When cinders have collected in *e*, the shutter *f* is opened by means of the rod *k* and the cinders dropped out.

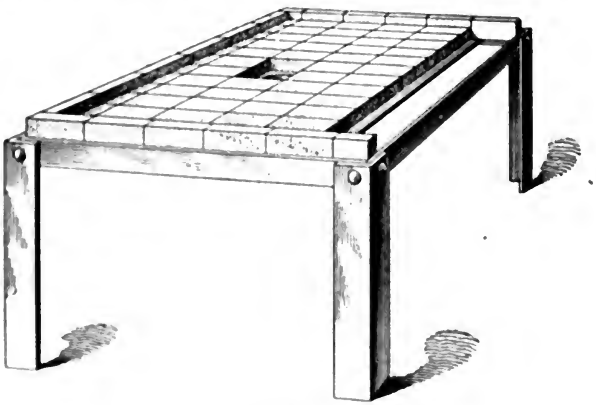
FIG. 4

3. **Combination Forge.**—Sometimes a combination brick and iron forge is made by supporting a frame of 2-inch

or 3-inch angle iron, about $3\frac{1}{2}$ or 4 feet by 6 feet, on angle-iron legs, as shown in Fig. 4. The bottom is formed of $\frac{1}{2}'' \times 2''$ iron strips, supporting a layer of common red brick. The tuyère iron is attached to two of the $\frac{1}{2}$-inch iron strips, and the bottom of the hearth is covered with clay or cinders.

4. Iron Forge.—The iron forge is made with a cast-iron bowl supported on legs. The tuyère iron is fastened in the bottom of the bowl and the air blast is supplied either from a stationary blower, or bellows, or from a small blower secured to the forge. The blower may be driven by a crank, a treadle, or a lever working with a ratchet. Fig. 5 shows an iron forge which is suitable for either stationary or

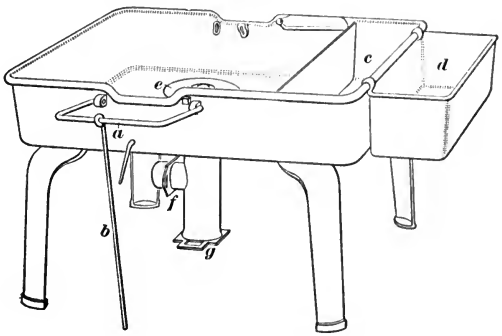

FIG. 5

portable use. It has no hood to obstruct the handling of the work. The blast is supplied from a blast pipe or from a small portable blower mounted on a separate stand; *a* is a rest for the tongs or long pieces of work; it is supported by the rod *b*; *c* is the coal trough and *d* the water trough; *e* is the top of the tuyère; *f* is the valve in the blast pipe; and *g* the cinder valve at the bottom of the tuyère iron.

PRODUCTION OF BLAST

5. The Bellows.—The air blast is produced either by means of a rotary fan or blower, or by a bellows. The bellows illustrated in Fig. 6 consists of two parts. These

are separated by a partition, and the air from the lower half is forced through the valves *f* in the center board into the upper chamber, where it is stored for use. The bellows is hung from the center board by pins *m*, and as the lower board is drawn up, the air in the lower part is forced through the valves *f* into the upper chamber, inflating it and raising the top board. As the bottom board descends, the valves *f* close and the valves *c* open, allowing air to flow in and fill the space below the center board. By placing a weight on the top board, the air pressure in the upper part is increased. The top board should be held up when the bellows is idle for any great length of time, to keep the leather stretched to prevent it from cracking. This may be done

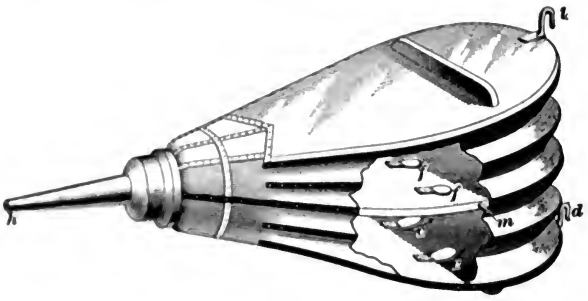

FIG. 6

by fastening the hook *l* in a chain suspended from the ceiling. With this care, the bellows will last much longer, for if the upper part is always folded together when not in use, the leather will soon crack and the upper part will be spoiled while the lower half is still in good condition. The operating chain or rod is attached to the hook *d*, and the air from the upper part discharges through the tube or nozzle *h*. The leather of the bellows should be oiled two or three times a year with neat's-foot oil or harness oil to preserve it. It should always be oiled before cold weather sets in, so as to make it pliable during the winter. On a cold morning, the bellows should be started slowly, so as not to crack the leather while it is stiff with the cold.

6. Rotary Blower or Fan.—The rotary blower or centrifugal fan, Fig. 7, has a number of blades set nearly radially on the shaft and placed within a cylindrical iron casing, with inlet holes *d* concentric with the shaft on each side, and an outlet, opening into the delivery pipe *k*, at the periphery of the casing. The shaft is driven by a belt passing over a pulley *e*. The centrifugal force, caused by the rapid rotation of the blades, throws the air outwards, that is, away from the center. The air close to the shaft rushes in through the opening *d*, to fill the space, and so a constant blast is maintained.

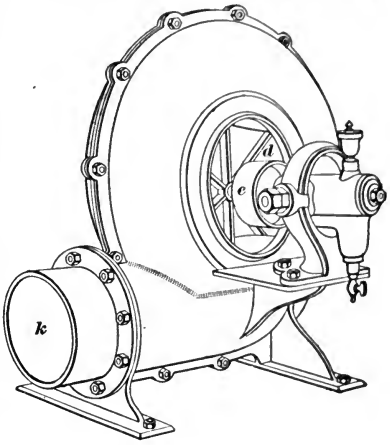

FIG. 7

For small forges, hand-driven rotary fans are very frequently used. There are a number of styles on the market driven by cranks either through trains of gears or through belts. These portable hand blowers, however, are used more in small smith shops than in blacksmith shops connected with manufacturing plants. One of their principal advantages is that they take up less room than the bellows and are in many cases capable of producing a much greater blast pressure. A good hand blower should be so constructed that it can run in either direction without drawing ashes back into it. Power-driven fans may be operated by a belt from a pulley on the line shafting, by belting from an electric motor, or by direct-connected motor.

Several forms of **blast gates** are used in the blast pipes of power fans. These should be so placed that they may be conveniently operated by the smith while working at the forge. The blast gate, when closed, completely shuts off the air supply, but when opened, admits the blast to the tuyère; it can be set so as to supply the blast to suit the

work. There are two general styles of gates for controlling the air pressure; one is an ordinary damper like that placed in a stovepipe, and the other is a slide that can be pushed in or drawn out through an opening in the side of the air pipe.

7. Positive Rotary Blower.—A positive blower differs from a fan in that it has two rotating pistons placed with their axes parallel and geared together at either one or both ends with gears of equal diameter. The pistons, or air impellers, have curved sides, and are so placed with reference to each other that they mesh correctly; they are, in fact, cycloidal gears with two teeth each. Because of this combination of form and arrangement of the pistons, the blast produced by the positive type of blower differs from that of the fan previously described. This blower delivers a definite quantity of air under pressure into the delivery pipe at each revolution of the pistons. Thus the air may be forced through an opening against resistance, such as a varying amount of cinders, coal, or metal covering a tuyère. A blast of this character is called a **positive blast**, and machines for producing it are called **positive blowers.**

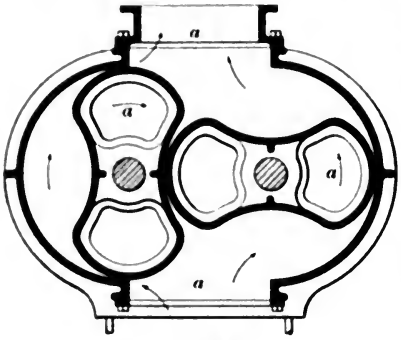

FIG. 8

Fig. 8 is a sectional view of one form of these rotary blowers taken at right angles to the axes of the pistons. The arrows at *a*, *a* show the directions of rotation of the pistons, and the direction of the air at the intake and delivery pipes. This same form of blower is sometimes connected to small forges and operated by hand.

8. Water Gauge.—For measuring the blast pressure, a **water gauge** is generally used. A simple form can be made by bending a $\frac{3}{8}$-inch glass tube to the shape shown in

Fig. 9. The tube is fastened to a board, and a scale, graduated in inches, is made to slide vertically between the two parallel arms of the tube. The air pipe, having a stop-cock at *s*, is then connected at *c* and the end *a* is left open. Water is poured into the tube until it rises to the height *d* in both tubes. The stop-cock *s* is then opened, and the air-blast pressure forces the water up in tube *a*; the scale is then moved into position so that the zero mark is on a line with the water level in the shorter tube, and the reading is taken at the level of the water in the long arm. Ordinarily, a blast of from 4 to 6 ounces pressure to the square inch, or, approximately, 7 to 10 inches of water, is used for a blacksmith's forge. A pressure of 1 pound to the square inch is equal to the pressure of a column of water with an area of 1 square inch and 27.7 inches high; and the pressure of 1 ounce to the square inch is equal to a pressure of 1.73 inches of water.

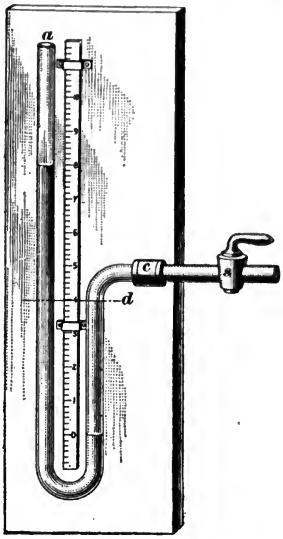

FIG. 9

DISPOSAL OF SMOKE AND GASES

9. Hoods and Chimneys.—In the case of a single stationary forge like that shown in Fig. 1, the gas and smoke from the fire are usually drawn up through the hood by the natural draft of the chimney. Where the forge stands in the center of the room, the hood is sometimes suspended over it and connected with a sheet-iron chimney going straight up through the roof. If these chimneys are provided with some form of top which will insure a draft no matter which way the wind blows, they are quite efficient.

10. Overhead Exhaust System.—In the overhead exhaust system, a hood is hung over each fire and the pipes

from the hoods are carried to a common exhaust pipe, from which the smoke is drawn by means of a fan. This system is positive in its action and gives quite efficient service, but the suspended hoods and pipes are frequently in the way of cranes or other handling devices; they also obstruct the light to a certain degree.

11. Down-Draft System.—In the down-draft system, the hood is placed at one side of, and extending partly over, the fire, and is connected by an underground pipe with a fan, which draws the smoke and gases into the hood and through the pipe. A forge arranged for use with this system is shown in Fig. 10. Sometimes the fan that exhausts the smoke is so arranged that it returns a portion of the smoke and air to the forge as an air blast. As ten or twelve times as much air as smoke enters the hood, the mixture does very well for air blast. Besides, it has the advantage of being warm. When this system is used only one fan is necessary, the portion of the air and smoke not needed for the forge blast being delivered outdoors. Sometimes, however, it is preferred to use independent fans for the exhaust and the blast; and as the blast is always required at a higher pressure than is necessary at the outlet of the exhaust fan, it is probable that the double-fan system is the better for large shops. The greatest advantage of the down-draft system is that the space above the forge is clear for the use of cranes or handling devices, and that there are no pipes to obstruct the light.

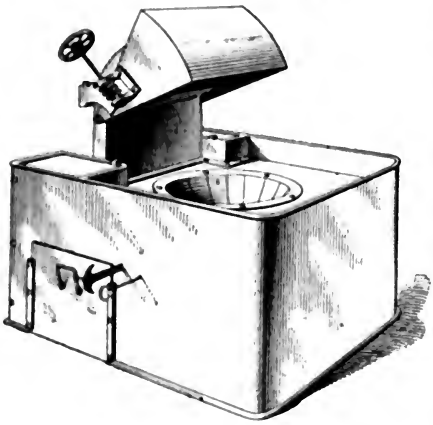

FIG. 10

12. Blast Pipes.—The fan or blower should be located as close to the forge as possible, and care should be taken to avoid unnecessary bends in the pipe, because there will be considerable loss in pressure when forcing air through a long pipe or one having abrupt bends. The bends, if any, should be made in easy curves. In cases where a large number of forges are supplied with air from one fan, or blower, care must be taken to proportion the various branches of the pipe system correctly. The fan or blower must be run at a speed that will give more than 4 ounces pressure near the fan, in order to allow for the loss of pressure in the pipe and insure the proper pressure at the tuyère. The manufacturers of fans and blowers furnish tables giving the proper sizes and proportions of blast pipes.

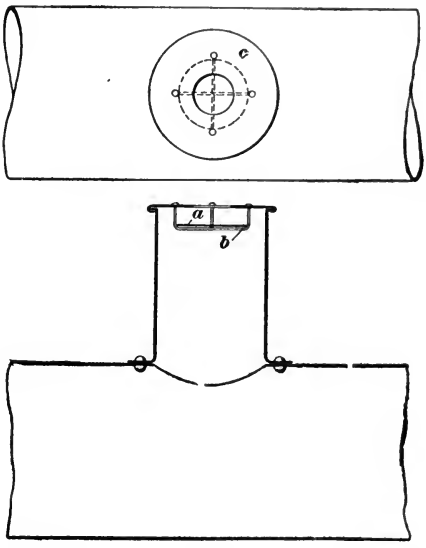

FIG. 11

13. Danger of Explosion.—Sometimes coal gas works back into the blast pipe when the fan is not running, as at noon, forming a mixture of gas and air that may explode and burst the pipe when the fan is started. This is particularly the case if the blast pipe is overhead. The danger of explosion may be prevented by having one or more valves in the top of the pipe, as shown in Fig. 11, to allow the gas to escape. The valve *a* is made of thin sheet iron, and is held up by the blast when the fan is running, but drops on cross-wires *b* and permits the gas to escape when the fan is not running. A top view of this valve is shown at *c*; it is 3 inches or more in diameter.

14. Ventilation.—The ventilation of large blacksmith shops in which heavy work is done is a difficult problem. Probably the best way of warming is by hot air blown into the shop through numerous openings near the floor. This tends to provide fresh air near the floor, while the smoke may be removed from the upper part of the room either by opening ventilators, or overhead windows, or by the use of fans. Sometimes all these methods are used together.

PORTABLE FORGES

15. Portable forges are those that may be moved about easily. They are of various designs and constructions, in order to meet the requirements of special classes of work. For example, some classes of work might have to be done by blacksmiths, others by machinists, bridge builders, boilermakers, etc. There are many kinds of work to which these forges are adapted, but they are especially useful when work is done away from the shop.

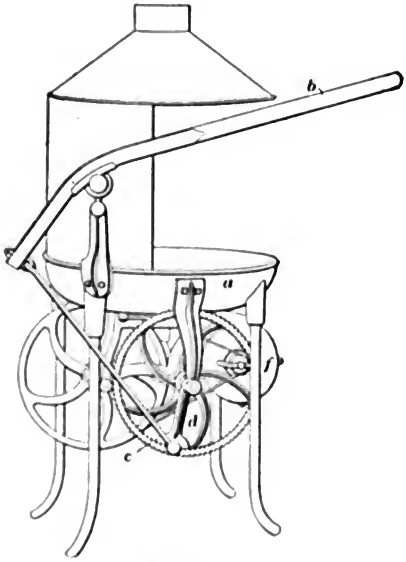

FIG. 12

Fig. 12 shows a portable forge that is much used for heating rivets. It has a cast-iron bowl *a* supported on legs made of iron pipe. The blast is supplied from a small rotary fan *f*, secured beneath the bowl. The fan is operated by the lever *b*, connected with a second lever *d*, which carries a ratchet on its outer end that engages with ratchet teeth on the inside of the gear *c*.

FORGE FIRES

FUELS

16. Coal.—The **fuel** that is most commonly used on blacksmiths' forges is **bituminous coal,** usually called **soft coal.** It is broken into small pieces, and when free from sulphur and phosphorus and of good quality is excellent for this purpose. A fuel containing either sulphur or phosphorus should be avoided, as they will be absorbed by the iron. Sulphur makes the iron **hot short,** that is, it makes it brittle while hot; and phosphorus makes it **cold short,** that is, brittle when cold.

Some grades of bituminous coal burn too rapidly, and some contain too much earthy matter to give a free-burning, clean fire producing a proper heat.

Anthracite culm or hard-coal siftings may be used at times, but this fuel is apt to contain a larger percentage of impurities than soft coal. In order to use it, careful attention must be given to the blast, and in any case it will not make a hollow fire.

17. Coke.—Coke is a solid fuel made from bituminous coal by heating it in the fire or in ovens until its volatile or gaseous constituents are driven off, the solid portion not being consumed. If the coal contains sulphur and phosphorus, these impurities will always exist in the coke, although a portion of the sulphur may have been driven off by the heat in coking.

18. Charcoal.—Another solid fuel made by artificial means is **charcoal.** It is the best fuel because of the small amount of impurities that it contains. It is unrivaled for heating carbon steels, giving a clean fire, free from sulphur and other objectionable matter. A charcoal fire is, however, not suitable for heating high-speed steels, as it is impossible to get the high temperature required. Charcoal made of maple or other hardwood is the best. Some

manufacturers of twist drills, reamers, milling and other cutting tools, use charcoal exclusively. The objections to this fuel are that its cost is high and that it heats the work more slowly than coal.

FIRE AND FIRE-TOOLS

19. The Fire.—In the combustion of fuel (charcoal, coal, or coke), the oxygen of the air combines chemically with the carbon of the fuel. This chemical combination produces heat; the temperature attained depends on the rapidity with which the combination takes place, and the amount of heat depends on the amount of carbon and oxygen combined within a given period of time. Under ordinary conditions, the combustion would not go on rapidly enough to generate sufficient heat to raise iron or steel to the temperature necessary for working it under the hammer. Hence, the draft must be increased in order to supply more oxygen to the fuel, and thus increase the rate of combustion. It is possible, however, to supply too much air and blow out the fire, because too much cold air will chill the hot coals below the temperature at which the oxygen will combine with the carbon; or it may only lower the temperature by using the heat of the fire to warm the excess of air that passes through it. The greatest objection, however, to an excess of air is that too much oxygen will be supplied to the fire, and some of it will combine with the hot iron, forming **oxide of iron**, which is the black scale that falls from heated iron while being forged. A fire supplied with an excess of air is called an **oxidizing fire**, but if all the oxygen is used in the combustion and there is an excess of carbon, the fire is called a **reducing fire**.

A good way to start the fire is to heap coal all around the tuyère to a depth of 2 or 3 inches, leaving the tuyère uncovered. A handful of shavings or some oily waste is set on fire and put into the opening over the tuyère, and a small quantity of fuel is spread over it. The blast is turned on very lightly, and as the fire burns up, more fuel is added, and the blast is increased. A conical block of wood is sometimes

used. The block is put over the tuyère with the small end down, and the coal packed about it. The block is then taken out and shavings put into its place, and the fire started.

If coal is used for fuel, it is well to coke a quantity of it before putting the iron into the fire. The fire is kept from spreading by sprinkling water around the edges. The fire should not be allowed to burn too low, because this makes it necessary to place the iron nearer the tuyère and brings the hot iron too near the cold blast. For this reason, the blast must always have a good bed of fire to pass through before coming in contact with the iron that is being heated. The hot iron should not come in contact with the fresh coal. As the fuel is burned, the coke is brought toward the center and

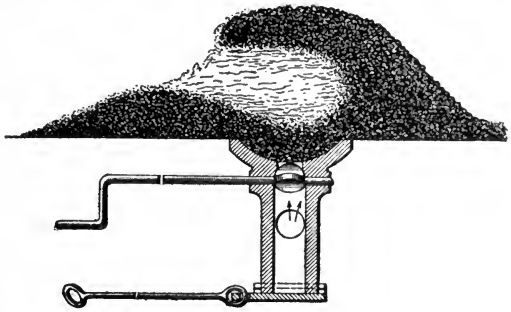

FIG. 13

fresh fuel is added on the outside of the heap, where it can coke slowly. The fire must always be kept clean, all cinders, ashes, and scraps of iron being removed. Care should be taken to prevent lead and Babbitt metal from getting into the fire, as they are objectionable, particularly if welding is to be done.

If the fire is not to be used for some time, it may be held by putting a stick of hardwood into the fire and pounding the fuel down around it. The blast is then turned on gently for a few moments to liven it up well. After this, it may be left without a blast for an hour or more, and can be restarted by turning on the blast. The ashes and cinders are then raked out and blown out with the blast, or dropped through the tuyère into the cinder pit.

20. Forms of Fire.—The fire may be maintained either open or hollow. In the **open fire**, the combustion takes place on top of the heap over the tuyère; while in the **hollow fire**, a section of which is shown in Fig. 13, the combustion takes place inside, the top being roofed over with coke and coal. A hole is left in front for the iron. The advantages of the hollow fire are that it is much hotter than the open fire, as the hot roof radiates heat as well as the hot sides and bottom, and it also heats the iron more evenly, and thus lessens the chilling by contact with the outside air.

21. Fire-Tools.—The following fire-tools should be provided for each forge: A **poker**, Fig. 14 (*a*), which is a

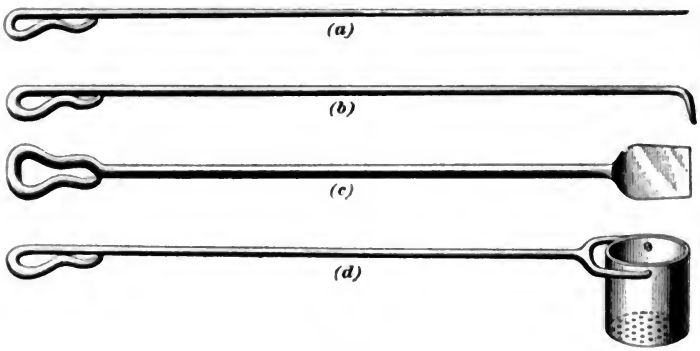

FIG. 14

rod of iron or steel about $\frac{1}{2}$ inch in diameter and at least 20 inches long, with a handle at one end; a **fire-hook**, Fig. 14 (*b*), which is similar to the poker, but has a hook bent on one end; a **shovel**, Fig. 14 (*c*), which has a sheet-iron blade and a long handle; and a **sprinkler**, Fig. 14 (*d*), which consists of a forked iron handle sprung into holes in a tin can, the bottom of the can having holes punched in it for the escape of the water. This is used for cooling parts or pieces of iron and for keeping the fire from spreading.

BLACKSMITHING TOOLS

THE ANVIL

22. Construction of the Anvil.—The ordinary blacksmith's **anvil** is shown in Fig. 15. It has a horn *a* on one end, around which bending is done. The body of the anvil may be made either of wrought iron, or of a special quality of cast iron, or it may be a steel casting. The top is faced with steel, which is sometimes planed true and then hardened, or first brought approximately to shape and then hardened and finished by grinding. Anvils having cast-iron bodies usually have unhardened steel horns, which are tough and not easily broken. Anvils having wrought-iron bodies usually have horns of the same material. It is claimed that the cast-iron body gives a firmer backing for the steel face of the anvil than does wrought iron. The face of steel is usually hardened under a flow of water. If too soft, it will nick; and if too hard, it is liable to chip at the corners and edges. Anvils made of the usual qualities of cast iron are brittle. A cast-iron anvil with a horn of the same material cannot be used for heavy work because the horn is liable to be broken off, which is not the case with the wrought-iron anvil. For light work, however, the cast-iron anvil will give good service.

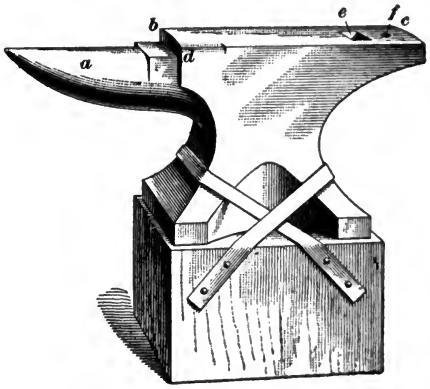

FIG. 15

Square-faced anvils without horns are frequently made of cast iron, but the edges chip off easily.

The face of the anvil is straight lengthwise, as shown from *b* to *c*, Fig. 15, but it is slightly crowned crosswise from *b* to *d*, as shown somewhat exaggerated. If the face of the anvil were perfectly flat, a straight piece of iron would show a tendency to curl upwards while being hammered when held crosswise of the anvil, and unless it were held perfectly flat on the anvil it would sting the hand; besides, there would be danger of nicking the iron where it rests on the corner of the anvil. When hammering a piece of iron on the crowned face of an anvil, the effect of the blow is more nearly confined to that part of the face where the hammer strikes; thus the crowned face acts to some extent like a bottom fuller, which is described later. A portion of the edge of the face is sometimes rounded, as shown at *d*.

At the right-hand end of the anvil there is a square hole *e* called the **hardie hole**, in which cutting and forming tools are held. The small round hole *f* near it is called the **pritchel hole**; the core of small holes is punched out through it.

23. Setting an Anvil.—The anvil should be placed on a solid block of wood, preferably a butt end of oak, and should be fastened to it with iron straps, as shown in Fig. 15, or with staples. Anvils on which soft metals are to be worked often have a layer of leather, felt, or cloth beneath them. The height of an anvil should be such that when the workman stands beside it his knuckles will just reach its face.

24. The Weight of Anvils.—The weights of anvils vary greatly; small ones are used for light work and large ones for heavy work. An average anvil will weigh from 150 to 200 pounds. Formerly, most of the anvils used in the United States were imported from England. These generally have the weight stamped on the side, and on many anvils it is given in hundredweights of 112 pounds each. If a person stands facing the anvil, with the horn to the right, the weight is generally found stamped on the near side; the figures toward the left designate the number of hundredweights of

112 pounds; the figures in the center denote the quarters of a hundredweight; and the figures at the right side show the number of extra pounds. Thus, if an anvil is stamped 2–2–17, it means 2 hundredweight of 112 pounds each, which is 224 pounds, 2 quarters of a hundredweight, which is 56 pounds, and 17 pounds, making the total weight of the anvils 224 + 56 + 17 = 297 pounds. However, the present practice among American makers is to stamp their anvils with the direct weight in pounds.

HAND TOOLS

HAMMERS AND SLEDGES

25. Classification.—Hammers are classified, according to weight, as *hand hammers*, *hand sledges*, and *swing sledges;* according to the peen, into *ball-peen*, shown in Fig. 16 (*a*), *cross-peen*, shown in Fig. 16 (*b*), and *long-peen*, or *straight-peen*, shown in Fig. 16 (*c*).

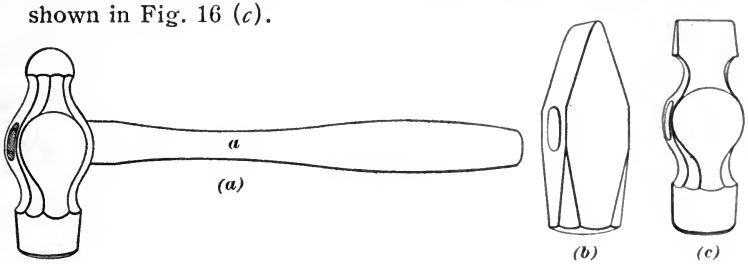

FIG. 16

26. Hand Hammers.—The hand hammer is made to use with one hand and is handled by the smith himself. It should not weigh more than $2\frac{1}{2}$ pounds, a 1-pound hammer being a very convenient size for small work. The handle should be well formed, elliptical or oval in section, and a little thinner toward the head, as shown at *a*, Fig. 16 (*a*); this is done to give it a spring, in order to avoid stinging the hand. It is from 14 to 16 inches long, and is made of a size that will fit the hand comfortably. A handle of improper shape is apt to tire or cramp the hand. It should be durable, not a makeshift, for the smith soon becomes

accustomed to a hammer, and knows what effect a blow will have. It is dangerous to use a hammer with a loose head.

27. Hand Sledge.—A hand sledge, shown in Fig. 17, is larger than the hand hammer. It weighs from 5 to 8 pounds and is used by the helper, who holds it with both hands. The handle is from 26 to 34 inches long, and not so slender, in proportion, as the handle of the hand hammer. In striking with the hand sledge, the helper holds it in both hands and strikes a shoulder blow; that is, he raises the head of the sledge to the shoulder and strikes from this position. Both large hammers and hand sledges are frequently called *flogging* hammers.

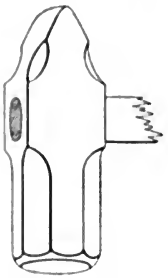

FIG. 17

28. Swing Sledge.—The swing sledge, one form of which is shown in Fig. 18, weighs from 8 to 20 pounds, or more. The handle is about 3 feet long. In using the swing sledge, the helper grasps the handle near the end with both hands, and strikes a full-arm-swing blow. This sledge is used for striking a heavy blow. The swing sledge is also made of the form shown in Fig. 17.

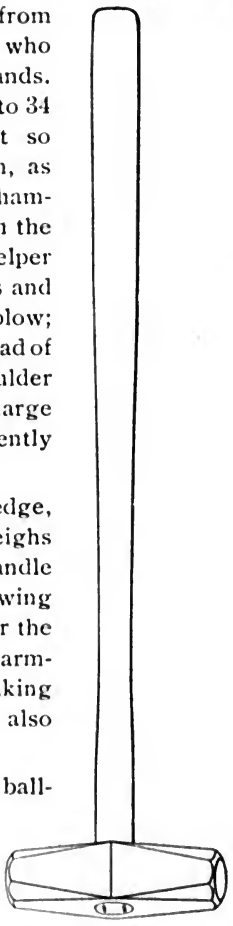

FIG. 18

29. Ball-Peen Hammer.—The ball-peen, or **chipping hammer,** shown in Fig. 16 (*a*), is a hand hammer that has the peen in the shape of a ball. The peen is used in riveting, or where it is required to stretch the metal in length and width, or for working in a hollow.

30. Cross-Peen Hammer.—The cross-peen hammer, shown in Fig. 16 (*b*), is used when it is required to stretch

the metal lengthwise, but not crosswise. The cross-peen hand hammer is also used for riveting.

31. Long- or Straight-Peen Hammer.—The long-peen or straight-peen hammer, shown in Fig. 16 (*c*), is used when the metal is to be spread sidewise. These hammers are made of different weights, and are selected to suit the work and the strength of the smith; a good set of hand hammers consists of a 1-pound ball-peen, a 1½-pound straight-peen, and a 2-pound cross-peen hammer.

32. Material Used for Hammers.—Hammers were formerly made of wrought iron or mild steel and faced with tool steel. If the whole head is made of tool steel, it is liable to chip and crack, but with a soft backing this is avoided to a great extent. Hammers made of a special cast steel, called hammer steel, are much used at present, and give entire satisfaction.

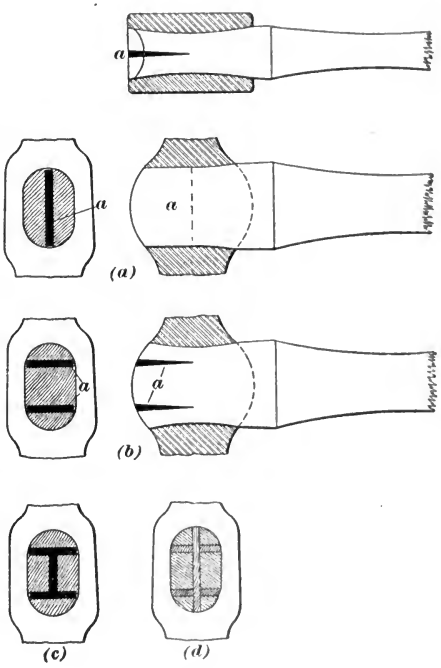

FIG. 19

33. Hammer Handles.—Hammer handles should be made of the best quality of white, straight-grained, second-growth hickory that has been well seasoned. The handle should be carefully fitted to the eye in the hammer head so that it fills the eye as nearly as possible. The handle must also be at right angles to the hammer head,

so that when striking a blow the head will fall squarely, and not on the edge.

The eye in the hammer head is generally made larger at its ends than at the middle. When the end of the handle is properly wedged, it will spread in the eye and hold the handle securely in the head. The eye is widened sidewise, or lengthwise, and often in both directions from the middle of the head toward the outside.

If the widening is sidewise only, but one wedge is used, as shown at *a*, Fig. 19 (*a*). If widened at the top and bottom, and not at the sides, two wedges are driven crosswise as shown at *a*, Fig. 19 (*b*). If the widening is in both directions, three iron wedges are used, as shown in Fig. 19 (*c*), or three wooden wedges, as shown in Fig. 19 (*d*).

FORMING AND CUTTING TOOLS

34. Set Hammers.—When a piece of work is of such shape that it cannot be reached so as to do the work properly with a hammer, a **set hammer** is used. The face of the

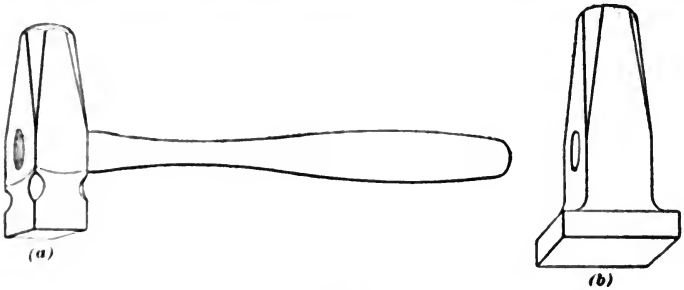

FIG. 20

set hammer is placed on the part of the work where the blow is desired, and the other end receives the hammer or sledge blow. Sometimes a set hammer is used to prevent marring the work, or to give some part of the work a definite form not readily obtained with the hammer. The faces of set hammers are formed into special shapes to suit the requirements of the various classes of work. The square set

hammer shown in Fig. 20 (*a*) is used to produce a flat surface, or make a square shoulder or offset.

35. Flatter.—The flatter, shown in Fig. 20 (*b*), is used for the same class of work as the square set hammer, the distinction between the two being that the flatter has a larger face. For this reason, the flatter is used to flatten down a surface in finishing, while the square set hammer is preferable when a square shoulder is to be made and the iron well driven down.

36. Fuller.—The fuller, shown in Fig. 21 (*a*), is used in spreading the iron. Owing to its shape it concentrates

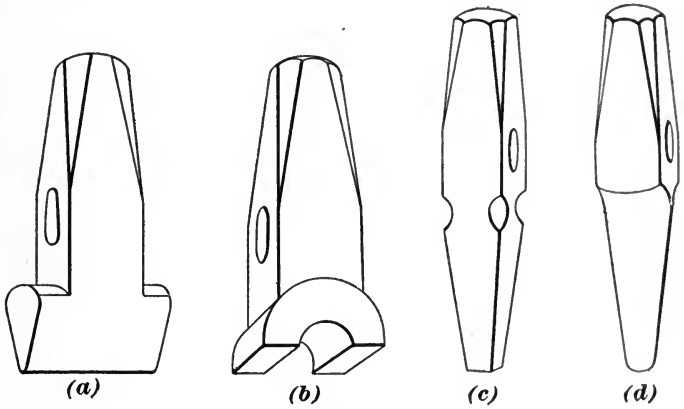

FIG. 21

the force of the sledge blow on a small surface and therefore makes it more effective at that place. The fuller spreads the iron at right angles to the working edges. Its action is the same as that of the cross-peen or long-peen hammer. It is also used for hollowing out work.

37. Swage.—One form of swage, also called a **collar tool,** is shown in Fig. 21 (*b*). Swages are often used in pairs, with the lower half, called the **bottom swage,** placed on the anvil with its square shank in the hardie hole.

The swage is usually a grooved tool, and is used principally for forming and shaping bar iron or rods into

circular or hexagonal sections. It is also used for forming flanges or collars on rods. Each swage is made for a section of a certain size. An assortment of four or more swages is generally kept at hand, hexagonal swages being used on bolt heads having six sides.

38. Punches.—Fig. 21 (*c*) shows a square punch, and Fig. 21 (*d*) shows a round punch. The punch is tapered, being small at the point and increasing in size toward the handle. The hole is made by driving the punch into the iron, and is then stretched by driving the punch through the work until the desired size is obtained.

39. Cutters.—A cold cutter, to be used with a wooden handle, is shown in Fig. 22 (*a*), and a **hot cutter** in Fig. 22 (*b*). The cutting edge of the cold cutter is slightly convex, and is ground so that it is more blunt than the edge of the hot cutter. The hot cutter is drawn out thinner than the cold cutter, and its edge is sharper. It is used for cutting hot metal. When properly tempered and ground, the cold cutter should hold its edge when cutting cold iron or steel. When used for this purpose, it is frequently called a **flogging chisel.** The cold cutter cuts, or nicks, and at the same time wedges the edges of the cut apart, while the hot cutter makes the cut as narrow as possible so as not to batter the cut ends. The cold cutter is used to nick the metal all around so that it can be broken. The cutting edge should be lubricated frequently by pressing it into a piece of oiled waste or by dipping it into water.

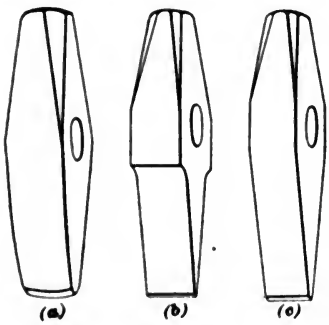

FIG. 22

40. For cutting off rivet heads, a cold cutter, similar to the punch shown in Fig. 21 (*d*), is used. The end of the tool is formed at a slight angle from the flat, varying from

20° to 30°, and the center of the face is slightly hollowed. For cutting down a straight surface, the side cutter shown in Fig. 22 (*c*) is frequently used. These side cutters are made either right or left.

ANVIL TOOLS

41. There are a number of tools, made to fit into the hardie hole, that correspond in shape to the set hammers.

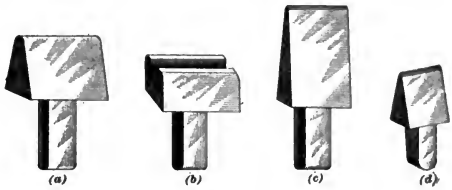

FIG. 23

The results obtained with them are similar to the results obtained with the corresponding set hammers. Fig. 23 (*a*) shows a **bottom fuller,** which, like the top fuller, is intended to spread or stretch the iron. The shank of the fuller fits into the hardie hole of the anvil.

Fig. 23 (*b*) shows a **bottom swage** with a single groove. It is similar to the top swage, and they are ordinarily used together. Bottom swages are frequently made with two or three grooves of different sizes in the same block.

FIG. 24

The **hot hardie** is shown in Fig. 23 (*c*) and the **cold hardie** in Fig. 23 (*d*). They correspond in shape to the hot and cold cutters. The hot hardie, being slender and ground to a thin edge, is suitable for making a sharp, clean cut; the cold hardie is thicker and its edge is ground more blunt, so that it may have proper strength to cut cold iron or steel.

The **heading tool,** shown in Fig. 24, is used in forming heads on the ends of rods, bars, bolts, and similar work. The hole through the head is usually circular or square. There should be an assortment of these heading

tools on hand to fit the various sizes of iron bars. The hole should be from $\frac{1}{32}$ to $\frac{1}{16}$ inch larger than the iron; $\frac{1}{32}$ inch in the case of $\frac{1}{2}$-inch diameter, increasing to $\frac{1}{16}$ inch on $1\frac{1}{4}$-inch and larger diameters.

TONGS

42. Tongs are used for handling pieces of hot iron of various forms. A few of the most common kinds are mentioned below. Special tongs are made to fit special forms, and it is frequently necessary to make a new pair or to alter a pair to fit some oddly shaped piece of iron. The parts of the tongs, Fig. 25 (*a*), are the *jaws a* and the handles *b*, sometimes called the *reins*. An oval ring *a*, Fig. 25 (*d*), called the *coupler*, is frequently slipped over the handles to hold the work tight, and thus relieve the hand from the more severe part of the holding strain.

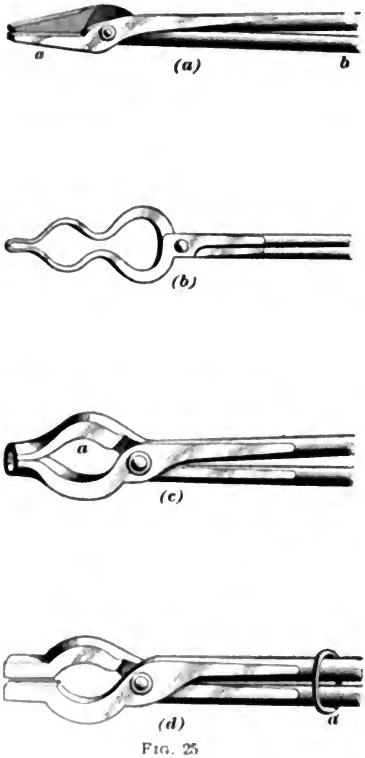

FIG. 25

The tongs should always be hung on a rack placed near at hand to prevent their being mislaid. The jaws should not be left in the fire if it can be avoided, for when they become hot they will bend apart and must be bent back before they can be used again, and besides they must be dipped into water. Repeated heating and dipping makes the iron brittle and spoils it.

Fig. 25 (*a*) shows a pair of **flat tongs** used for holding flat iron. When closed tightly, the jaws should always be parallel and have full-face bearing on the piece of iron being held.

Fig. 25 (*b*) shows a pair of **pick-up tongs** used for pick ing up pieces of iron, also for holding small pieces while tempering, etc. The jaws are bent to give them spring and the front bend is convenient for holding round iron.

Fig. 25 (*c*) shows a pair of **bolt tongs.** They are made for holding round iron and have a *pocket*, *a*, for the head of the bolt.

The **gad tongs,** shown in Fig. 25 (*d*), are used for holding flat or wedge-shaped pieces that have a head or large end.

Fig. 26 illustrates a form of tongs that has the lower jaw

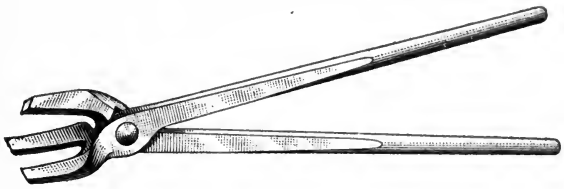

FIG. 26

divided into two prongs, while the upper jaw is **V**-shaped. The pressure of the upper jaw on the work being held comes between the prongs of the lower jaw. These tongs will hold round, octagon, square, and flat pieces of work with a firm grip when proper-sized tongs are used.

FLOOR AND BENCH TOOLS

43. Swage Blocks.—Figs. 27 and 28 show two forms of cast-iron **swage blocks.** These blocks have variously shaped grooves and holes cut into them, and are used like a swage or as a heading tool, and for similar work. They are really simple forms of dies. Fig. 28 shows a swage block on a stand. The grooves *h*, *h* in the edges are used for forming hexagonal heads and nuts of various sizes. The block may be turned on the stand to bring any side or edge up.

FIG. 27

44. Tapered Mandrel.—For forming rings and eyes, the **cone**, or **tapered mandrel**, shown in Fig. 29 (*a*) and (*b*), is largely used. It is made of cast iron and is formed of either one or two pieces. If it is formed of two pieces, as shown in Fig. 29 (*a*), the top piece, shown at the left and called the *tip*, is made with a shank on the bottom, which fits into the bottom piece and dowels the two parts together. The body *a* of the mandrel is given a plain smooth taper, but usually a groove *b* extends the entire length. This groove enables the smith to grasp the work with a pair of tongs while it is on the cone; or, in the case

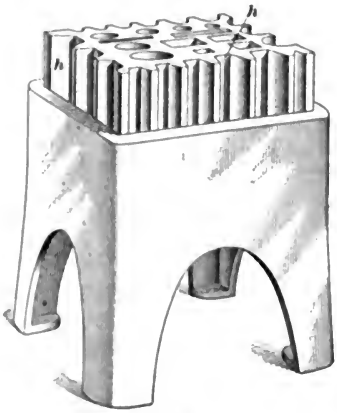

FIG. 28

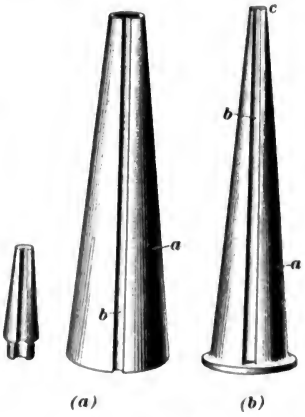

FIG. 29

of a ring attached to a chain, or of an eye on a ring, the link or eye enters the groove. Some cones are so tapered that the upper end *c* is little more than 1 inch in diameter; the diameter of the lower end ordinarily varies between 8 and 14 inches. The height ranges between $2\frac{1}{2}$ and 5 feet. When the cone is made in two pieces, the shank of the tip may be placed in a vise to hold it firmly for bending small work.

45. Surface Plate.—The ordinary surface plate is made of cast iron, varying in thickness from $1\frac{1}{2}$ to 4 inches, and planed smooth on the top. This planed face is used for testing work—to see whether it is straight, and to detect

warp or wind. It is also very useful in laying out work. The surface plate is generally placed on a small strong bench, as shown in Fig. 30, so as to be accessible from all sides. It should be carefully leveled and then secured in position; this makes it possible to test work on it by means of a level. Large surface plates are ribbed on the bottom to make them stiffer. Surface plates about 4 feet wide and 8 feet long are of convenient size for general use, the top being about $2\frac{1}{2}$ inches thick, with two side ribs around the bottom and several cross-ribs, making the total depth of the plate about 8 inches; these plates are used for rocker-shafts, yokes, and similar work. For use in shops where locomotive frames are made, plates about 4 or $4\frac{1}{2}$ feet wide by 20 or 24 feet long are used, made as shown in Fig. 31. The sides of these plates are 3 inches thick, and are connected by ribs as shown. The plate is planed on both sides, and may be turned over occasionally to keep it straight, as

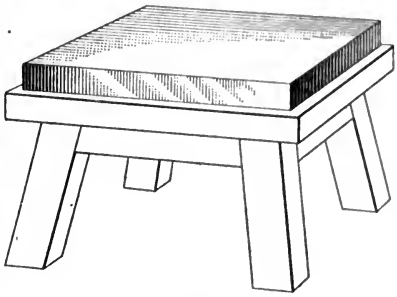

FIG. 30

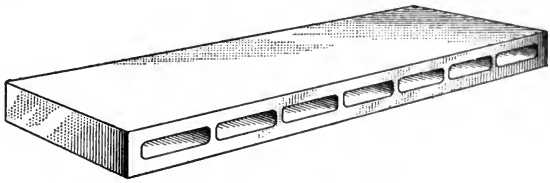

FIG. 31

the hammering it gets tends to stretch the upper surface and make the plate high in the middle.

46. Surface Gauge.—Fig. 32 shows a surface gauge that is used to scribe a line on a piece of work, *c*. This tool is used on the surface plate to draw, or scribe, lines parallel

to the surface of the plate. The sliding collar *a* can be set at any height on the vertical standard *b*, and the needle *d* can be clamped in any position on this collar.

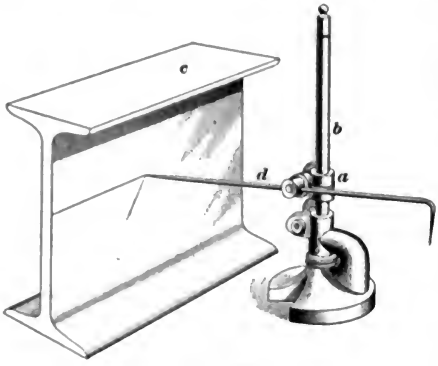

FIG. 32

47. Bench Vise. The vise is a tool in which the work is held securely for bending, twisting, chipping, filing, etc. The blacksmith's vise shown in Fig. 33 is called a **leg vise.** The leg rests in a solid block on the floor, while the body is secured to the bench with bolts through the strap *s*. The vise is made of wrought iron and has hardened-steel jaws. The screw has a square thread, and should be oiled occasionally. The top of the vise should be set at elbow height; this will be found most convenient for filing and chipping.

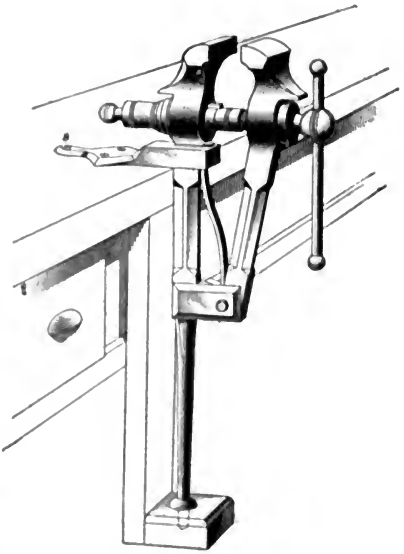

FIG. 33

48. Anvil Vise. In shops where heavy horseshoeing is done, a heavy 6-inch vise can, with advantage, be bolted to a $10'' \times 10''$ timber post set in the ground near the anvil. The jaws of the vise should be about the same height

as the top of the anvil. A vise thus arranged has several uses, the principal one being to clamp the hot horseshoe while bending the heel calk.

49. Vise Jaws.—A very necessary addition to the vise is a pair of copper **vise jaws**, shown in Fig. 34. These are made of sheet copper, from $\frac{1}{16}$ to $\frac{1}{10}$ inch thick, formed to fit over and between the jaws of the vise. They protect the work from being bruised, as it would be if it were clamped between the bare jaws. Besides, they protect the jaws of the vise, for it is often necessary to clamp hot pieces of iron in the vise. This would draw the temper out of the jaws if they came in direct contact with it. To make them more efficient for this purpose, pieces of asbestos paper are placed over the jaws of the vise, under the copper jaws. This makes the insulation very good, and, besides protecting the steel jaws, prevents the rapid cooling of hot iron by contact with the cold vise. Sheet-iron jaws are often used for hot work.

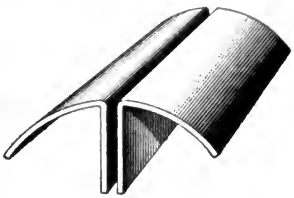

FIG. 34

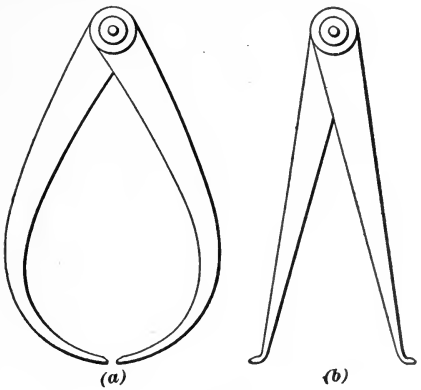

FIG. 35

50. Calipers. Calipers are used for measuring diameters, widths, and thicknesses. Single calipers are made of two pieces of sheet steel bent to the required shape and put together with a rivet. They are made to work rather stiffly, so as to remain wherever set. Fig. 35 (*a*) shows a pair of outside calipers, and Fig. 35 (*b*) a pair of inside calipers. Fig. 36 shows a pair of double calipers, which may be set

for two sizes, as, for instance, the width and thickness of a forging.

51. **Dividers.**—The dividers, shown in Fig. 37, are

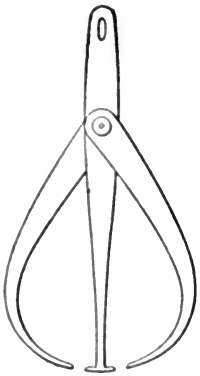

FIG. 36

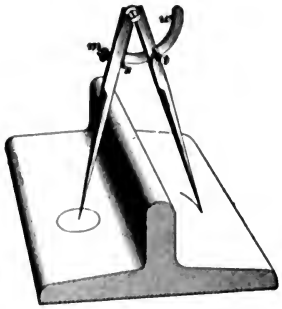

FIG. 37

used for measuring the distance between two points and for describing circles. The points are clamped by means of a thumbscrew *t*, which bears against the wing *w*, and the finer adjustments are made by means of the thumb nut *m*. The points are held apart by means of the spring *s*.

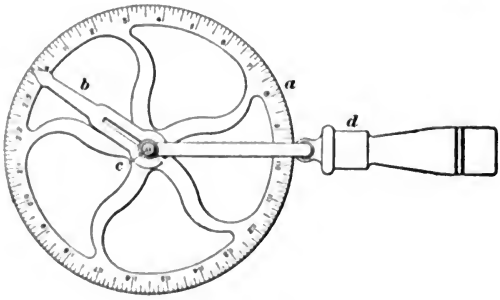

FIG. 38

52. **Measuring Wheel, or Circular Rule.**—The measuring wheel, or circular rule, shown in Fig. 38, also called a *traveler*, a *traverse wheel*, or a *tire wheel*, is usually a thin

circular ring *a* about $\frac{1}{10}$ inch thick. Sometimes the hub consists of a thimble fitted into a hole in the center of the wheel. This thimble also forms the support for an index arm, or pointer *b*, which turns with the wheel and may be set to any point on its circumference. The spindle *c* on which the wheel turns is held between the ends of a forked handle *d*, as shown. Sometimes a boss is stamped on one side of the wheel to form the hub, which is threaded and fitted with a thumb nut to bear on the pointer and hold it in position. The measuring wheel is sometimes a drop forging turned true on the edge and having the division marks stamped on one side in the process of forging.

The wheel usually has a circumference of 24 inches, which is subdivided on one side into inches, halves, quarters, and eighths, the zero and 24-inch marks being at the same point. Sometimes, however, the wheel is plain with the exception of one short radial line on one side touching the circumference. The wheel is carefully rolled over the length of the work to be measured, the measurement being started at and read from the zero line. The pointer is moved to indicate the point on the circumference of the wheel where the measurement ends. The number of complete revolutions of the wheel must be counted. Chalk marks on a plain wheel often serve as substitutes for a zero line and pointer. On curved work, the wheel should be moved over the line of mean length, between the outside and inside measurements.

53. Marking Materials.—A soapstone pencil is the best material for making surface marks on iron, although chalk, slate pencils, and crayons are used for the purpose. Soapstone marks will not burn off, and the end of the pencil may be filed wedge-shaped and used to give a sharp clear line for laying out work. Soapstone pencils are made both round and rectangular in section; in either case, the pencil is usually from 5 to 6 inches long. The round pencils vary from $\frac{1}{4}$ to $\frac{3}{8}$ inch in diameter; the rectangular ones are usually $\frac{1}{4}$ inch thick by $\frac{1}{2}$ inch wide.

54. Scriber.—In some cases, it is desirable to scribe on the metal a line that will cut through the surface scale. To do this, a steel **scriber** of the general form shown in Fig. 39 is used. It is usually from $\frac{3}{16}$ to $\frac{1}{4}$ inch in diameter and from 6 to 8 inches long. The point must be quite hard, and the temper of the rest of the tool must be carefully drawn to secure the necessary elasticity and to prevent the point from breaking off.

FIG. 39

55. Other Methods of Marking.—White lead or zinc white, mixed in naphtha or boiled linseed oil and applied with a slender brush, is often used to letter and number pieces of work, especially when shipped to a distance. Before laying out, the surface where lines are to be made may be whitened by rubbing with lump chalk or by coating with whiting and water, turpentine, or wood alcohol, which may be applied with a brush, and will dry quickly. When laying out work, the hand cold chisel and the center or prick punch are frequently used to locate the ends and intersections of lines marked on the piece of iron. Lines are often marked by a succession of dots made by the prick punch at intervals of from $\frac{1}{2}$ inch to 2 inches, according to the nature of the work.

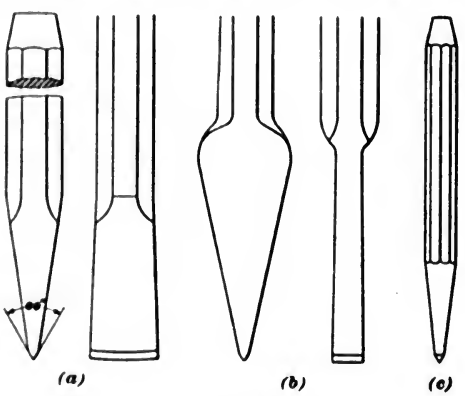

FIG. 40

56. Cold Chisel.—The cold chisel is usually of the form shown in Fig. 40 (*a*). A chisel about 1 inch in width and 7 or 8 inches long, made of $\frac{3}{4}$-inch octagon tool steel, is commonly used for general purposes. Small chisels are made of $\frac{5}{8}$ inch, or smaller, octagon steel. The illustration shows the edges formed by faces ground at an angle of 60°.

57. Cape Chisel.—The cape chisel shown in Fig. 40 (*b*) is used for cutting and trimming narrow grooves and slots, and is made in widths to correspond to the widths of the grooves to be cut. The length of the cutting edge should be slightly greater than the width of the tool behind it, to give clearance for the cut.

58. Center or Prick Punch.—The center, or prick, punch, shown in Fig. 40 (*c*), is made of the same material as the cold chisel. The size varies with the nature of the work, and may be from about $\frac{1}{4}$- to $\frac{5}{8}$-inch octagon steel. It is used to mark centers of holes to be drilled and to make small dots or marks wherever desired.

59. The Bevel.—A common form of bevel is shown in Fig. 41. The bevel is used to lay off angles other than right angles, and is usually set from a drawing or templet, or from a sample. It is sometimes called a **T** bevel, and often, incorrectly, a **bevel square.** The form illustrated has a cast-iron stock *a* with a slot in the middle of one end, through which slides a steel blade *b*, slotted for about one-half its length and capable of adjustment about a pivot in the end of the stock.

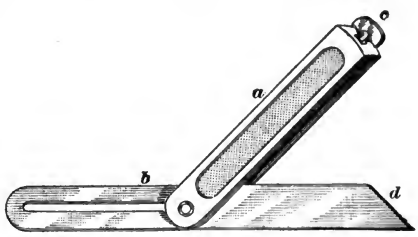

FIG. 41

The adjustment of the blade consists in varying the length of the projection of the blade *b* from either side of the stock, and of varying the angle that it makes with the stock. When the blade is set as desired, it is clamped by turning the thumb nut *c* on the end of the stock. The

side edges of the blade are parallel and the solid end *d* is generally cut at an angle of 45°, or one-half a right angle, with the edges. Care must be taken not to tighten the thumb nut with more than a gentle pressure, otherwise the threads may be stripped from the screw. It is well to keep in mind, for use in checking up work, that the sum of the two angles formed by an edge of the blade with the sides of the stock is equal to two right angles. For testing angles while the work is hot, there is usually a shop-made bevel formed of two strips of steel, about $\frac{1}{8}$ or $\frac{3}{16}$ inch thick by $\frac{1}{2}$ or $\frac{3}{4}$ inch wide, and from 12 to 16 inches in length. These pieces are riveted together at one end and are made to work rather stiffly, so that they will remain wherever set.

60. Measures.—For measuring long rods, or bars, such as suspension rods and hangers, the more careful workmen generally use a steel measuring tape. For the general requirements of measuring small work, both straight and

FIG. 42

curved, a thin metal rule, 2 feet long by $\frac{3}{4}$ inch wide, folding in the middle, is commonly used. It is made either of a good quality of tempered spring steel or of hard-rolled brass. Fig. 42 illustrates the general form of this rule.

61. Hack Saws.—The hack saw is now usually considered a necessary part of the blacksmith-shop equipment. Hack-saw blades vary in length from 6 to 16 inches, and even longer, and may be used either in hand frames or in specially designed frames moved by power.

The hand frame illustrated in Fig. 43 (*a*) is an adjustable frame, in which blades from 8 to 12 inches long can be used. The clamps holding the blade may be turned so that the blade will cut up or down in the plane of the frame, or at right angles to the frame. Thus it is seen that the blade

may be turned to face any one of four ways. Fig. 43 (*b*) shows the blade set at right angles to the plane of the frame.

Hack-saw blades are so hard that they cannot be filed, and are so cheap that when dull they may be thrown away. They are made with about 25 teeth per inch for sawing thin metal, and with about 14 teeth for other work. The blades used in hand frames are about $\frac{25}{1000}$ inch thick and $\frac{1}{2}$ inch wide, an 8-inch or 10-inch blade being the most economical. The operator should lift the frame up slightly when

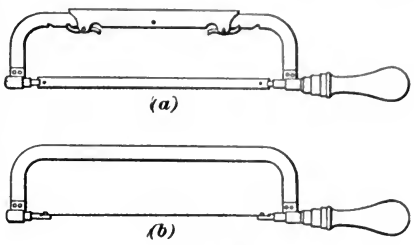

FIG. 43

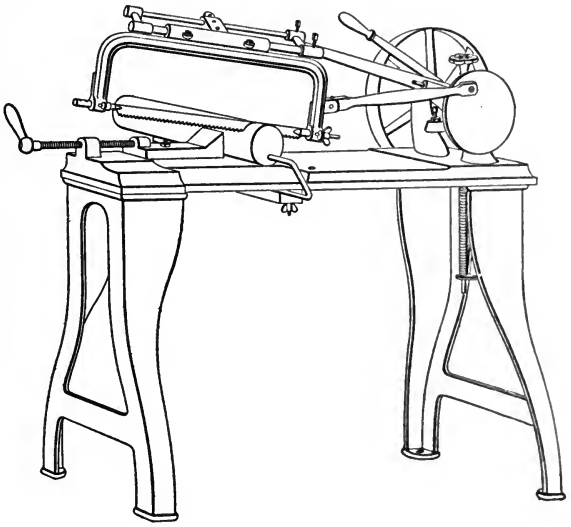

FIG. 44

drawing the saw back, or the back stroke, if the work is in contact with the teeth, will be much more destructive to the teeth than the forward stroke.

62. Power Hack Saw.—For cutting off bar stock, a **power hack saw**, like that shown in Fig. 44, will be found exceedingly useful. Such a machine is usually provided with a vise for holding the stock to be cut off, and is so constructed that the machine will stop when the piece has been sawed through. Provision is also made for lifting the saw on its back stroke so as to save the teeth. The blades are generally 12 inches or more in length, and will cut stock up to 4 inches in diameter. The power hack saw is especially useful for cutting off tool steel.

IRON FORGING

MANUFACTURE OF IRON

MAKING CAST IRON

1. Iron Ore.—Any iron-bearing mineral from which the metal can be abstracted at a profit is **iron ore.** This definition excludes many ores containing a large percentage of iron because they also contain a large percentage of impurities; and it will admit, on the other hand, many ores that carry a low percentage of iron, but few or no injurious elements. Iron is never found chemically pure in nature, except perhaps, in some meteorites, where it is a mere curiosity, while the limited supply from this source makes it of no practical value. Chemically pure iron is soft and ductile, has a high melting point, and can be forged and welded.

The *rich ores* of iron contain from 60 to 68 per cent. of metallic iron, while those low in iron, called *lean ores*, may contain only from 30 to 40 per cent. In the United States, very few furnaces are running on ore containing less than 50 per cent. of iron. The impurities, which consist of oxygen, silicon, phosphorus, lime, sulphur, magnesia, aluminum, manganese, titanium, etc., occur in very small amounts.

2. Blast Furnace.—Iron is reduced from its ores by fusing them, together with lime, in a **blast furnace;** the lime acts as a **flux,** and is obtained by the use of limestone and marble. A blast furnace is usually an iron shell lined with some refractory substance, such as firebrick or fireclay, and on the outside looks like a tall stack or chimney. Into

Copyrighted by International Textbook Company. Entered at Stationers' Hall, London

it alternate layers of fuel, flux, and iron ore are thrown, the fuel fired, and the whole mass raised to a high temperature by means of an air blast, to hasten the combustion. The blast furnace is continuous in its operation; the ore, flux, and fuel are charged into the top of the furnace, and the ore and flux are melted by the intense heat and tapped out at the bottom. The amounts of fuel, limestone, and ore must be carefully calculated in order that the ore may be properly reduced. The furnace is so operated that the impurities in the fuel and ore may combine with the flux in the form of **slag**, which is lighter than the iron and floats on its surface. It is tapped from a hole at the side of the furnace, above the hearth or bottom, while the iron is tapped from a hole at the front and bottom of the furnace and flows into iron or sand molds where it cools. The form of cast iron obtained by this process is called **pig iron.**

3. Nature and Composition of Cast Iron.—The best and purest grades of **cast iron** are made in blast furnaces using charcoal for fuel. This is due to the fact that charcoal does not contain sulphur, while coal and coke do; and also because the ash is of such a nature that the impurities pass into the slag rather than into the iron. Cast iron, as made by blast furnaces, generally contains from 92 to 96 per cent. of metallic iron. The other 4 to 8 per cent. consists chiefly of impurities in the form of carbon, silicon, manganese, phosphorus, and sulphur, from 2 to 6 per cent. being carbon. While it is true that the five elements mentioned are impurities in iron, the first four are really the elements that make cast iron of commercial value. Cast iron has a granular or crystalline structure, and is hard and brittle. It can be cast in almost any desired shape, but cannot be forged or drawn into wire.

MAKING WROUGHT IRON

PUDDLING PROCESS

4. Nature and Composition.—**Wrought iron** has a fibrous structure and can be forged and welded. It is practically free from carbon, silicon, and the other elements contained in cast iron. It may be made direct from the ore, but the greater part is made from cast iron by the removal of its carbon, silicon, and other impurities, by the puddling process.

5. Hand Puddling.—In the manufacture of wrought iron by hand puddling, the cast iron obtained from the blast

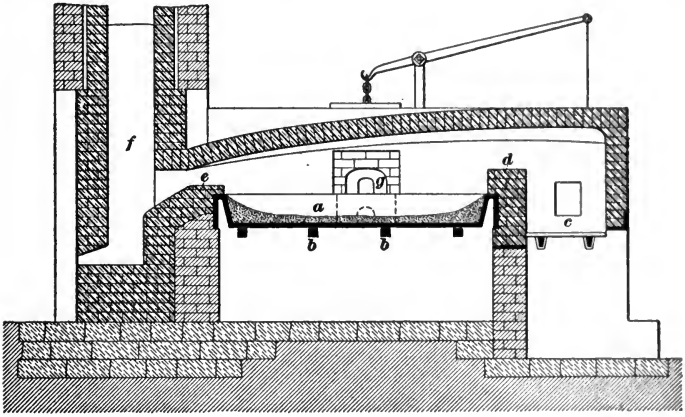

FIG. 1

furnace is melted on the hearth of an **open-hearth furnace,** which is ordinarily of the form shown in Fig. 1. The hearth *a* is usually made of cast-iron plates carried on brick walls or on iron supports *b*, *b*. It is generally about 5 or 6 feet in length and 4 feet in width opposite the charging door, and is lined with a refractory substance. The roof is a firebrick arch. The heat is obtained ordinarily from a bituminous-coal fire in the fireplace *c*. The area of the grate varies from 6 to 10 square feet or more, depending on the

character of the iron, the draft, and the fuel. Between the grate and the hearth is a firebrick wall *d*, called a **bridge wall**, that extends across the furnace and is of sufficient height to keep the fuel from getting over on the hearth, and the molten iron from running over on the fuel. In many cases, the bottom and sides of the furnace are hollow, and have water circulating through them to keep them cool. Another bridge wall *e*, called the **altar**, prevents the metal from overflowing into the flue leading to the chimney *f*. In the middle of the door *g* in the side of the hearth is an opening large enough to admit the puddler's **rabble**; this is a long iron bar with which the melting charge of metal and slag is stirred by the workman.

The furnace is charged with 500 pounds of pig iron, which is carefully placed on the bed of the furnace or is broken up and piled around the sides. When the charge is melted, the puddler stirs the fluid mass with his rabble, while his assistant changes the draft and the fire to suit the different stages of the process. The impurities of the iron are taken up by the molten flux or burned out. In about an hour, pasty masses of metal begin to appear, which the puddler works into spongy balls weighing from 60 to 80 pounds each. These are well worked at a high temperature to get rid of the slag, and finally removed from the furnace and hammered or squeezed into the form called a **bloom**. The bloom is then taken to the rolling mill, and rolled into various commercial forms.

6. Mechanical Puddling.—In the various **puddling machines** in use the flame is led from the firebox to a hearth of varying form and construction, moved by machinery. In some forms this hearth is barrel-shaped and turns on a horizontal axis. In other forms it is circular, and is so arranged that it may be mounted on a vertical shaft and rotated; but in one form the hearth slants at an angle of from 10° to 15° from the horizontal. In most cases the metal is further stirred or mixed by broad-bladed **rabbles** operated by the workmen or by machinery.

The advantages claimed for these machines are that greater masses of metal may be handled and that there is greater uniformity of the product, together with a saving of fuel, time, and expense. Hand puddling is also injurious to the health of the workmen.

7. Effects of Reheating Wrought Iron.—It has been found by experiment that the strength of the puddled iron, as rolled into the bar, is increased each time it is heated and worked, up to about the sixth working. Each heating and working beyond this point decreases the strength, until at about the twelfth it will be as weak or weaker than after the first rolling from the puddled bar. Careless heating may, however, injure the iron in one or two heats.

FORGING OPERATIONS

DEFINITIONS

8. The operation of shaping or forming metal by hammering or pressing is termed **forging.**

The process of stretching a piece of metal in one or more directions, either by hammering or by pressure, is called **drawing.** In the blacksmith shop, the term always indicates a decrease in the area of cross-section of the piece, with a corresponding increase in its length or breadth.

By the term **bending** is usually meant the turning or forming of the iron in such a manner as to deflect it from a straight line. The finished product may be a curved or an angular piece.

In the operation of **twisting** an iron bar, the fibers are wound around each other spirally. No change in the direction of the axis of the piece takes place. Fig. 11 shows a hook that has the straight portion between the eye and the hook twisted.

Upsetting is the operation of increasing the thickness of a piece of iron by shortening it.

Forming refers particularly to the process of giving a desired form or shape to a piece of metal by hammering, or by means of specially formed dies between which or into which the metal is pressed or hammered.

Welding is the process of uniting two pieces of metal into one solid piece by heating them to a welding heat and hammering or pressing them together. For wrought iron, a white heat is necessary to soften the metal so that it will weld.

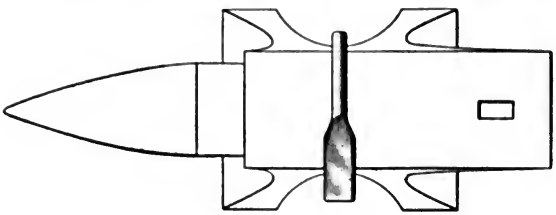

FIG. 2

EXAMPLES OF FORGING

DRAWING

9. Position of Work on Anvil.—In all work on the anvil, it must be remembered that the anvil is crowned cross-

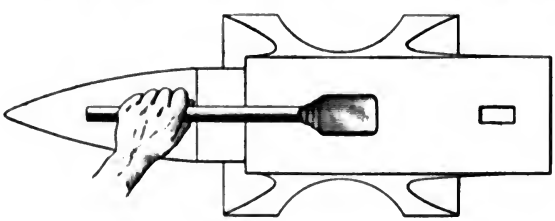

FIG. 3

wise, and the metal will therefore be drawn most readily in a direction at right angles to the length of the anvil. If the piece is to be drawn lengthwise, it should be laid across the anvil as shown in Fig. 2; if it is to be drawn sidewise, it

should be held as shown in Fig. 3. The drawing may be done by holding the work across the horn of the anvil; the sharper curve causes the metal to flow more freely than on the face, but it is more liable to cause irregularities in the shape. When the work is to be straightened, it should be laid lengthwise, as shown in Fig. 3, because the anvil is straight in this direction.

FIG. 4

10. Round Drawing.—Drawing a bar of round iron out to a smaller diameter is one of the easiest forms of drawing. The portion to be drawn is marked with soapstone, and then heated carefully to the highest temperature it will stand without injury. It is then taken from the fire, quickly brought to the anvil, and hammered rapidly. The diameter may be reduced by two methods, first by keeping it as nearly round as possible during the entire process, and, second, by

drawing it to a square, then to a round. By the first method, the piece is turned a little after each blow and kept as nearly round as possible, and finished with the hand hammer or with a swage, as shown in Fig. 4. A second heat is sometimes necessary. It is well to turn the piece from left to right and then from right to left, because turning it always in the same direction is liable to twist the fibers. By this method the iron is very liable to split. To avoid this, the second method is often preferred, the piece being drawn from a round to a square, then to an octagon, and finally finished to a round of the required diameter.

11. Square Drawing.—In round drawing, the iron is turned a very little at a time, so as to bring all points under

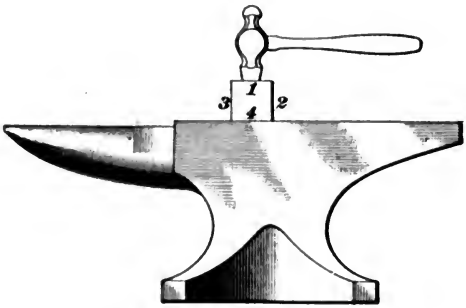

FIG. 5

the hammer. In square drawing, however, the iron must always be turned either one-quarter or half way around. This requires some practice, as the least variation in the amount of the turn will bring the piece out of square. In drawing a square bar down to one having a smaller section of the same shape, the sides of the original bar help to guide the hand in making the proper amount of turn, but if a round bar is to be drawn down to one square in section, the amount of turn must be entirely governed by the hand and the eye.

In drawing down a square bar to a square of smaller size, the piece is heated and brought to the anvil, holding one of the sides down flat and striking blows squarely on the top

side, drawing it down along its entire length. It is then revolved one-quarter of a turn and the top side hammered until the piece is about square; the opposite side is then turned up and hammered; and finally the last side is brought under the hammer. The figures in Fig. 5 show the order in which the sides are brought under the hammer. This method of turning the work lessens the liability of getting the piece twisted, or diamond-shaped, as shown in Fig. 6.

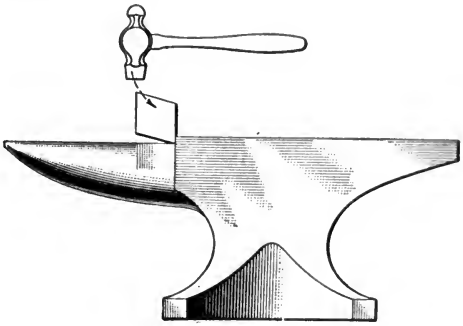

FIG. 6

If it becomes twisted in this way, it should be held as in Fig. 6 and struck in the direction shown.

If desired, the piece can be finished under the flatter; in this case it is held on the anvil lengthwise and the flatter held against the upper face parallel to the face of the anvil, while the helper strikes a few light blows.

BENDING

12. The character of the bending operations done on an anvil depends on the shape of the section of the piece to be worked—whether it is round, square, hexagonal, oblong, or of other shape—and on the size of the section. For instance, the operation of bending a square bar is very different from the operation of bending a wide but thin plate, having the same area of cross-section, to the same shape.

Small sizes of rods may be bent easily by placing them in the hardie hole, or the pritchel hole, of the anvil to the point

at which the bend is desired, and bending the end over. Some pieces may be bent by doing the work entirely over the face of the anvil, whereas other pieces are bent over both the horn and the face of the anvil at various stages of the operation.

13. An Eye Hanger.—Suppose that it is desired to form the eye pipe hanger shown in Fig. 7, to support a pipe $1\frac{1}{4}$ inches in diameter; the eye is to be bent to the form shown, but not welded. A rod $\frac{1}{2}$ inch in diameter and slightly over 2 feet long is taken and marked at a distance of 6 inches from one end; this end is then heated to a bright red up to the point marked. The cool end of the rod is grasped with the left hand, and the marked point on the heated end is placed over the farther edge of the face of the anvil, or over the horn near its point. The heated end, which projects, is then bent down so that it points nearly at right angles to the rest of the rod. The rod is then turned on its axis half way around so that the heated end points up instead of down. The very end of the heated part is then brought down so that it projects slightly over the end of the horn, as shown in Fig. 8, and the end of the rod is bent gradually by light hammer blows into a ring as shown in Fig. 7.

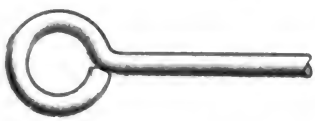

FIG. 7

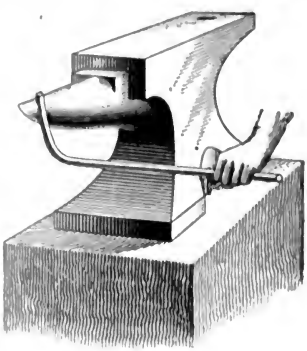

FIG. 8

14. Forging a Staple.—If a staple, like the one shown in Fig. 9, is to be made out of a piece of $\frac{1}{4}$-inch round iron, the required length is first marked off on the bar. On this, a distance of 1 inch from the end is marked off, and the end is heated and drawn to a square point $1\frac{3}{4}$ inches long. The piece is then cut off from the bar, using the hardie, as shown

in Fig. 10, and making the piece $5\frac{1}{2}$ inches long, over all. The other end is marked and drawn out to a point the same as the first, keeping both squares in line. The piece will now be about $6\frac{1}{4}$ inches long, $\frac{1}{4}$ inch round in the middle, with a square tapering point $1\frac{3}{4}$ inches long at each end. The center of the piece is then marked and heated, and the piece bent over the horn of the anvil to the shape shown in Fig. 9, making the distance between the two straight, parallel ends $\frac{3}{4}$ inch. In bending over the horn of the anvil, the piece is held against the large part of the horn and bent

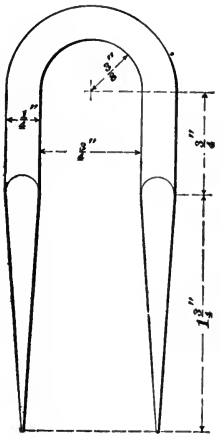

FIG. 9

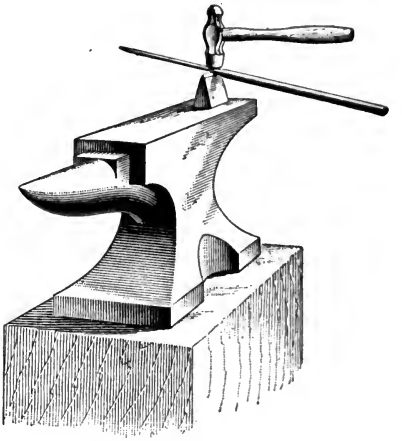

FIG. 10

by light hammer blows, turning it to keep it round; then while hammering it the piece is gradually brought toward the point of the horn. When bent, the curve should be uniform and the two ends of the same length. If it is warped or twisted, it is flattened on the anvil with the hammer or the flatter.

TWISTING

15. Forging a Gate Hook.—If a hook, like the one shown in Fig. 11, is to be made of $\frac{1}{2}$-inch square iron, the operation will be about as follows: It will take about 4 inches

of stock to make the hook, and this length is marked off from the end. It is then heated and drawn out until it calipers $\frac{3}{8}$ inch square, when it will be about $5\frac{1}{2}$ inches long. A length of $1\frac{3}{4}$ inches is then marked off from the end and drawn to a round of $\frac{5}{16}$ inch diameter, keeping one side straight, as shown at *d*, Fig. 12.

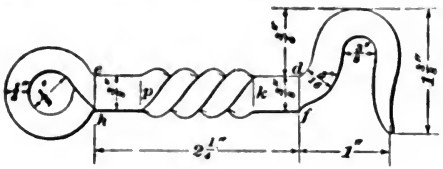

Fig. 11

The shoulder, or offset, *f* is formed over the edge of the anvil, as shown in Fig. 13. By striking the upper edge with the hammer, as shown, the top will remain straight at *d*,

Fig. 12

after which it can be finished with the swage to make it perfectly round. A length of $\frac{3}{4}$ inch is then marked off on the $\frac{5}{16}$-inch end and the point drawn down round, as indicated by the dotted lines, Fig. 12. The entire piece is then cut off from the bar and the other end of the $\frac{3}{8}$-inch square marked off, making the distance between the shoulders $2\frac{3}{4}$ inches, and drawn to $\frac{1}{4}$ inch round, as shown in Fig. 12, keeping it straight at *e* and forming a shoulder at *h*.

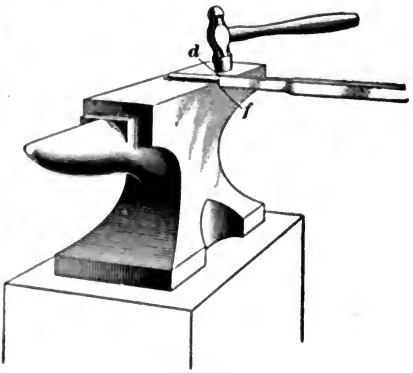

Fig. 13

The $\frac{1}{4}$-inch round part is bent into a ring over the horn and the $\frac{5}{16}$-inch round end is bent into the hook, as shown in Fig. 15. In bending the hook and the ring, the

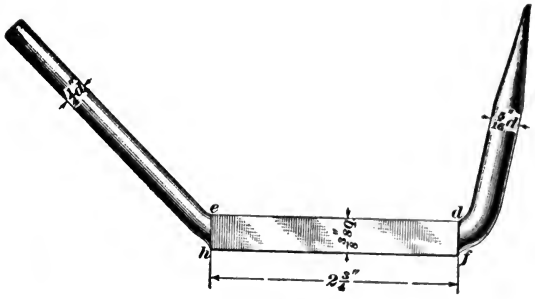

FIG. 14

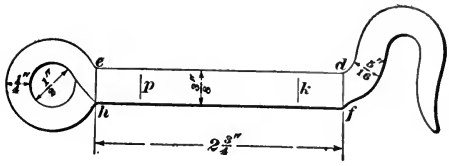

FIG. 15

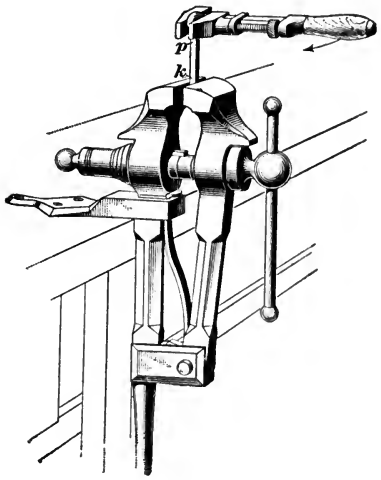

FIG. 16

piece is held with one round end projecting over the farther edge of the anvil, and this projecting end is bent back until it has the shape shown in Fig. 14. The other end is then bent in this way, and the ring and hook formed over the horn of the anvil by light hammer blows.

16. Twisting the Hook.—Lengths of $\frac{1}{2}$ inch are now marked off on the square part from the shoulders *f* and *h*, giving the points *k* and *p*, Fig. 15. The portion between *k* and *p* is then brought to an even red heat and twisted. To do this, the piece is clamped vertically in the vise by the hook end, as shown in Fig. 16, with the point *k* at the top edge of the vise jaw, and a monkeywrench is fitted to the ring end, immediately above the point *p*. The wrench is then given one complete turn, twisting the square part as shown in Fig. 11. If it has become bent, it may be straightened by hammering it between two blocks of wood on the anvil so as to avoid battering the sharp edges.

UPSETTING

17. Ramming.—When it is desired to **upset**, or thicken, a portion of a piece of iron, this part is heated to a bright red, the rest of the bar being kept cool by pouring water over it with the sprinkler. When sufficiently heated, the piece is brought to the anvil and upset, either by ramming or with the hammer.

If the bar is from 2 to 3 feet long and is to be upset at the end, the heated end of the bar is rammed against the face of the anvil, as shown in Fig. 17, or on a block of iron bedded in the ground, called a **bumping block.** The entire energy of the blow is concentrated at the hot end of the rod, and drives the particles of the iron near the end together in the direction of the blow; this bulges out the iron where it is hot.

18. Upsetting With a Hammer.—If the bar is short, it may be brought to the anvil with a pair of tongs, as shown in Fig. 18, and held vertically on the anvil with the hot end up and the heated end hammered, or with the hot end down

and the blows struck on top of the cold end. By the second method, the heated end is constantly in contact with the cold face of the anvil and will therefore cool very rapidly; the result is that the bar will not spread so much on the end.

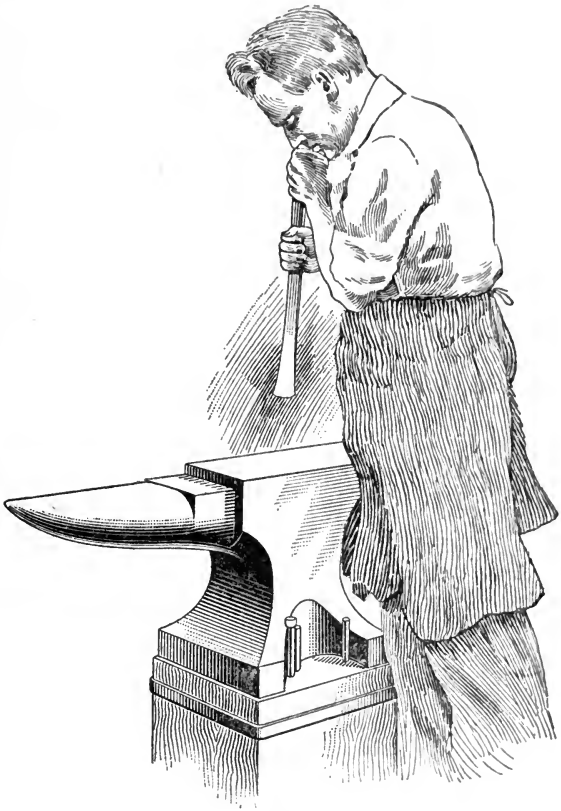

FIG. 17

but the bulge will extend up a little farther than by the other method. In the same manner an upset may be made at any point on the bar.

19. Precautions in Upsetting.—If, in upsetting a bar, it begins to bend after a few blows have been struck, the

piece must be straightened at once, for any blows struck endwise on a bent bar will not have much effect in upsetting it, but will only bend the bar more and make the straightening harder. For upsetting, a good heat is required; in fact, it is well to make the final heat a welding heat, because upsetting often separates some of the fibers, and by taking a welding

FIG. 18

heat over the piece and hammering it on the sides a little, all loose fibers will be welded together again.

MAKING A BOLT

20. Square-Headed Bolt.—If a $\frac{1}{2}$-inch bolt, Fig. 19, is to be made out of a $\frac{1}{2}$-inch round rod, the end of the rod is heated and upset. When enough metal has been upset to form the head, the enlarged end is reheated and the cold

end of the bar passed through a suitable hole in the swage block, or through the heading tool. If the latter is used, it is laid on the anvil so that the body of the bolt passes

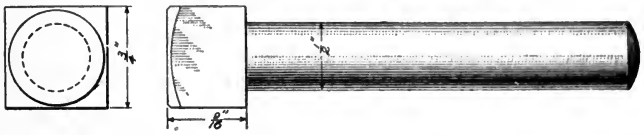

FIG. 19

through the hardie hole. The upset end is then hammered down against the swage block or heading tool, as shown in Fig. 20, until the head is $\frac{9}{16}$ inch thick, and the piece driven out of the heading tool. The head is then shaped

FIG. 20

square with a hand hammer. If, after the sides of the head are properly formed, it is found that the head is longer than it should be, it is laid on a piece of soft iron placed on the

anvil and the extra length cut off with the hot cutter. After this, the bolt is put back into the heading tool and the head is finished with the hammer; the bolt is then cut off to the desired length, and the **burrs**, or rough edges, on the end are hammered down.

21. Bolt Header.—When a large number of bolts are to be made, it is well to use a **bolt header**, one form of which is shown in Fig. 21. The frame is of cast iron and quite heavy; steel dies are provided for bolts of different sizes, usually varying by $\frac{1}{8}$ inch, although occasionally $\frac{7}{16}$-inch and $\frac{9}{16}$-inch dies are used. The length of the bolt is determined by a steel block *a* provided with notches that engage a series of notches on the frame of the machine. This block may be set for any length of bolt within its range. The iron may be cut to length so as to leave the right amount of stock to make the head without any trimming. The dies are closed to grip the iron by means of the foot treadle *b* and the head formed with a hammer. The dies fit in the top of the machine at *c*, the two dies forming a heading tool.

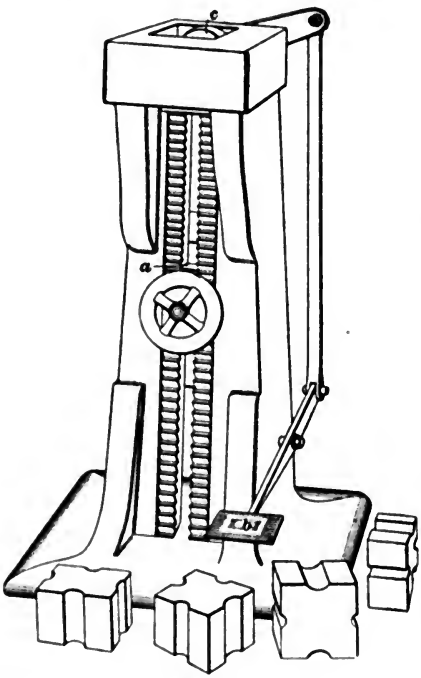

FIG. 21

22. T-Headed Planer Bolt.—The method of making a T-headed planer bolt is as follows: Suppose that the bolt is

to be made from a $\frac{5}{8}$-inch round rod; the size and form of the head for the bolt are shown in Fig. 22, indicated by the dimensions and letters of the top and side views. The points *a b c d* of the head in the top view correspond to the points *a' b' c' d'* in the side view. First the shape of the head is made oblong in cross-section, as indicated in the top view by the letters *a e c f*, and $\frac{3}{8}$ inch thick. The end of the rod is then heated and upset; but the upsetting is not a continuous operation; it must alternate with hammer work to keep the sides *a f* and *e c* parallel. For the latter, the bolt is laid flat on the face of the anvil with first one side *e c* placed uppermost to receive the blows of the hammer, and then the opposite side. Also, the head is frequently moved beyond the edge of the anvil and is struck with the hammer for the purpose of both forming and upsetting it. This process of upsetting and forming is continued until the amount of metal upset is sufficient to form the desired head. This is then heated and the cold end of the rod is passed through the right size of hole in a swage block, or through a heading tool, and the inside face of the head is worked to shape. But this latter cannot be done at one operation, for the side faces, shown in the top view at *a e* and *c f*, must be brought to shape with the hammer. The final shape of the head shown in the top view by *a e c f* is obtained by dressing the side faces *a e*, *e c*, *c f*, and *f a* and the end face of the head with the hammer, and by finishing the inside face on the swage or heading tool. The lengths *e b* and *f d*, each equal to $\frac{1}{4}$ inch, are marked off with a soapstone pencil or a hand chisel and the portions of the head *a e b* and *c f d* are then cut off with the hot cutter. The angles *b a d* and *b c d* are approximately equal to 65°, and hence if the bevel is used it may be set to this angle and used to test the angles between the faces. It is not desirable that the edges at *a* and *c* be made sharp. The head of the

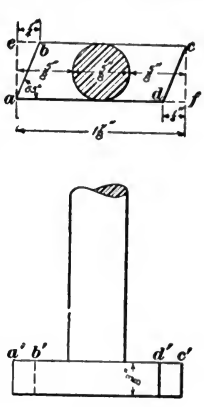

FIG. 22

bolt is made thin so that it will break off before the pressure becomes great enough to injure the lip of the T slot on the cast-iron planer table. The head of the bolt is given the shape shown in Fig. 22 so that it will not turn in the T slot, when the nut is tightened. After the head is properly formed, the bolt is cut to the required length.

23. Making a Hexagonal Bolt Head.—If it is desired to form a hexagonal, or six-sided, head on a $\frac{3}{4}$-inch bolt of

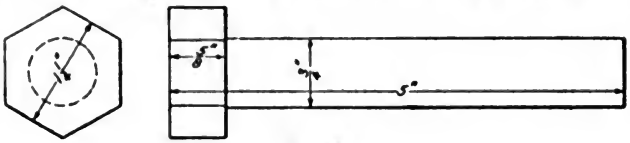

FIG. 23

the dimensions shown in Fig. 23, the end of a $\frac{3}{4}$-inch round rod is heated and upset. When enough metal has been upset to form the head, the cold end of the bar is passed through a suitable hole in the swage block or the heading tool, and the inside face of the head is surfaced around the shank of the bolt as described for a square-headed bolt.

The head is then shaped in a three-sided groove of proper size, which is usually formed on the surface of the swage block. The swage block is placed so that the groove is horizontal and the opening is on top. The inside face of the head is trued up, as before, and the side faces are again touched up with the swage, after which the head, if it is too long, is marked for the proper thickness and the end cut off with the hot cutter. A hand hammer is also used in the final dressing of the head. A cup-shaped swage may be used for finishing the top of the head into the rounded shape shown in Fig. 24.

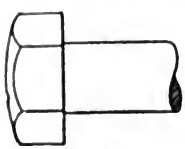

FIG. 24

The bolt is finally cut to the proper length, which in this case is 5 inches, and the burrs on the edges dressed down with the hammer.

24. Stock for Bolts.—Iron bolts can be made from bars of the same diameter as the diameter of the bolt, the

heads being made by welding on rings or by upsetting the stock. Steel bolts must be made from bars as large or larger than the head, and the body drawn down to the required size.

MAKING AN ANGLE

25. If an **angle**, like the one shown in Fig. 25, is to be made from a bar of $\frac{3}{8}$-inch square iron, it will be necessary

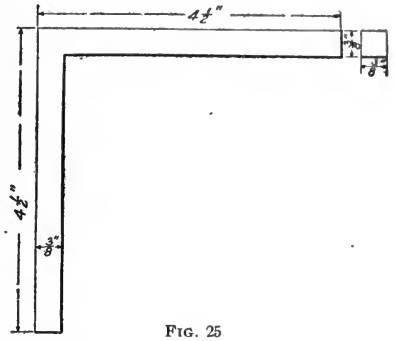

FIG. 25

to upset the bar in the center to give the additional stock required for the corner. About $8\frac{3}{4}$ inches of stock is cut off, and the center heated and upset to $\frac{5}{8}$ inch diameter, as shown in Fig. 26. The piece is then bent at right angles in the center by sticking one end through the hardie hole down to

FIG. 26

the heated center and bending the other end toward the anvil, as shown in Fig. 27. To make the corner sharp, the piece is held on the face of the anvil, as shown in Fig. 28, and the angle made true by hammering. When striking the blows the hammer is drawn as shown by the arrow in Fig. 28; this draws the iron toward the corner. The piece is finished $\frac{3}{8}$ inch square with the flatter, and the ends cut to an equal length on the hardie, and then squared with the hammer.

FIG. 27

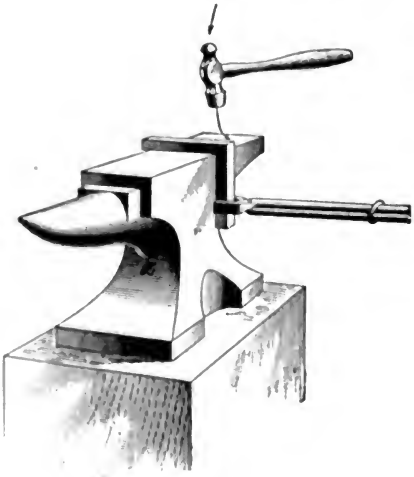

FIG. 28

MAKING A SMALL CHAIN HOOK

26. If the chain hook, shown in Fig. 29, is to be made from a bar of $\frac{1}{2}$-inch round iron, about $6\frac{1}{2}$ inches of stock is required. The end will have to be upset to provide stock for the eye of the hook. To provide enough stock to make the eye, a length of $1\frac{1}{2}$ inches is marked off from the end of a bar, and the end heated and upset as shown in Fig. 18, until the original $1\frac{1}{2}$ inch length is shortened to 1 inch. The piece is then flattened down to $\frac{3}{8}$ inch in thickness, making the upset portion circular and about 1 inch in diameter, as shown in Fig. 30.

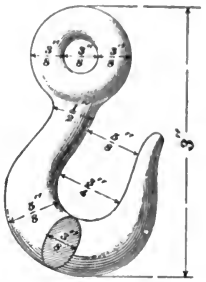

FIG. 29

27. Forming the Eye.—In flattening the upset portion down to $\frac{3}{8}$ inch in thickness, it should be spread sidewise as much as possible. If it draws out in length, it may be upset a little in a swage or heading tool, or it may be upset on the edge of the anvil as shown in Fig. 31. When the head has been formed, it is heated, and a $\frac{1}{4}$-inch hole put through with the punch, which should be kept cold by dipping it in water before and after

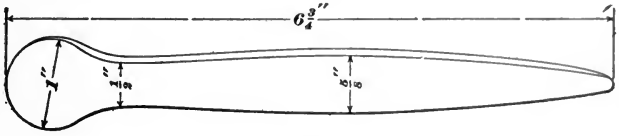

FIG. 30

it is used. After the hole is started, the punch is held aside to see whether it is in the center; if it is, the punch is driven down well and the piece is turned over and punched from the other side, where the iron shows a black circular spot. The core is driven out through the hardie hole or through the pritchel hole. Some smiths put a little coal or coke dust into the hole after it has been started and then finish the hole by driving the punch on top of it; this

keeps the point of the punch cool and prevents it from sticking in the hole.

When the hole has been punched, the eye of the hook is raised to a welding heat and worked over to weld up any parted fibers or split places. For this, the punch is put into the hole and left there while hammering the eye. The punch is driven down occasionally to keep it tight; this will spread the hole to about $\frac{3}{8}$ inch in diameter.

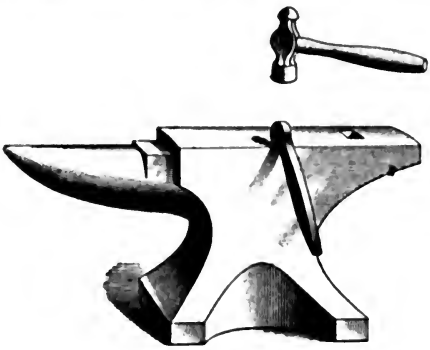

FIG. 31

Another method of making the eye is to take a sufficient length of material to form the eye of the hook by bending the end of the rod around a pin, a mandrel, or the end of the horn of the anvil. The eye end of the rod is first scarfed as shown at *a*, Fig. 32 (*a*), and is bent around to form the eye as shown in Fig. 32 (*b*), after which the end is welded. These latter

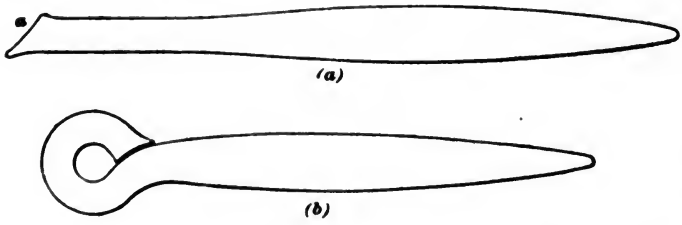

FIG. 32

operations will be described in detail under separate headings in connection with welding operations.

28. **Bending the Hook.**—The corners are next rounded and the hook bent into the required shape by holding it on the horn of the anvil and striking it with a light hammer.

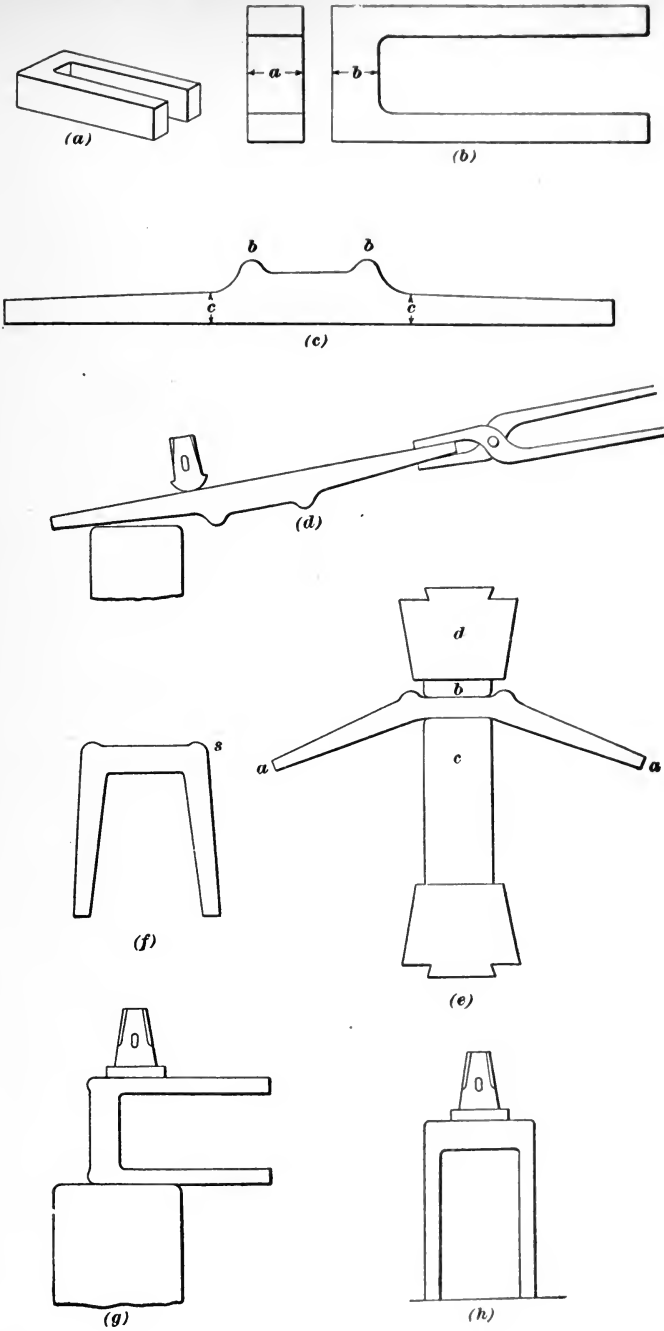

FIG. 33

FORGING ROD STRAPS

29. Forging a Strap to Size.—To make a rod strap of the form shown in Fig. 33 (*a*), select stock of the width shown at *a* in Fig. 33 (*b*), and thicker than *b* by a sufficient amount to form the corners *b* in Fig. 33 (*c*). Draw this stock to the form shown in Fig. 33 (*c*), leaving the sides slightly thicker at *c* than they will be in the finished strap, as they will draw in the bending, and being careful that the hammer leaves no ridges, which would tend to start cracks, sometimes called **gaulds**, in the corners, which become

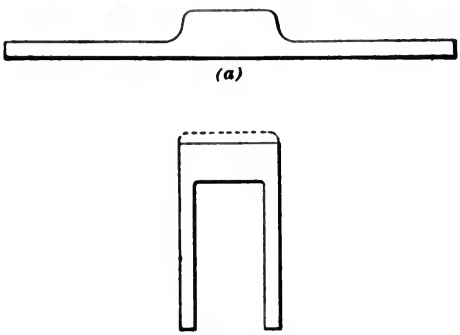

FIG. 34

deeper as the work progresses. Next, take the stock in the tongs, and, holding it as shown in Fig. 33 (*d*), proceed to bend it, using a large fuller to start the bend, as by starting in this way the iron is not cramped at the corners. Any ridges left by the hammer may be taken out by the fuller when starting the bend.

After the bends have been started as shown in Fig. 33 (*d*), place the stock in clamps, or hold it in the steam hammer in the manner shown in Fig. 33 (*e*). This may be done by lowering the upper die *d* on the upper one of two blocks *b* and *c*, between which the stock is held, and holding it firmly by means of the steam pressure. Next, have two helpers, one on each side, strike simultaneously on the ends until the piece has the form shown in Fig. 33 (*f*). Take a heat on

one corner by placing the side *s* down in the fire; and by using the flatter, bring the side to the shape shown in Fig. 33 (*g*), and repeat this on the other corner and side. It will be necessary during this operation to use the flatter on the strap, which is held as shown in Fig. 33 (*h*), in order to make the end of the proper shape.

30. Forging a Strap and Trimming to Size. Another way to make this strap is to use wider stock and forge it to the form shown in Fig. 34 (*a*). The sides are then bent in the same manner as in the operation just described, and the strap brought to shape as before. The end is formed, however, by cutting off the excess of stock that has been allowed there, as shown by the dotted line in Fig. 34 (*b*).

WELDING

CONDITIONS GOVERNING WELDING

31. Object of Welding.—It is often necessary to join together two pieces of iron, or the ends of the same piece, so that the joint will form one solid mass. In such cases, the pieces are **welded** together.

Each of the pieces treated thus far has been made of a single piece of iron, but very frequently it would be inconvenient or impracticable to make the forging out of one piece. If so, several pieces are welded together, and the forging is said to be **built up**.

32. Oxidation of Iron.—If a piece of iron is heated in air, it will absorb oxygen from the air, thus forming a **scale** of oxide of iron on the surface. The hotter the iron, the more rapidly the scale will form. It does not adhere to the iron very firmly, and surfaces coated with it cannot be welded. It is therefore very important to guard against oxidation of the surface of the iron if a weld is to be made, because the scale of oxide will lie between the two surfaces of the iron and prevent their coming in contact; and under these conditions it will not squeeze out if the pieces

are pressed and hammered together. Two methods are employed to guard against the oxidation; namely, the use of a *reducing fire* in heating, and the use of suitable *fluxes*. By both of these methods the hot iron is prevented from coming in contact with the oxygen of the air.

33. Reducing Fire.—A **reducing fire** is one in which all oxygen is consumed in the combustion, so that the gases coming in contact with the iron do not contain any oxygen that can unite with the iron. Under this condition no oxidation can take place, and the surface of the iron will remain clean. This condition is obtained in a closed fire by having a thick bed of fire for the air to pass through before coming in contact with the iron and by maintaining a moderate blast. If, however, the blast passes through a thin bed of fuel or if more air is blown through than the fire needs, the unused oxygen will oxidize the iron. Therefore, a thick fire should always be maintained, and the blast regulated so as to supply just enough air and not too much.

34. Fluxes.—The other method for preventing the oxidation is to coat the surface of the iron with some substance that will exclude the air. It must, of course, contain no oxygen that will unite with the iron. It must be fluid at a heat below the welding heat of iron and still not become so fluid at the welding heat that it will run off and leave the iron exposed as before.

Substances used for preventing the formation of scale on the iron when being heated for welding are called **fluxes**. Strictly speaking, most of them form a fusible mixture with the iron oxide, which offers the desired protection to the iron, but they use up some of the iron to make this mixture, therefore wasting it. This mixture, however, is so liquid that it will squeeze out from between the surfaces being welded, thus leaving clean surfaces of iron to be welded together. There are many kinds of fluxes. Some of these consist of a mixture of several substances. The most common flux for wrought iron is clean, sharp sand; this fuses readily on the surface of the iron and sticks to it during the

heat, thus excluding the air. A very good flux for iron, but one that cannot be used on steel because it tends to reduce the carbon, can be made by mixing 2 ounces of calcined borax and 1 ounce of sal ammoniac. **Calcined borax** is a good flux for steel. It is made by heating borax in an iron pot until the water is driven off. The mass is then cooled and pulverized. Calcined borax is also called *borax glass*.

Sand and borax are very good fluxes for iron alone; but it is well to have a flux that can be used when welding steel to iron. A very good flux for welding steel to iron is made of potter's clay, wet with strong brine. This is dried and powdered and used like sand or borax. Another good flux that is not too fluid, and does not injure steel, is made by mixing 3 ounces of carbonate of potash, also called pearlash, with 1 ounce of dry clay. This is heated in an iron pot, and when hot, 4 ounces of calcined borax is added. When cold, it is powdered, and is then ready for use.

CLASSIFICATION OF WELDS

35. Names of Welds.—The different kinds of welds are named according to the manner in which the pieces are put

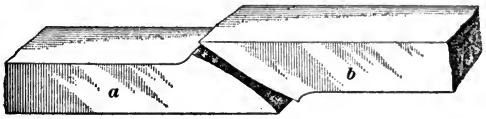

FIG. 35

together; the principal ones are *scarf welds*, *butt welds*, *lap welds*, *cleft welds*, and *jump welds*. The selection of the weld to use depends on the form of the piece, the forces it is to resist, and the equipment for making the weld.

36. Scarf Welding.—In the scarf weld, the two pieces are *scarfed;* that is, they are thinned down, as shown in the pieces *a* and *b*, Fig. 35. If the iron is of uniform thickness, it is first upset at the point at which the weld is to be made in order to gain a little in thickness; after this, it is scarfed.

To do this, the upset end is thinned down, generally with the peen of the hammer, drawing it out thin at the point and crowding the metal back at the stock by drawing the hammer as shown at *a*, Fig. 36. Sometimes the end of a flat bar, after being upset, is tapered or scarfed by using a fuller, as shown in Fig. 37. This is a quick and effective way of doing it. The faces to be welded should be rounded and made higher at the center, as shown at *b*, Fig. 36, so that the pieces first come in contact at this point, in order to give the slag and impurities an opportunity to squeeze out as the weld is being closed.

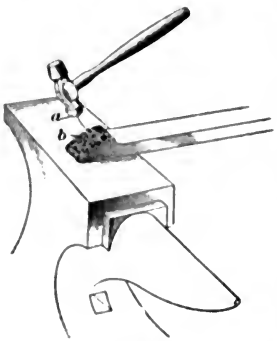

FIG. 36

The scarfed ends of both pieces having been brought to a welding heat, and fluxed if necessary, the weld is made as follows: Holding the shorter piece with the tongs in the right hand and the longer piece in the left, the scarfed faces of both being downwards in the fire, draw both out of the fire and give each a sharp rap on the edge of the anvil to remove any coal or other substance that may adhere to the heated surfaces. Next bring the shorter piece to the position on the anvil shown at *a*, Fig. 38 (*a*), and follow with the longer piece, bringing it to the position of the dotted outline *b*; then, without losing contact between the longer piece and anvil, bring *b* down on *a*, as shown in Fig. 38 (*b*). The

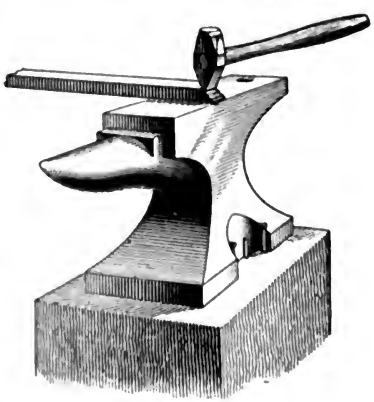
FIG. 37

contact of *b* with the anvil assists in controlling its movements. When *b* is placed on *a*, a slight pressure on it will hold both in relative positions while the tongs are dropped and the right hand relieved so that the hammer may be taken and a light blow delivered in the direction of the arrow *c*, Fig. 38 (*b*). As soon as the pieces stick together, the ends of the scarf may be brought down by delivering a few light blows on one side, and then the piece turned over and the other side struck in the same manner before it has cooled below the welding heat. If the scarfs are made too long, it increases the surface to be welded and entails useless labor.

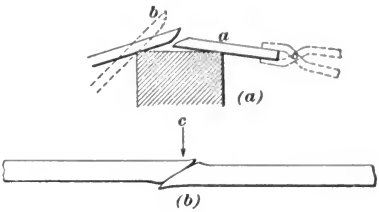

FIG. 38

37. Butt Welding.—In the butt weld shown in Fig. 39, the two pieces are generally upset a little at first, and then welded together as shown. They are hammered on the end to bring them together, and as this tends to upset the pieces still more, they are drawn out to the required size after the weld has been made. In preparing the ends, the surfaces to be welded are made convex, as in the scarf weld, in order to allow the slag to work out.

FIG. 39

38. Lap Welding. In the lap weld, the two pieces are laid together face to face, as shown in Fig. 40, and welded. As the faces are not rounded, the hammering is started at the center, gradually working toward the edges in order to work out all the slag. If the edges are welded up and any slag remains between the faces, it will keep the metal from uniting in the center.

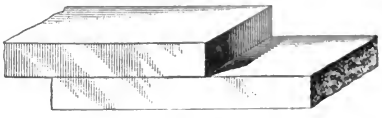
FIG. 40

39. Cleft Welding.—When a weld is required to stand considerable strain, such as is caused by prying and bending, the pieces are generally joined by the **cleft weld**, shown in Fig. 41. One of the pieces *a* is upset to gain width and thickness, and is then split open on the end, as shown at *a*, and the two cheeks *c* and *d* spread apart; the other piece is then scarfed on both edges, as shown at *b*. In welding, the pieces are first hammered on end to get the weld to stick, and then hammered on the edges to close the weld. The pieces should be so formed that the weld will start at the point *f* and the slag be forced out as the sides *c* and *d* are closed down.

FIG. 41

40. Jump Welding.—The jump weld is really a special form of cleft weld. If it is desired to weld a bar to a flat plate, a conical depression is made in the plate as shown at *a*, Fig. 42. The bar to be welded is pointed as shown at *b*. The two conical surfaces must be so formed that the parts will come together at the point first, so that any slag will be squeezed out as the piece is driven, or jumped, into its seat. This form of weld is frequently used for quite large work, the bar being driven to place under the steam hammer.

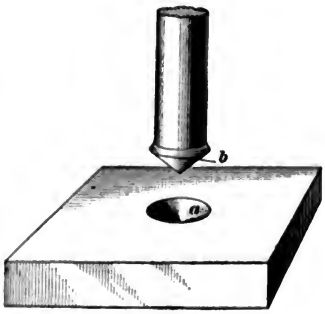

FIG. 42

41. Building Up.—It is frequently inconvenient or impracticable to make a forging out of a single piece because of the shape it is to have. In such a case the forging is built up; that is, it is made of a number of pieces that are forged to their approximate shapes and then welded together. Fig. 43 shows

a built-up forging in which the welds are designated by the letters *a*, *a*.

42. Fagoting.—The operation of welding a quantity of wrought iron in small pieces, as scrap iron into a slab or billet, is called **fagoting**, and sometimes **shingling.**

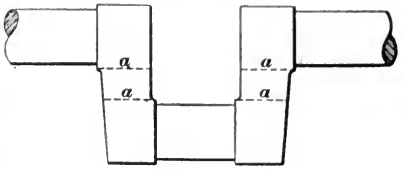

FIG. 43

In fagoting, a flat piece of iron is laid on a board and the pieces of scrap iron are piled on top of it, making a firm rectangular pile with large pieces around the outside and small pieces in the center; or, the flat piece on the board may be omitted, as shown in Fig. 44. The

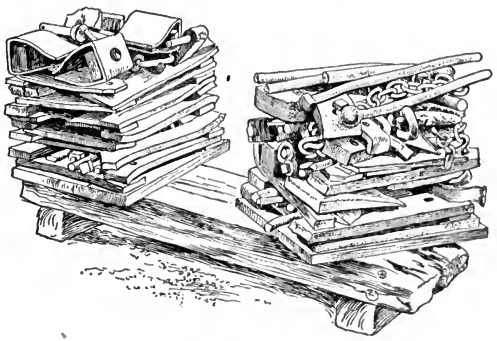

FIG. 44

pile is then heated in a furnace and welded under a steam, or other suitable, hammer.

WORK INVOLVING SCARF WELDS

43. Making a Corner Plate.—In order to illustrate some of the applications of the scarf weld, a few simple cases, in addition to the one already given, involving the various principles of welding in general and of scarf welding in particular, will be described.

If a corner plate, like the one shown in Fig. 45 (*a*), is to be made, two pieces of $\frac{3}{8}'' \times 1\frac{1}{4}''$ iron, each about 15 inches long, are heated at one end, keeping one of them near the edge of the fire so as to heat it more slowly than the other. When one is hot enough, it is taken from the fire, and the end upset and then scarfed, as shown in Fig. 45 (*b*). This is done by striking it, and at the same time drawing the hammer toward the hand, as shown in Fig. 36, in order to draw the metal that way. The other piece

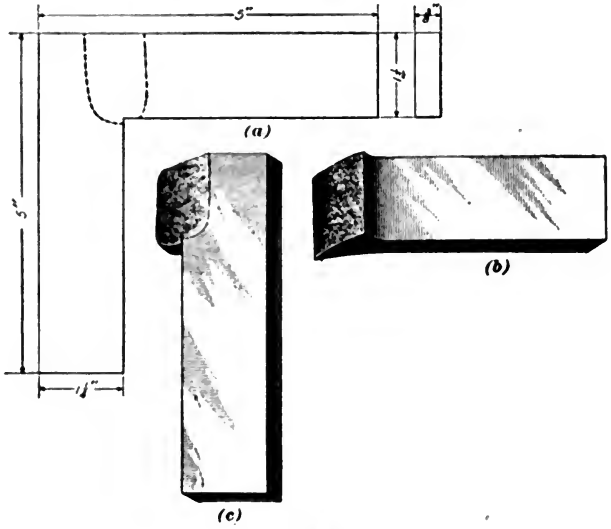

FIG. 45

is then taken from the fire, upset at the end, and one edge scarfed as shown in Fig. 45 (*c*). When both pieces are ready, they are put into the fire and raised to a bright-red heat, turning them occasionally to get the heat even. They are then dipped into the flux or the flux is sprinkled over their surfaces and they are then returned to the fire and raised to a good white heat on the *scarfs*. The pieces are turned occasionally to prevent the slag and flux from dropping off. As soon as both pieces begin to approach a welding heat, the blast is turned on stronger in order to

raise the final heat rapidly; and if it is thought necessary, a little more flux is thrown on the pieces while in the fire. When hot enough, the pieces are brought to the anvil and put together. In doing this, the pieces are held against the edges of the anvil, somewhat as in Fig. 38, care being taken not to touch the cold anvil with the heated portion. When the scarfs are in line, the pieces are brought down flush on the anvil, having the piece in the right hand below the one in the left hand, so that the left-hand piece will be able to hold the other down while the right hand does the hammering. A few rapid blows will make the pieces stick; they are then turned over to bring the other face under the hammer.

The form of the scarf should always be such that the centers of the surfaces to be welded come in contact first; this will cause the slag to squeeze out as the pieces are hammered together. As soon as the pieces cool to a cherry red, they are reheated and the weld finished. When black hot, both sides of the piece are struck against the horn to make sure that the weld is well made. A good weld will not open on being bent and then straightened. If the weld is good, the corner is tried with a try-square and finished perfectly sharp and square, on the edge of the anvil, as shown in Fig. 45 (*a*). The ends are then cut off, making each arm 5 inches on the long edge. When cold, it will be seen that the weld is perfectly tight, the slag having all been squeezed out in hammering.

44. Making a T Plate.—A T plate like the one shown in Fig. 46 (*a*) can be made in nearly the same way as the piece described in Art. **43.** The cross-piece *a* is upset in the center and the edge is scarfed as shown in Fig. 46 (*b*), and the piece *b* is upset and scarfed on one end, as in the corner plate. When both pieces have been prepared, they are heated, fluxed, and welded, as described in the construction of the corner plate.

45. Making a Band Ring.—In making a band ring, like the one shown in Fig. 47 (*a*), a piece of $\frac{3}{8}'' \times 1\frac{1}{4}''$ iron,

12 inches long, is upset at both ends. The ends are scarfed on opposite sides, as shown at *a* and *b*, Fig. 47 (*b*), and the iron is bent into the form of the desired ring. To do this,

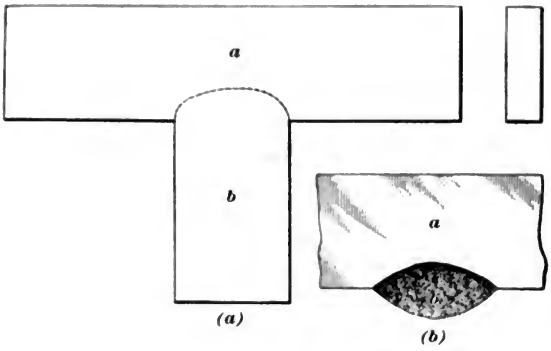

FIG. 46

the iron is heated and then laid across the horn of the anvil and projecting beyond it. The projecting end is hammered and bent around, as shown in Fig. 47 (*c*), until the scarfed

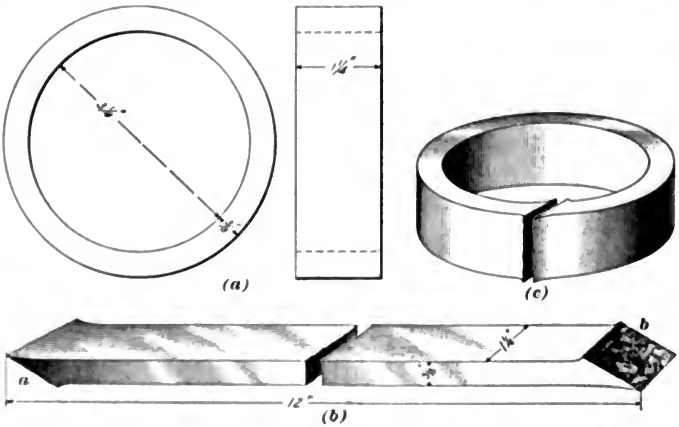

FIG. 47

faces are in position for welding, but about $\frac{1}{4}$ inch apart. The ends are next heated and fluxed, and then raised to a welding heat. To weld the ring, it is brought to the anvil

and slipped over the horn, with the scarfed ends on the upper side of the horn. A few rapid blows with the hammer will make the weld, after which the ring is trued up so as to make it round and to make the iron of the required width and thickness throughout. This is done over the horn of the anvil.

A very good way of bending the iron for a band ring, or a similar piece, is to use a piece of $\frac{1}{2}$-inch or $\frac{3}{4}$-inch round iron bent into **U** shape, as shown in Fig. 48 (*a*). This piece is clamped in the vise with the open end up, and the iron to be bent is laid between the projecting ends and bent by pressing the end sidewise, as shown in Fig. 48 (*b*), or a fork that has a square shank to fit the hardie hole of the anvil, as shown in Fig. 48 (*c*), may be used. The iron may be bent either hot or cold. If the iron is thin, it is preferable to bend it cold, as hot bending is liable to kink it. If thin iron is bent hot over the horn of the anvil, the jarring from the hammer blows is also apt to make the projecting end sag and lose its shape.

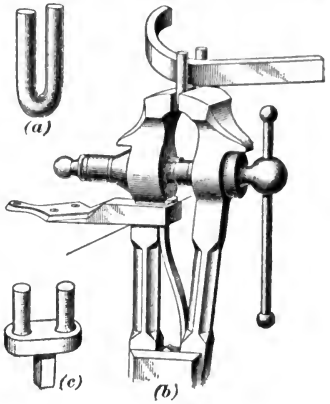

FIG. 48

46. Length of Stock for a Ring.—The following rule will be found convenient for determining the amount of stock required for either band or round rings.

Rule.—*Add together the inside diameter of the ring and the thickness of the stock and multiply the sum by* $3\frac{1}{7}$.

EXAMPLE.—What is the length of stock necessary for a ring of 2-inch round iron having an inside diameter of 12 inches?

SOLUTION.— $12 + 2 = 14$; $14 \times 3\frac{1}{7} = 44$ in. Ans.

To this must be added a small amount for upsetting and scarfing; in this case from $\frac{1}{8}$ to $\frac{1}{4}$ in. should be allowed.

47. Making a Ring Hook.—A ring hook of the form shown in Fig. 49 (*a*) may be scarf-welded. It also shows, in its

construction, a method of splitting stock for branch pieces that is valuable in smithing operations. On a piece of iron

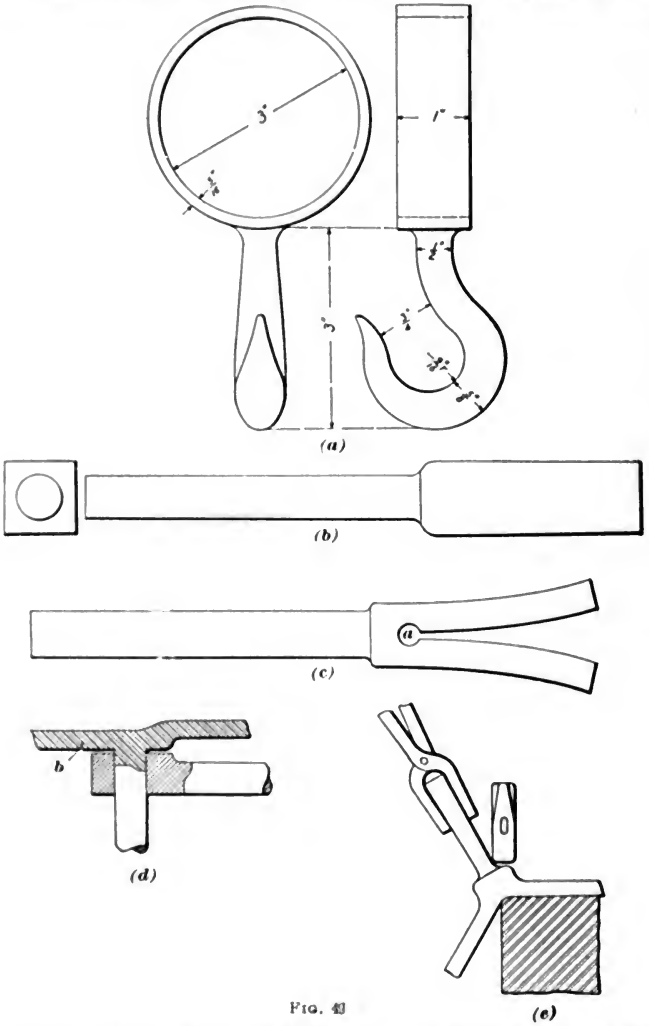

FIG. 40

of good quality, such as Norway iron, $\frac{7}{8}$ inch square and 5 inches long, mark off with a center punch 2 inches from

one end and draw this piece out to 5 inches, leaving the stock of the form shown in Fig. 49 (*b*). Next, the hole shown at *a* in Fig. 49 (*c*) is made with a punch, the stock split out to the end, and the branches bent apart, as shown. The shank is then placed in a heading tool and the branches bent out, as shown in Fig. 49 (*d*). During this part of the work, great care must be taken to prevent cracks from starting in the corners, as shown at *b* in Fig. 49 (*d*). When the iron has closed around cracks started in this way, they are known as **cold shuts,** and the piece is liable to be dangerously weak where they occur. They may be avoided by removing the piece from the heading tool when the branches have been partially bent out, placing it over the round corner of

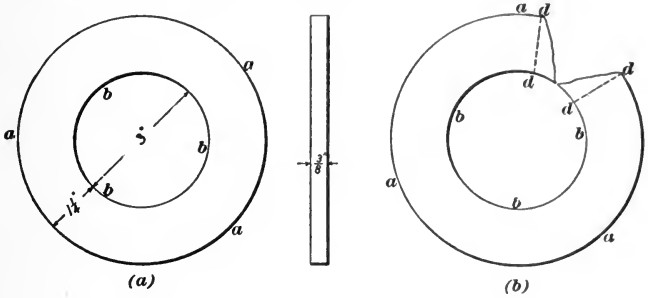

Fig. 50

the anvil, and using a large fuller or a set hammer in the manner indicated in Fig. 49 (*e*). The branches are drawn out to the proper dimensions, scarfed, bent to the ring form, and welded as in the case of the band ring. The piece is held in the tongs by the ring while the hook is being shaped. The finished piece should be sound, show no scarf or weld marks, and agree with the dimensions of the drawing.

48. Making a Flat Ring.—In making a flat ring, as shown in Fig. 50 (*a*), a piece of $\frac{3}{8}'' \times 1\frac{1}{4}''$ flat iron 14 inches long, is cut off and heated, and the end farthest from the tongs is bent edgewise over the horn of the anvil. As the circumference of the outside circle *a a a* of the ring is considerably greater than the circumference of the inner

circle *b b b*, the iron will be upset along the inner edge and stretched along the outer edge by the bending. This will make the iron thicker than $\frac{3}{8}$ inch at the inner edge and thinner along the outer; the iron will also buckle and twist when being bent. By hammering it flat on the anvil, using the flatter if desired, the iron can be brought back to an even thickness; however, it should not be allowed to get far out of size, and its width and thickness should be frequently tried with the calipers. When bent, the iron will have the form shown in Fig. 50 (*b*); the corners are then cut off as shown by the dotted lines *d, d*, the ends scarfed and the iron bent on the anvil, as shown in Fig. 51, until the scarfs overlap, their inner surfaces remaining about $\frac{1}{4}$ inch apart, as shown in Fig. 52. The heat is then raised, the weld made, and the ring finished with the hammer.

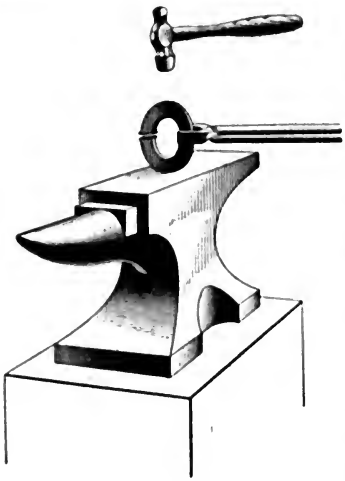

FIG. 51

49. Making a Small Chain.—In making a chain like the one shown in Fig. 53 (*a*), six distances of $3\frac{1}{2}$ inches each are marked off on a bar of $\frac{1}{4}$-inch round iron, 29 inches long. These marks may be put on with a soapstone pencil or the rod may be nicked on the hardie. One end of the rod is then heated, scarfed, and bent to the shape shown in Fig. 53 (*b*); it is then cut off obliquely at the first mark, as shown by the line *a a'*; this makes only a single scarf necessary on each weld. This link is then heated, fluxed, and welded, and bent into the proper shape. By the time the first link is finished, the next section of the rod is hot

FIG. 52

enough to scarf and bend into shape. The rod being cut off at an angle makes it easy to scarf, but the hammer must be drawn, as shown in Fig. 36, in order to crowd up the iron at the large end of the scarf. When the second link is ready to weld, it is fluxed and the heat raised. When at a welding heat, the link is brought to the anvil, the first link caught up in it, and the weld made, or the previous link may be caught up in it after fluxing and before putting it into the fire for the final heat. In this way, five links can be made, the heat for scarfing and bending a link being raised while the previous link is being welded. The sixth link joins the other five links to the chain hook. After the

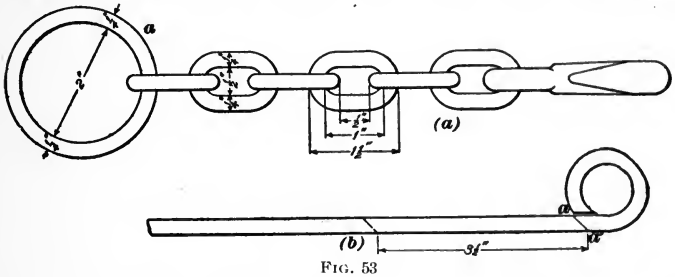

FIG. 53

sixth link is approximately bent into shape, the fifth link of the chain and the hook are caught up by it; its ends are then brought into proper position and are heated and welded. It is often of advantage to both the maker and user to have the hook link made slightly longer than the others.

When the six links of the chain have been made, the ring shown at *a*, Fig. 53 (*a*), can be made of the remaining 7 or 8 inches of the rod. The iron is scarfed at one end and bent into shape, after which the first link is picked up in the ring, which is then heated and welded. The chain can be finished by brushing it with a stiff brush and some sand and water, after which it is heated to a dull red and dipped into linseed oil or rubbed with a piece of oily waste, guarding carefully against fire in case the oil ignites.

50. Making a Pair of Tongs.—To make a pair of blacksmith's tongs for holding flat iron, such as is shown in

Fig. 54, a bar of $\frac{3}{4}$-inch square iron, not more than 2 feet long, is marked at 2 inches from the end and heated. When hot, the marked end is flattened to a thickness of $\frac{7}{16}$ inch, leaving the shoulder, as shown at *a*, Fig. 55 (*a*), on one side. This may be done by holding the iron so that the marked edge is on the edge of the anvil and by flattening

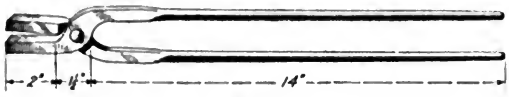

Fig. 54

the end with the hammer as shown. The piece is again heated and placed on the anvil, as shown in Fig. 55 (*b*), and flattened for about 3 inches in length. It is then cut from the bar and the other end *c g* of the piece is offset, as shown at *c*, Fig. 55 (*c*), and flattened for about 3 inches in length. The end *g d* is then drawn down to $\frac{1}{2}$-inch round, as is shown in Fig. 55 (*c*). The end *d* may be left a little

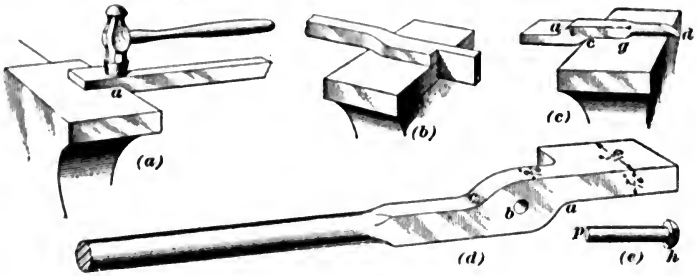

Fig. 55

larger than $\frac{1}{2}$ inch, and then scarfed for welding. Another piece is then made like this, and a $\frac{1}{2}$-inch round rod 12 inches long is welded to each to form the handles. A $\frac{3}{8}$-inch hole is then punched through one of the pieces, as shown at *b*, Fig. 55 (*d*). The two parts of the tongs are now held together and the hole marked in the second piece by punching it through the hole already made. The first piece is then laid aside and the hole punched through the other one.

The pin or rivet, shown in Fig. 55 (*e*), that is to hold the two parts together is made by upsetting a $\frac{3}{8}$-inch rod at one

end and forming it into a head. It is then cut from the bar, making it the proper length, and tried in the tongs to make sure that it fits. The pin is then put into the fire and heated on the end *p*. When hot, the finished head *h* is cooled by being dipped into the water, but the end *p* is left hot. The pin is then put back into the fire and heated on the end. When hot, it is put through the two holes and the tongs finished by riveting the end of the pin. It frequently happens that the rivet bends in the holes; this makes the tongs tight, but the jaws will not stay parallel. In such a case the rivet is driven out while it is still hot and another one made.

The fuller may be used to good advantage in making the tongs. The bar having been cut down part way with the hot cutter, the material may be worked out to approximately the correct form with the fuller. Sometimes, it is well to *take a heat over* the work; this consists of going over the piece, when it is at a white heat, with a light hand hammer. In this way, the fibers that have become separated are rewelded and the forging improved.

In making tongs, it is well to inspect the parts very closely before putting them together. A good way to detect flaws and defects is to heat the suspected part to a dull red; this will show all defects such as cracks, seams, poor welds, etc. The welds, angles, offsets in the jaws, and the metal near the punched holes are very liable to show defects. If the defects cannot be remedied, a new part must be made.

WORK INVOLVING BUTT WELDS

51. Knuckle-Joint Strap.—To make a knuckle-joint strap, shown in Fig. 56 (*a*), a short bar of stock is taken, slightly wider than one-half the width *a* of the strap, and of the thickness shown at *b*. The notch *c*, Fig. 56 (*b*), is made with the fuller, and the end of the bar drawn to the form shown by the dotted lines. Next, this end of the bar is cut off at such a place as will give the piece shown in Fig. 56 (*c*), and the face hollowed as shown at *d*. A second piece of the same form is then made, except that the face *d* is convex

instead of concave. There will now be two pieces, as shown in Fig. 56 (*d*); these are to be welded together, the excess of width having been given, that they might close slightly at *f*, Fig. 56 (*d*), during this operation.

To weld them together, the two pieces are heated at the same time. When at a welding heat, the pieces are placed on the anvil in the relative position shown in Fig. 56 (*d*), and the weld made with light blows of sledge hammers, or they may be placed between the dies of a power hammer and welded with light blows, care being taken that the blows do not draw the sides too close to each other. Too heavy blows

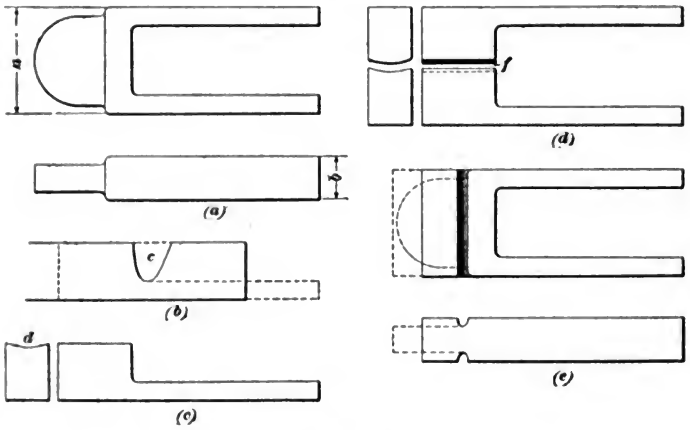

FIG. 56

are liable, also, to spread the edges of the weld and weaken it. The piece should be turned on its side, after the faces are welded, and the sides closed before the welding heat is lost. It must be remembered that the weld is due to the fluid condition of the metal at the surfaces that are joined, and the blows delivered should have only force enough to bring the surfaces entirely together. After the weld is made, the grooves shown at Fig. 56 (*c*) are made with the fuller, and the end drawn out as shown by the dotted lines. The end is then cut to the curved form shown in Fig. 56 (*a*) by the use of a hot cutter, and this end finished on the anvil.

WORK INVOLVING LAP WELDS

52. Making a Bolt Head by Welding on a Ring.—In this example, it is required to form the head of the bolt by welding a ring around the end of a round rod $1\frac{1}{4}$ inches in diameter. Fig. 57 (*a*) shows the form and dimensions of the bolt to be made. The ring should be made from a piece of bar iron 1 inch wide and $\frac{1}{2}$ inch thick. The length of the stock required may be found by the rule already given. The diameter of the ring, $1\frac{1}{4}$ inches, and the thickness of one side, $\frac{1}{2}$ inch, are added together, giving $1\frac{3}{4}$ inches. Then, $1\frac{3}{4} \times 3\frac{1}{7} = \frac{7}{4} \times \frac{22}{7} = 5\frac{1}{2}$ inches, which is the length of

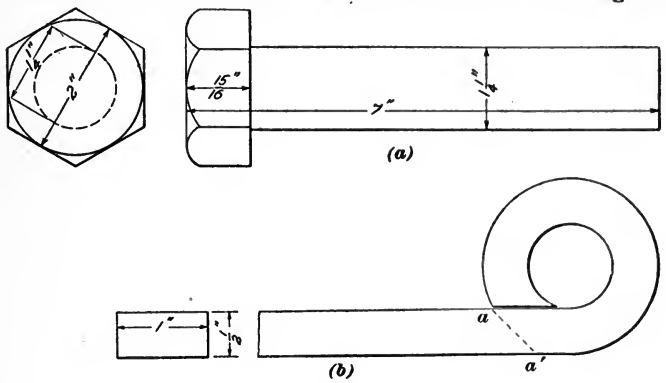

FIG. 57

stock required for the head. The end of this piece is upset slightly and scarfed, and then bent around, as shown in Fig. 57 (*b*); it is then cut from the bar by an oblique cut *a a'*. The ring and the end of the rod are then heated and fluxed for welding. When taken from the fire, the end of the rod is quickly placed in the ring and they are welded together by light hammer blows on the side of the ring. For this operation, the position of the rod is horizontal, and it is turned so that the hammer may strike different portions of the side of the ring at each blow. Care should be taken that the ends of the ring are welded, as well as that the ring is welded to the rod.

Another heat is taken and the head is dressed more nearly to form with the hammer, and the bolt is placed in the heading tool or the swage block to bring the under side and the top of the head roughly to plane surfaces. The head is then laid in the groove of the swage block, and the swage used to form the sides of hexagonal head.

PRACTICAL EXAMPLES OF FORGING

53. Forging a Rocker-Arm From One Piece.—For this purpose, round stock is taken that is large enough in diameter to give, when flattened, the dimension at *a*, Fig. 58 (*a*),

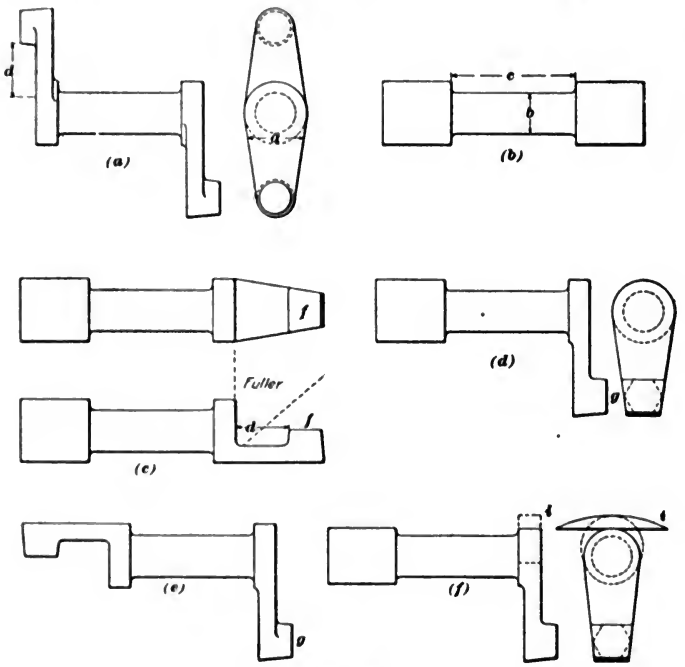

FIG. 58

and drawn to the form shown in Fig. 58 (*b*); this will require great care, for there is danger that the dimension *c* may be made too great, or, if this is right, that the dimension *b*

may be too small. Enough of one end is flattened to form the arm, and drawn to the form shown in Fig. 58 (*c*). The dimension *d*, Fig. 58 (*c*), is made to correspond to *d*, Fig. 58 (*a*). In flattening this piece, the work is done with the hammer, the side toward which the stock is drawn being made as true and flat as possible from the shoulder to the end, and the recess at *d* formed by the use of the fuller; this leaves the stock *f* on the end, from which to form the boss. Next, the piece is clamped firmly near one shoulder and the flattened portion bent down, making the whole piece of the form shown in Fig. 58 (*d*). This may be done by clamping the piece between the hammer dies and driving down the arm with sledge hammers. The boss is rounded as shown at *g*, Fig. 58 (*e*), by first shaping it to the form shown by the dotted lines at *g*, Fig. 58 (*d*), and then rounding it to form the boss. The portion outside the shoulder on the other end of the piece is treated in the same manner, or both ends may be flattened and notched first, and then bent. Rocker-shafts are also forged by welding both arms to the shaft.

54. Forging a Rocker-Arm With Welded Shoulder. When it is not considered desirable to use stock that is large enough to form a shoulder of the required size, the shoulder should be made in the manner indicated in Fig. 58 (*f*). The rocker-arm is made from the stock at hand, leaving it too small at the shoulders and on the arms near the shoulders. A separate piece of stock is drawn to the form shown at *i*, Fig. 58 (*f*), and bent to fit closely around the shoulder that has been formed, as shown by the dotted lines. A welding heat is then taken in one shoulder, and that side is welded; this is repeated on the other side. After both shoulders have been treated in this way, the whole piece is gone over carefully and dressed to shape.

55. Locomotive Reverse Shaft.—The method of forging a locomotive reverse shaft varies in different shops, but a good way of doing it is shown in Figs. 59 and 60. The shaft is first heated at *a* where one of the arms is to be welded, and enlarged by upsetting, which is accomplished by swinging

a heavy suspended steel ram *b*, Fig. 61, against its end, the shaft being supported in a special fixture or anvil *c*, Fig. 59, made for the purpose. Similar heats are taken at other points where arms are to be welded. The arms are previously forged, usually under a drop hammer. The end of each arm is split, and each end is drawn out, as shown at *e* and *f*, Fig. 60 (*b*). Fig. 60 (*c*) also shows some of the details of the form of the arms and shaft before welding. The small arm *a*, Fig. 60 (*a*), is first welded to the shaft, after which one of the link supporting

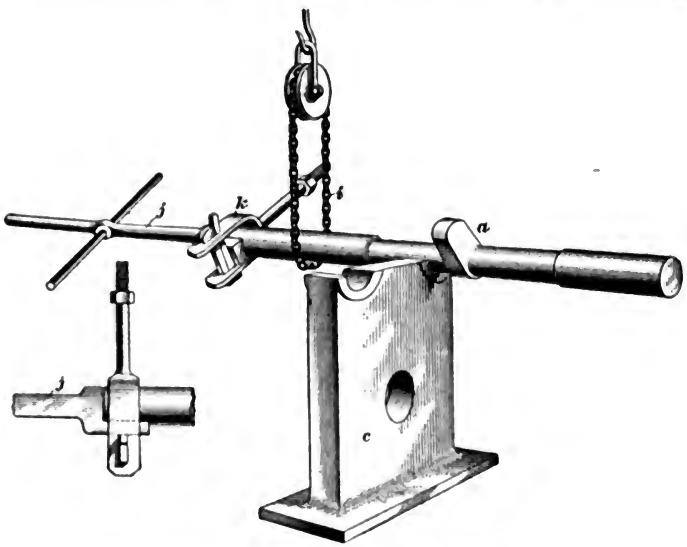

FIG. 59

arms *d* is welded on in the following manner: The shaft is heated in one fire and the end of the arm in another; when they are both at the proper heat, they are brought out, the shaft is dropped into the crotch of the special support *c*, and the arm placed on it. A few sharp blows on the upper end of the arm commence the weld at the center, and blows at *e* and *f*, Fig. 60 (*b*), complete it, a swage being used to finish the fillets about the end of the arm. The other arm *h* is then welded on in the same way.

The long arm *g* on the end of the shaft is sometimes made by first welding on a short piece, after which the shaft is taken to the machine shop for machining, and is then returned to the smith shop, and the remainder of this long arm welded on. The object of this method is to overcome the difficulty of turning the shaft in the lathe with the long arm on it.

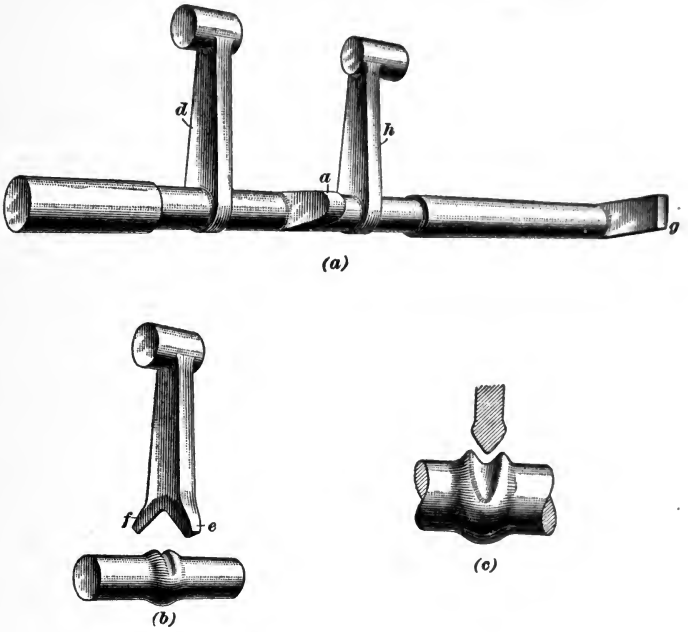

FIG 60

During the welding the weight of the shaft is partially supported by the chain *i*, Fig. 59, hanging from a chain block on a swinging crane. The shaft is handled by the fixture *j*, which is fastened to it by means of a clamp *k* provided with a gib and key. The end of the clamp *k* has a thread and nut for the purpose of attaching weights to counterbalance the arms *d* and *h*. The main forge is located at *l*, Fig. 61. The forge in which the arms are heated is located at *m*. A cast-iron plate *n*, about 4 feet by $7\frac{1}{2}$ feet in size, planed on the top and the edges, strongly ribbed on the bottom, and

provided at one side with a pair of centers, adjustable lengthwise in a groove, is used to test the straightness of the shaft. There is a space of 3 or 4 feet between the fixture *c* and the plate *n*.

56. Locomotive Valve Yoke.—There are several methods of making a locomotive valve yoke. One of the

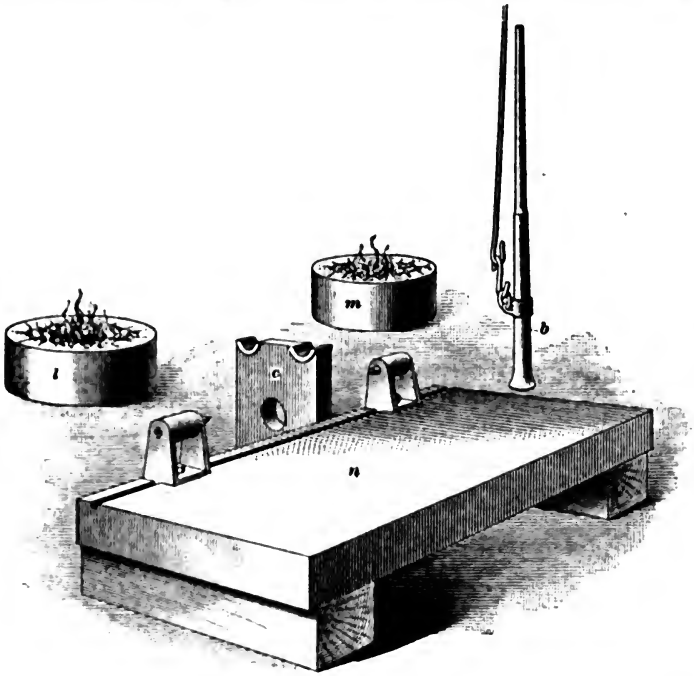

FIG. 61

best is to take a piece of square hammered iron, as shown by the dotted lines in Fig. 62, and draw one end as shown at *a*. The other end is split, opened out, and each end drawn out as shown at *b* and *c*, after which the two ends are split and bent down as shown at *d* and *e*. Another piece of iron is also drawn out to the proper size and length and bent as shown at *f*, with its ends properly scarfed for welding. First one side is welded and then the other, when it only

remains to give the yoke the necessary finish. The clamp *g* is used to hold the parts in place while making the first weld at *e*.

57. Forging a Wrought-Iron Rudder Frame.—Many rudder frames of late years have been cast in open-hearth steel, in one piece, but owing to the possibility of hidden blow-holes, or invisible cracks in the corners, a wrought-iron frame is sometimes preferred. Fig. 63 shows such a frame in which it was necessary to make 19 welds, the location and order of which are shown by the figures, the dotted lines showing the character of each weld. Number *19* was made by welding in a diamond-shaped piece, or **glut**, which has the fiber of the iron lengthwise in the finished work.

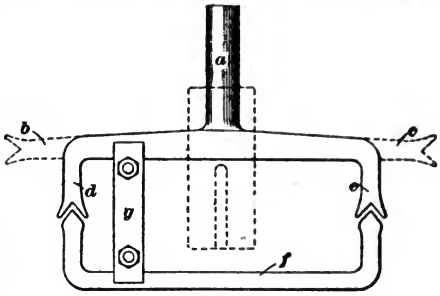

FIG. 62

The main piece, which in this case is 23 feet long, is shown at *a*. Eight inches of the upper end is square, below which

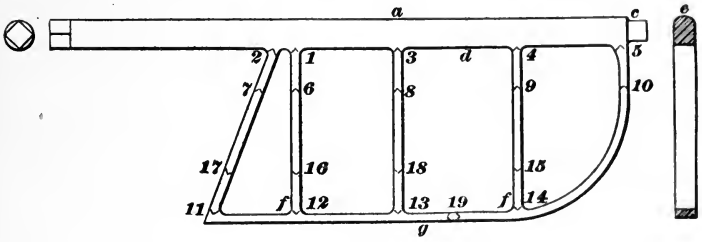

FIG. 63

it is turned 9 inches in diameter, a length of 6 feet. A pivot *c* is also turned at the lower end. The part of the frame *d* to which the arms are welded is square on that side and half round on the back, as shown in section at *e*. The arms, where they are joined to *d*, are from 3 to 4 inches by

9¼ inches. At the outer end *f* they are 3 inches by 9¼ inches, and the part of the frame at *g* is the same size. Most of the welds are V-shaped, or cleft welds, but occasionally it is found advisable to make use of a double-cleft weld into which a diamond-shaped piece is welded. The most of the welding is done without taking the frame out of the fire. The frame, having been laid on a flat topped forge, is temporarily enclosed in firebrick at the point to be welded; the fire is then built under and around the point, the top of the brickwork being covered with several sections made up of an iron frame filled with firebrick and provided with a bail, or eyebolt, for lifting the section to replenish the fuel or remove the work. Sometimes a chain fitted with a turnbuckle is so arranged on either side of the frame as to enable the parts that are to be welded to be drawn together. Two steel ramming bars are provided, each about 9 feet long and 1¾ inches in diameter, except at the working end, where they are 2½ inches in diameter and slightly rounded. When the welding heat is reached, the turnbuckles are quickly tightened, the ramming bars introduced through either end of the furnace, and the scarf of the weld vigorously pounded down. The top covers of the furnace are then removed and three men with sledges finish the upper edge of the weld. The piece is then lifted out of the fire and placed on the anvil and the entire weld gone over with sledges, three men striking at the rate of about 36 blows each, or 108 blows per minute, on the work. Care is usually taken to have a little surplus stock at the weld, which is then trimmed off with a hot cutter.

58. Welding Pipe.—An open fire with an overhead hood is well adapted to pipe welding, which may be done in a forge fire in several ways. In the case of extra heavy iron or mild steel pipe welded together in lengths varying from two pipe lengths to 300 or 400 feet, as used for refrigerator coils and sometimes for steam coils for heating liquid, the pipe may be prepared by reaming it out at one end to a taper of about 60°, the other end being given an outside

taper to match. This can be done on a turret machine or, with suitable dies, on a bolt cutter. For long lengths, a wooden trough or box, as long as the pipe, is usually provided. The ends of the pieces of pipe, with inside and outside taper, are placed in the fire and brought to a welding heat, using a little sand or other flux if the material requires it. The ends of the pipe are brought together in the fire, and two or three sharp blows are given on the cold end of one of the pipes by the helper, the smith meantime holding the other pipe. The weld is started by the blows on the end of the pipe, which is quickly drawn through the fire, bringing the weld into a bottom swage or on to an anvil located near the fire and directly under the pipe. The blacksmith applies a top swage, while the helper strikes light quick blows on the swage with a very light sledge hammer, the blacksmith turning the pipe meanwhile. The welding must be very quickly done, as pipe cools more quickly than solid iron. A few passes of a coarse file will remove the scale, and the pipe is then moved endwise in the trough for the next weld.

59. Welding Boiler Tubes.—Boiler tubes that have been burned or worn at one end may sometimes be repaired by cutting off from 4 to 6 inches of the defective ends and piecing them out by welding on new ends. Boiler tubes being generally made of good material, but thin, are not countersunk and tapered, but are heated at the end, one end being slightly enlarged on the horn of the anvil or on a tapered mandrel, and the end of the other piece being slightly tapered by swaging down. After the entire set of tubes, or at least a large number of them, and the short pieces have been thus prepared, the welding is proceeded with by putting them into the fire side by side, and bringing them quickly to the welding heat, rotating each in the meantime. The smith then takes the tube, and the helper the short piece, to the anvil, where they are put together, driven endwise, and swaged quickly to complete the weld.

TOOL DRESSING

TOOL STEEL

CARBON STEEL

MANUFACTURE, TEMPER, AND TREATMENT

1. Definitions.—The steels commonly used in making tools are compounds of iron and carbon, and are classified as **high-carbon steels,** to distinguish them from the **alloy steels,** which contain, in addition to carbon, some one or more of the following elements: manganese, nickel, aluminum, chromium, tungsten, molybdenum, copper, arsenic, sulphur, and phosphorus, the last four elements being impurities that, when present in any considerable quantity, injuriously affect the quality of the steel. The high-carbon steels are also known as **tool steels,** the various grades of which differ from one another principally in the amount of carbon they contain. The most valuable property of high-carbon, or tool, steel is that it can be hardened and tempered.

The best grade of tool steel is made by what is known as the **crucible process,** and is called **crucible steel.** Other forms of tool steels, of lower grades, are called **blister steel** and **shear steel.** The processes by which these are made are described briefly in the following articles.

2. Blister Steel.—In the manufacture of blister steel wrought iron is packed in charcoal and then heated to a high temperature; the iron absorbs carbon from the charcoal, and is thereby converted into steel. Blister steel is made of bars

COPYRIGHTED BY INTERNATIONAL TEXTBOOK COMPANY. ENTERED AT STATIONERS' HALL, LONDON

of very pure wrought iron, which is practically free from carbon. The bars, which are about $\frac{5}{8}$ inch by 5 inches, and 12 feet long, are packed with pulverized charcoal in boxes made of fire-resisting material, which is usually a special stone cut into slabs to make boxes about 3 feet wide by 3 feet high. Layers of iron are alternated with layers of charcoal to fill the boxes, after which they are sealed to exclude the air. The boxes are placed in a furnace in which the temperature is gradually raised to about 3,000° F., and maintained so for several days, after which the furnace is allowed to cool. The carbon in the metal is not uniformly distributed, however, the proportion of carbon being greatest at the surface. Since this process of manufacture causes portions of the surface of the metal to swell out or blister into scales, the product is called *blister steel*. This steel is quite brittle, and because of its uneven structure is unfit for general use. Sometimes the blisters are scraped off and the bars heated to a cherry red for a few days in order to distribute the carbon more evenly throughout the metal.

3. Shear Steel.—Shear steel is made from blister steel by cutting up or breaking the bars into short lengths, then piling, heating, and fluxing them, and bringing them to a welding heat, when they are welded together under a heavy hammer and rolled out into bars. If the bars of shear steel are again cut up and the short pieces welded into a block and then rolled into bars, the product is called *double-shear steel*, which possesses greater uniformity of structure than *single-shear steel*. Shear steel and blister steel are now seldom used directly in tools, except in cases where it is necessary to weld steel, as, for instance, in anvil faces.

4. Crucible, or Cast, Steel.—What is known as **crucible steel** is made by melting blister steel, or some combination of other suitable materials, in a crucible, and then casting the charge into an ingot that is reheated and rolled into bars. One method of making crucible steel, which is also called **cast steel**, is to pack blister steel, which may be broken into small pieces, into crucibles, and then melt it.

These crucibles are about 2 feet high and 10 inches in diameter, and are capable of withstanding very high temperatures. The melting furnaces are of various forms, but all are either lined with or made entirely of refractory material; frequently they are rectangular in form, and large enough to hold two crucibles with the necessary fuel for melting their charges. They are arranged side by side in a row and connected with a common flue; their tops are usually on a level with the floor, while the ash-pits are reached from a pit extending along the front of the row.

Sometimes manganese and also material for a flux are added to the charge in the crucibles, after which the crucibles are carefully covered with air-tight lids made of the same material as the crucibles. After the charge is fused, it is cast into an ingot, which is more uniform in structure than the blister steel from which it was made. This ingot is reheated and worked under the hammer, then rolled or hammered into bars and placed on the market; this working greatly improves the quality of the metal.

The product of this method of working was the first to be called crucible or cast steel, but now the term is applied also to the product obtained by fusing together in sealed crucibles, as described above, wrought iron and carbon, to which there are sometimes added manganese, tungsten, chromium, molybdenum, and a flux, and casting them into an ingot that is treated in the same manner as that just described.

The material called *cast steel*, the use of the term being herein confined to crucible tool cast steel, must be carefully distinguished from the material represented by the term *steel casting*. The latter term denotes a material made by a different process, and is altogether different from cast steel.

Many of the modern furnaces are fired by gas or crude oil. The contents of the crucibles are sometimes poured into a large ladle, which mixes the charge and insures a more uniform grade of steel. The contents of this large ladle are then poured into ingot molds, and these ingots are subsequently worked down under hammers or with rolls. The best tool steel is worked down entirely under hammers.

5. Temper of Tool Steel.—The steel maker uses the word **temper** to indicate the amount of carbon in the steel; thus, steel of high temper is steel containing a high percentage of carbon; steel of low temper is steel containing little carbon; steel containing amounts of carbon between these is said to be of medium temper. This term should not be confused with the act of tempering, which is an operation for reducing the hardness of steel to such a degree as to adapt it for doing the particular kind of work required. The temper of steel is often indicated by saying that it has a certain number of **points of carbon**, a point being .01 per cent.; thus, when it is said that a piece of steel contains ten points of carbon, it has ten one-hundredths per cent., or one-tenth of 1 per cent. of carbon, which is written .1 per cent. carbon.

Seebohm gives the following list of useful tempers for tool steel:

Razor temper, 1.5 per cent. carbon. This steel requires very skilful manipulation, as it is easily burned by being overheated; when used for turning chilled rolls, it will do much more work than ordinary tool steel.

Saw-file temper, 1.4 per cent. carbon. This steel also requires very careful treatment; although it will stand a higher degree of heat than the preceding temper, it should not be heated beyond a cherry red.

Tool temper, 1.25 per cent. carbon. Steel of this temper is most useful for drills and lathe and planer tools when they are to be used by the average workman; by careful and skilful manipulation, it is possible to weld steel of this temper.

Spindle temper, 1.1 per cent. carbon. This is a good temper for very large turning tools, circular cutters, mill picks, taps, screw-thread dies, and the like; it requires much care in welding.

Chisel temper, 1 per cent. carbon. This is a very useful temper for a great variety of tools. The steel is not difficult to weld, is tough when unhardened, and may be hardened at a low heat, it is well adapted for tools that must have a hard

cutting edge backed by unhardened metal that will transmit the blow of the hammer without breaking, as in cold chisels.

Set temper, .8 per cent. carbon. Steel of this temper is well adapted for tools, such as cold sets, having an unhardened part that must *hold up* under the severe blows of a hammer; it may easily be welded by a smith accustomed to working tool steel.

Die temper, .75 per cent. carbon. This temper is suitable for tools that must have a hardened surface and be able to withstand great pressure, as dies for drop hammers, or for pressing or cupping sheet metal into boiler heads and allied forms; it is easily welded. Recent practice, however, has tended toward the use of steels of higher temper for die work.

The percentage of carbon in the steels suitable for different classes of work under average conditions are as follows:

.5 per cent. carbon for hot work, battering tools, hammers, etc.

.6 to .7 per cent. carbon for dull-edged tools.

.7 to .8 per cent. carbon for cold sets and hand chisels.

.8 to 1 per cent. carbon for chisels, drills, dies, axes, knives, etc.

1 to 1.2 per cent. carbon for axes, knives, large lathe tools, large drills, and dies. If used for drills and dies, great care is required in tempering.

1.2 to 1.7 per cent. carbon for lathe tools, small drills, etc.

The best steel for general work is that containing from .9 to 1 per cent. carbon.

6. Annealing is a term applied to the operation of heating steel to a cherry red and then permitting it to cool slowly, thereby causing it to become soft and of uniform structure throughout.

7. Hardening is a term applied to the operation of heating steel to a medium cherry red and then cooling it suddenly. The steel is usually cooled by plunging it in water. The degree of hardness depends on the amount of carbon in the steel, the temperature to which it is heated, and the suddenness with which it is chilled.

For hardening high-carbon tool steel, it should be heated to from 1,330° F. to 1,365° F., and never above 1,470° F.

If tungsten or chrome steel is heated to 1,800° or 2,000° F. and cooled in a blast of air, or in warm oil, the steel will be hardened. This operation is often termed **treating** or **air-hardening**, if done with air.

8. Tempering is a term applied to the operation of reducing the hardness of steel to any desired degree. If a hardened piece of steel is slowly heated, it will gradually become softer as the temperature rises; when the desired hardness is reached, any further rise in temperature and consequent softening of the steel can be prevented by dipping it into some cold liquid.

WORKING TOOL STEEL

SPECIMEN PIECE

9. Preparing Specimen Piece.—The hardening characteristics of steel may be shown by making a specimen piece, such as is shown in Fig. 1, and so tempering it that

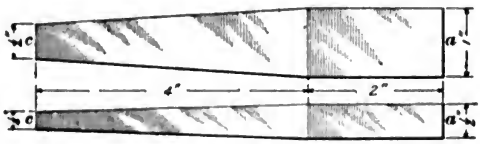

FIG. 1

it will present all the degrees of hardness from an annealed soft steel to one so hard and brittle that a sharp corner of it will scratch glass.

A piece of tool steel is drawn out to a wedge shape, as shown, measuring $\frac{1}{4}$ inch by $\frac{1}{2}$ inch at the small end, and $\frac{1}{2}$ inch by 1 inch at the large end. The tapering part is made about 4 inches long, but 2 inches of $\frac{1}{2}'' \times 1''$ stock is left on the large end, making the total length of the piece 6 inches.

This piece is filed bright and is then polished with emery cloth.

10. Hardening Specimen Piece.—The piece is heated to a bright red and then dipped into cold water, being held in the tongs by the large end. It should be dipped endwise and vigorously moved up and down until cold throughout. When cold, it is again rubbed with emery cloth until bright. It will be found to have a mottled appearance; the file will not cut it, and it is hard and brittle.

11. Drawing the Temper.—If the end of a bar of iron at least 1 inch square is heated, and the specimen piece laid on the hot bar, while a piece of cold iron about 1 inch thick is laid under the point to keep it from touching the hot iron, the large end *a* will rapidly become hot from its contact with the heated bar of iron, while the other end *c* will warm up very slowly. Soon it will be noticed that colors have begun to appear on the surface of the steel. A very pale yellow starts at the hot stock and creeps toward the small end, being followed by a darker yellow, then by a brown, and so on, until by the time the yellow is close to the small end, the large end is of a deep slate color; this operation is called **drawing the temper.**

12. Temper Colors.—The colors produced in tempering steel tools are caused by the oxidation of the surface of the steel. The amount and character of oxidation, and therefore the color, vary with the temperature, and indicate the temperature to which the part has been heated.

The colors in their regular order, beginning with that indicating the greatest hardness of the steel, are generally known by the following names: very pale yellow, pale yellow, full yellow or straw, brown, brown with purple spots, purple, dark blue, full blue, light blue, and gray. By the time the first tinge of yellow appears within $\frac{1}{4}$ inch of the small end, the heat of the stock will be nearly spent; at this time the piece should be plunged into water and cooled for the purpose of fixing the temper and color. The piece will then be soft enough to file at the large end *a*, while the point remains

hard and brittle. If the piece is cooled in an air blast, the colors will be brighter.

13. Temperatures Corresponding to Temper Colors.—Table I shows what colors are produced at various temperatures, and it also gives the names of a few tools or instruments usually tempered to the various degrees of hardness obtained at these temperatures. The temper should be drawn slowly, as it is easier to watch changes of color, and the danger of drawing it too far is reduced. Different makes of steel vary somewhat as to the degree of hardness corresponding to a given color, but the table may be taken as representing a fair average.

By examining the gradations of color on the accompanying chart of Temper Colors and Approximate Temperatures through a narrow slot, say $\frac{1}{8}$ inch by $1\frac{1}{2}$ inches in a piece of white paper or cardboard, placing the opening in the cardboard opposite the name of the color to which the temper of the steel is to be drawn, an approximately correct idea of the various temper colors given in Table I may be obtained. It should be borne in mind, however, that the color values of the chart are not in any sense fixed or absolute, for in practice it will be found that different grades of tool steel exhibit different gradations of color when tempered. Practice in tempering any given grade of steel is therefore necessary in order to determine whether the degree of hardness corresponding to a given color on the chart is such as to enable different tools to meet the requirements of the work for which they are intended. The chart will, however, serve as a guide in determining the characteristic qualities of various grades of steel.

MAKING A COLD CHISEL

14. Forging a Cold Chisel.—If it is required to make a cold chisel of the form and dimensions illustrated in Fig. 2, a piece 6 inches long is cut from a bar of $\frac{3}{4}$-inch octagon steel. The piece is put into the fire so as to heat the end, for a distance of about 2 inches, to a medium cherry-red

TEMPER COLORS AND APPROXIMATE TEMPERATURES

Approx. Degrees F.	*Colors*
725.	Gray
600.	Light blue
560.	Full blue
550.	Dark blue
530.	Purple
510.	Brown with purple spots
490.	Brown
	Dark straw color
470.	Full yellow, or straw color
	Light straw color
450.	Pale yellow
430.	Very pale yellow

TABLE 1

TEMPER COLORS AND CORRESPONDING TEMPERATURES OF STEEL

Color	Temperature in Degrees Fahrenheit	Kind of Tool
Very pale yellow	430	Scrapers, light-turning tools, lancets
Pale yellow	450	Razors, surgical instruments
	460	Lathe tools, milling cutters
Full yellow, or straw	470	Penknives, drills for iron
Brown	490	Taps, reamers, dies for screw cutting, small cutlery, shears, flat drills
Brown with purple spots	510	Axes, planes, pocket knives, wood chisels
Purple	530	Twist drills, cold chisels for very light work, table knives, large shears
Dark blue	550	Wood saws
Full blue	560	Stone-cutting chisels, fine saws, daggers
	580	Carving knives, springs
Light blue	600	Drills for wood, cold chisels, swords
Gray	700 to 750	

color. The fire must be clean and the heat raised with sufficient rapidity to prevent *soaking* the steel, and yet heat the piece thoroughly without burning the corners. **Soaking** consists in heating the steel so slowly that there is a loss of carbon from the surface of the steel, and as a result the surface becomes too soft. On the other hand, too rapid heating results in overheating, or burning, the steel, also causing unequal expansion in the piece, which may cause it to crack when being hardened.

When a medium cherry-red heat is reached, the end of the piece is drawn to a wedge shape by rapid hammer blows. If the end begins to spread sidewise, it can be brought back into shape by a few hammer blows on the edges; all the edgewise hammering should be done early, and none toward the finishing, when the heat is low. The end is

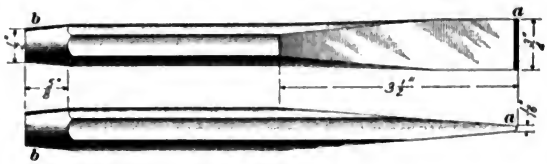

FIG. 2

drawn to an edge *a* by light hammer blows, taking care not to work it below a black heat, as this would tend to crack it. When the edge has been drawn out, the rough or ragged part is cut off with the hot cutter, laying a piece of soft iron between it and the anvil so as to avoid cutting against the hardened face of the anvil and spoiling the hot cutter. The head of the chisel is then rounded, as shown at *b*, Fig. 2. The chisel is now ready to be tempered, which operation may be divided into three steps: *annealing*, *hardening*, and *drawing the temper*, or *tempering*.

In most cases the piece should be annealed in order to make it homogeneous; although the annealing is often neglected, better results are obtained when it is done. When steel is worked, its structure changes, and in the case of the chisel, the thinner part—having been worked more than the thick part, and having been heated more rapidly

and to a higher temperature, and also having been cooled more quickly by the cold anvil and hammer—is, therefore, more likely to be brittle, and the steel is no longer homogeneous, or in other words, uniform in structure. It should be made so, however, before tempering; otherwise the various parts are likely to be tempered unevenly. The process of heating for hardening the tool does much to restore the uniformity of steel, but often this is not sufficient, and for this reason it is preferable to anneal every tool before it is hardened. To anneal the steel, it is put into the fire and heated to a dull red heat, care being taken not to overheat the thin edges. When uniformly heated, it is taken from the fire and placed in the warm ashes on the side of the forge, and allowed to cool until the heat produces no visible color when the piece of steel is held in a dark place, as under the forge; and then it may be cooled by being plunged into water. This makes it homogeneous once more, and it is ready to be hardened.

15. Hardening a Cold Chisel.—In order to harden the chisel, it is heated to an even, medium-red color, a little below the forging heat and a little above the annealing heat. It is then plunged endwise into cold water, care being taken to plunge it in straight, letting the sharp end strike the water first. It should be thrust down vertically, then moved up and down, in order to bring its surface in contact with as much cold water as possible, thereby cooling it rapidly. If plunged sidewise, one side will cool sooner than the other, and the piece will warp. This would not be a very serious defect in a cold chisel, but it would be in finer tools, and carelessness in making rough tools might lead to carelessness in making finer ones. When plunged, the work should not be held quietly, because the hot tool transforms the water with which it comes in contact into steam, which envelops the steel and keeps off the cold water; by moving the piece continually it is chilled more effectively. Moving the steel from side to side, however, has the same effect as that of plunging it sidewise.

16. Tempering a Cold Chisel.—When properly hardened, the faces of the chisel are rubbed bright with emery cloth or sandpaper, or a piece of grindstone, so that the colors can be watched while drawing the temper. If the body of the chisel is now heated by holding it across a bar of hot iron, the temper will be drawn gradually, and when the brown color reaches the cutting edge, the point of the chisel is dipped into water to hold the temper where it is. The chisel can then be ground on a grindstone and tried on a piece of iron. The point should be the hardest part of the chisel, for if there is a harder part farther back, the chisel will be likely to break at that place.

17. Hardening and Tempering a Cold Chisel in One Heat.—In practice, a cold chisel is generally hardened and tempered in one heat. The cutting end is heated to a medium red, letting the heat extend pretty far back. It is then taken from the fire and the point plunged into cold water, chilling it about $1\frac{1}{2}$ inches back. In plunging a piece of steel in this way, it must be moved up and down a little, so as to avoid starting a water crack between the hardened part and the soft stock. As soon as the point has been sufficiently chilled, it is polished rapidly. The heat still retained in the stock will gradually run to the point and draw the temper, and the colors can be watched on the bright part. When the desired color is reached at the point, the chisel is dipped into cold water to hold the temper where it is. In dipping tools for hardening or tempering, great care must be taken to keep them in the water long enough to chill the steel throughout. When the tool is dipped, the outside becomes chilled and contracts, forming a hard, brittle shell for the heated interior mass of metal. As the latter cools it also contracts, but being held to the already hardened external shell it cannot contract to its original size, and hence there is produced an internal stress on the steel that may cause it to crack. To prevent cracking, the steel should not be plunged when heated beyond medium-red heat.

MAKING A CAPE CHISEL

18. The form and dimensions of the cape chisel to be made are shown in Fig. 3. The heated end of the bar of steel is laid across the rounding edge of the anvil, the end of the bar toward the hand being below the face of the anvil,

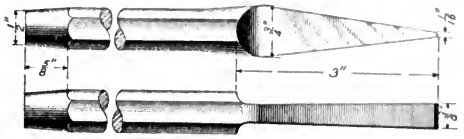

FIG. 3

as shown in Fig. 4. The first forming, which is begun at a distance from the end of the bar that will give sufficient metal for the chisel, is for the shoulders of the sides where they widen into the handle of the chisel. For this the fuller is used over the rounding edge of the anvil, care being taken to have the shoulders equal and opposite each other. The piece is turned frequently, so that the effect of the work may be seen and the sides kept alike. After the shoulders have been formed, the stock on the sides may be drawn down slightly with the fuller before the sledge and hammer are used to bring the chisel, roughly, to the form shown in

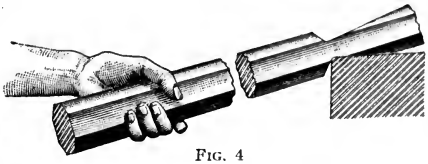

FIG. 4

Fig. 3. The finishing is done with a hand hammer or a flatter. When properly formed, the chisel is cut from the bar to the required length, which ranges between 6 and 8 inches, and the head is formed, after which the chisel is annealed.

The point is then generally hardened and the temper drawn in a single heat, in the same manner as described in connection with the cold chisel.

MAKING A HAMMER

19. Forging a Hammer.—For practice in working tool steel, the making of a cross-peen hammer, like that shown in Fig. 5, is useful. Two hammer heads may be

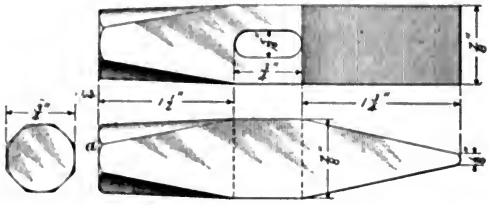

FIG. 5

made at one operation, by using a piece of tool steel $\frac{7}{8}$ inch square and $5\frac{3}{4}$ inches long. Having, with a center punch, marked their centers $1\frac{1}{4}$ inches from each end, as shown in Fig. 6, punch the holes for the handles with an eye punch having a point considerably smaller than the required hole; drive the punch half way through, then drive from the other side. The hole is then finished by driving into it what is known as a **drift pin**, that is, a pin of the required size and shape. To make the sides of the hole parallel and the opening of the proper shape, it is necessary to work the pin, or drift, into the hole made by the punch, very carefully, keep-

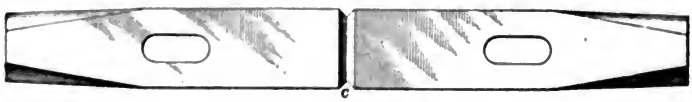

FIG. 6

ing the steel closed around the drift during the operation of shaping the hole so as to permit of wedging the hammer handle therein. The stock must be hot enough to work freely.

The face end *a*, Fig. 5, is drawn out to the form shown; the change in section from the square to the octagonal, and the slight taper from the eye to the face, will increase the length by $\frac{1}{4}$ inch, or more. Holding in the tongs the end that has

been drawn out, the other end is treated in the same manner. Next, the stock is cut apart at *c*, Fig. 6, and the peen ends are drawn to the form and dimensions shown in Fig. 5. Ball-peen hammers and those having other shapes may be made in nearly the same manner. The drawing may be done with a hand hammer, or with the fuller and flatter.

20. Hardening and Tempering a Hammer.—A machinist's or blacksmith's hammer is usually hardened by grasping the peen end in a pair of tongs and heating the face end by thrusting it only a little way into the fire, turning it frequently. There is danger that the outside corners will be overheated before the center of the hammer face is hot enough to harden properly. The easiest way to avoid this is to heat slowly, though care must be taken not to let the heat run too far back toward the eye. Some smiths cool the corners of the hammer slightly by dipping them into water, holding the hammer nearly flat and revolving the corners in the water, thus cooling them slightly. The hammer is then replaced in the fire until it is brought to the hardening temperature, usually a dull red, when it is hardened by dipping the face about $\frac{1}{2}$ inch into the water, and moving it about quickly with a circular motion. This will harden the face; its hardness should be tested with a file, both in the center and at the corner, and if sufficiently hard the face may be brightened with emery paper or a piece of grindstone, and the temper drawn to a purple or blue by the heat remaining in the body of the hammer. The hammer may then be cooled in water sufficiently to arrest the temper-drawing process. The same operation is repeated in hardening and tempering the peen end of the hammer, care being taken to keep the face end cool by sprinkling with water if necessary.

MAKING A DIAMOND-POINTED LATHE TOOL

21. Forging a Diamond-Pointed Lathe Tool.—The stock for a small diamond-pointed lathe tool should be of tool steel $\frac{1}{2}$ inch by 1 inch in section and $\frac{1}{2}$ inch less than the

length of the finished tool. The form of a right-hand tool is shown in Fig. 7. One end is squared and given a $\frac{1}{16}$-inch bevel on the edges, as shown at *e*, and the other end drawn to the form shown in Fig. 8 (*a*). Next, it is drawn to the form

Fig. 7

shown in Fig. 8 (*b*), and then the edge *b* is placed in contact with the face of the anvil, holding the body of the tool obliquely across the side, as shown in Fig. 9 (*a*), and a few blows struck on the uppermost corner. Its position is then shifted until the other inside corner is in contact with the anvil face, as shown in Fig. 9 (*b*), and a few blows again struck on the uppermost corner. It is now returned to the

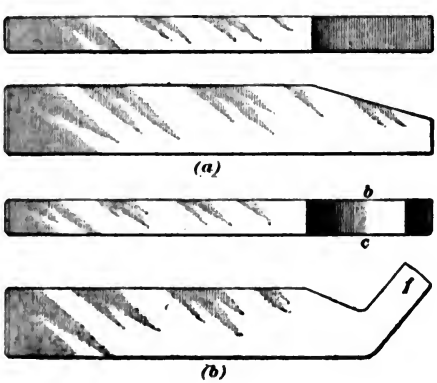

Fig. 8

first position and a few blows struck, when it is changed again. This operation is continued until the end is square in section and of the form shown in Fig. 7. Next, the point *f*, Fig. 8 (*b*), is cut off at an angle, as shown in Fig. 7, with a sharp cutter, the direction of the cut being from

the angle *d* to the opposite corner. The point is then bent to one side, as shown. All the work must be done at a low heat or the steel will be injured. Care must be taken, however, in working at a low temperature to prevent a crack forming at *a*, Fig. 7.

The tool is then hardened and the temper is drawn to a light straw color for about $\frac{1}{4}$ inch back from the cutting edge. The hardening and tempering are done in the same manner as described for the cold chisel.

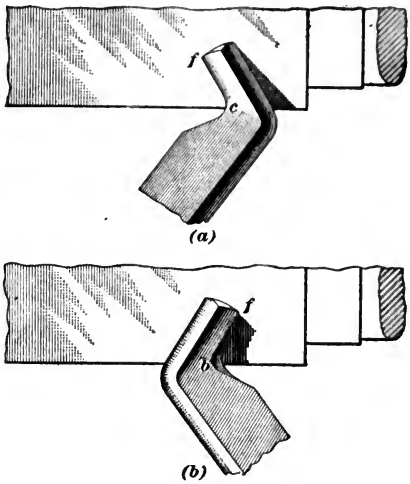

FIG. 9

22. Forging a Right-Hand Side Tool.—To make a right-hand side tool, take a piece of tool steel 1 inch by $\frac{1}{2}$ inch in section and the length required for the tool, which is to be of the form shown in Fig. 10. Bevel one end of the stock $1\frac{1}{4}$ inches from the corner, as shown in Fig. 11 (*a*); then place it on the anvil so that the corner *a* is over the rounded edge, the piece being held as shown in Fig. 11 (*b*), and drive it down with blows delivered in the direction of the arrows in Fig. 11 (*c*). This will bring it to the shape shown in Fig. 11 (*d*), the edge *c d* being made thinner than the back *e f*. When it is forged to the right thickness and

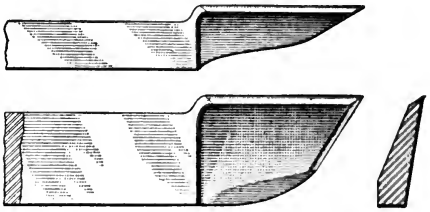

FIG. 10

the back properly shaped, the edge and point are cut off with a hot cutter to the shape indicated by the dotted lines in Fig. 11 (*d*). After the parts are made of the required thickness and dimensions, the edge is set over to one side in the manner shown in Fig. 11 (*e*), the piece being placed over

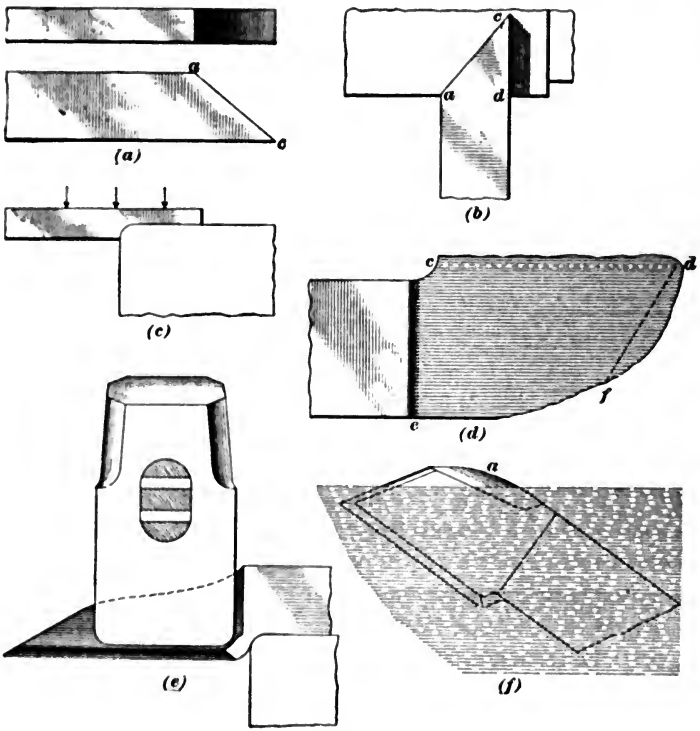

FIG. 11

the rounded edge of the anvil and the set hammer used as indicated.

The temper should be drawn to a dark straw color. Care must be taken not to overheat the thin edge, and it is well to dip this tool as shown in Fig. 11 (*f*); this leaves the heel *a* red hot, and provides a source of heat for drawing the temper.

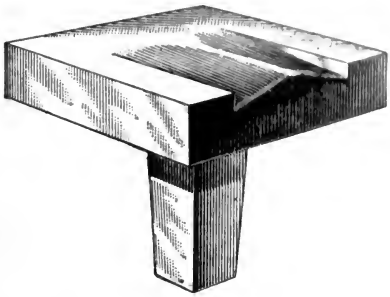

FIG. 12

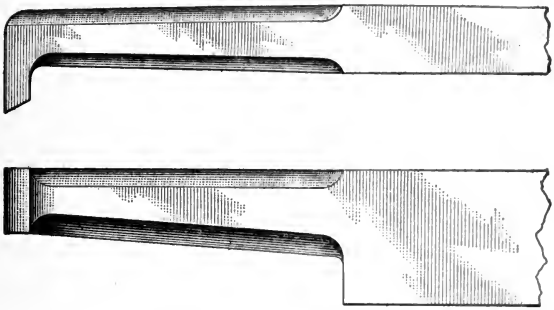

(a)

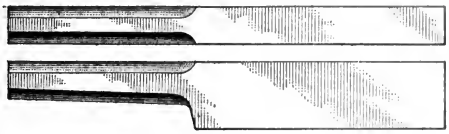

(b)

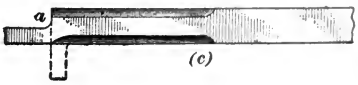

(c)

FIG. 13

23. Special Swages.—When a large number of tools are to be dressed, it is advisable to use special swages, one form of which is shown in Fig. 12. This one is used for either right- or left-hand side tools; it fits the hardie hole, and tools are formed in the swage by means of a flatter.

MAKING A BORING TOOL

24. Forging a Boring Tool.—The boring tool shown in Fig. 13 (*a*) is made of the same stock as the side tool. A proper amount of the end is drawn down with the sledge and hammer to the form shown in Fig. 13 (*b*). Then $\frac{1}{4}$ inch of the end is placed on the anvil, the shoulder shown at *a*, Fig. 13 (*c*), is formed, and the end bent to the shape shown by the dotted lines in Fig. 13 (*c*). The point is cut to the required shape with a sharp hot cutter, and the tool finished as shown in Fig. 13 (*a*).

This tool is tempered to a dark straw color, as was the side tool. In most cases, only the cutting edge is left hard, the temper being drawn by allowing heat from the body of the tool to run to the point. In the case of very long slender tools, the entire length of the drawn-out portion of the tool is sometimes hardened to give stiffness to the tool. The neck is then drawn to a spring temper by heating over a bar of hot iron.

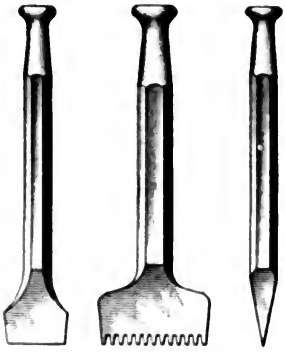

FIG. 14

SPECIAL TOOL DRESSING

25. Stone Chisels.—For carving and lettering stone, special chisels are used with wooden mallets. They have a ball-shaped head, as shown in Fig. 14, and the body is swaged down tapering under the head; this lightens the chisel and gives it a better balance in the hand. These chisels are made of $\frac{1}{4}$-, $\frac{1}{2}$-, $\frac{5}{8}$-, and $\frac{3}{4}$-inch octagonal steel. In

making these chisels, the pieces of steel are cut off at a proper length for two chisels, and the ends of six or eight pieces are placed different distances into the fire. The one farthest in the fire will arrive at the proper heat first, and be removed, and placed in the heading machine, Fig. 15, which is similar to a bolt heading machine; a regular bolt heading machine may be used if desired. The lower end of the steel rests on a support *a*, the upper end is gripped between the dies *b* by

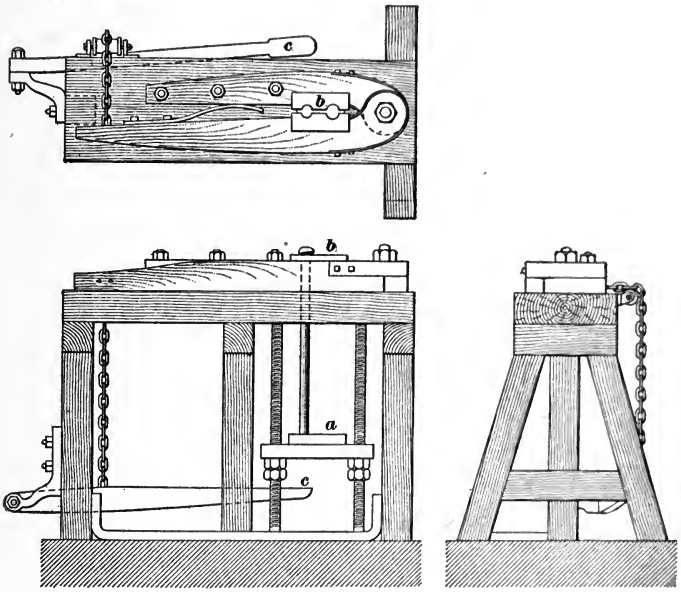

FIG. 15

the pressure of the foot on the treadle *c*, and the steel is quickly upset by a few blows of a light sledge and the blacksmith's hammer. The hot steel is then removed to a hardened-steel die, or swage, *d* on the anvil shown in Fig. 16. This die rests loosely on the face of the anvil, and is held in place by the saddle *e* placed across the anvil. The clamp *f*, fastened with two setscrews, helps to retain the die on the anvil. A top swage *g*, with a handle about

1 foot long, is also used. The ball head of the chisel is formed between the top and bottom swages, which also form the taper neck under the head, the steel being rotated during the operation. Sometimes there will form at the center of the head a small teat, which can be knocked off with a hot cutter by a single blow of a light sledge. By the aid of these tools, only a few seconds are required to form each head, a new piece of steel being put into the fire at the same time the hot one is removed. With nicely polished swages, the chisel heads are formed with a smooth finish, which is easy on the wooden mallet. The center of the head is usually touched on an emery wheel to smooth it; after both ends are headed, the pieces of steel are cut in the middle and drawn out into long, slender wedge-shaped chisels.

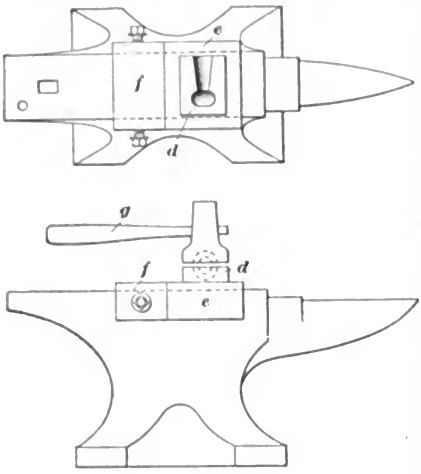

FIG. 16

26. Special Hardie for Stone Drills.—A special hardie, shown at *a*, Fig. 17, is often used in dressing special tools. The hardie fits in a square hole in a saddle placed on the anvil to which it is held by a setscrew on either side.

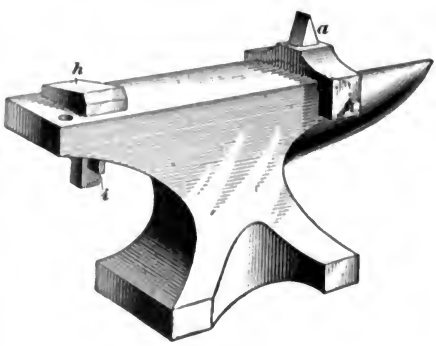

FIG. 17

27. Dressing Stone Drills.—A stone drill, known as the **plug and feather drill,** is shown in Fig. 18. As it is used with the hammer, the ball, or mallet head, is not required, and the end of the drill is a blunt taper. A special fixture *h*, Fig. 17, is used on the anvil while dressing the drill. This consists of a block of steel, about 3 inches square and $1\frac{1}{2}$ inches thick, that has a shank fitting the hardie hole; this shank is slotted for a key *i* that holds the fixture firmly to the anvil. The top of the block slants as shown, and the high side is chamfered, as, otherwise, the edge would be likely to chip off. By using this fixture and the special hammer shown in Fig. 19, the drill may be held level while being forged. The drill should be turned over occasionally while being dressed.

FIG. 18

28. Dressing Marble Turning Tool.—For making columns or other round work, marble may be readily and

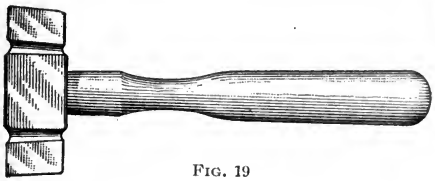

FIG. 19

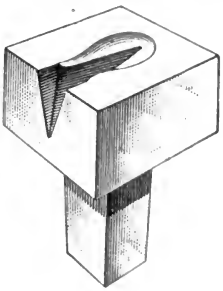

FIG. 20

rapidly turned in a lathe. For such work a different form of tool from that used in lathes for turning metals is required, and frequent dressing is necessary. Fig. 20 shows a steel die having a shank that fits the hardie hole of an anvil, the die being used for giving the proper shape to the nose of the marble turning tool shown in Fig. 21. Such tools are

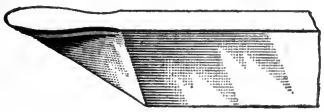

FIG. 21

made with cutting edges either round, oval, square, or diamond shaped, or any special shape desired. The tools are tempered to a straw color.

MAKING A FLAT SPRING

29. Forging a Spring.—To make a flat spring, like the one shown in Fig. 22, a piece of steel is drawn out flat and slightly tapered, care being taken to make the taper very regular, and finishing it with a flatter until it is perfectly straight. The steel is then annealed and filed or

FIG. 22

ground on a stone to remove all irregularities and uneven spots. It may then be bent cold in the hand, or over the horn of the anvil without hammering; or it may be heated and then bent into the shape shown in Fig. 22. When evenly bent it is ready for hardening.

30. Hardening and Tempering a Spring.—If the fire is large enough, the entire spring may be evenly heated in an open fire. Another way to secure uniform heating is to heat it in a pan of sand. The heating should be slow and even, the piece being raised to a cherry-red heat and cooled in oil or water. The spring may be held in the tongs and dipped vertically. After treatment in this manner, the surface should have a mottled appearance; if it has not this appearance, it is probably not hard enough, and the hardening process should be repeated.

When hardened, the steel is rubbed bright with emery cloth and then tempered to a dark blue color. The tempering can be done over the open fire, or in a sand bath previously heated to the proper temperature, or over a piece of hot iron. When drawn to a dark blue color, the spring is plunged into cold water.

The temper may be drawn by holding it over the fire and heating it slowly and evenly by moving it back and forth,

using a light draft. To know when it has reached the right temperature, a pine stick, sharpened to a point, is rubbed over the surface; when sparks follow the stick the right temperature has been reached and the spring is then plunged into oil or water. Care should be taken to heat and cool the spring evenly, in order to prevent it from warping.

The temper of springs may also be drawn by a process variously known as **burning off, flashing off,** and **blazing off,** described in *Hardening and Tempering.*

31. Testing a Spring.—The spring may be tested as follows: Its shape is first marked off on the bench or on a sheet of paper, then it is clamped in the vise at the thicker end and the projecting thin end bent forwards and allowed to spring back several times. The spring is then compared with the drawing to see whether it has changed its form. If so, it is too soft; if it breaks, it is too hard. Or it may be clamped in a vise with a piece of iron, as shown in Fig. 23, and the distance *a* measured; it is then forced down until the point touches the iron. After it is released, if the distance *a* measures the same as at first, it is properly tempered. It must not be struck or dropped after it is tempered, as it might thereby be broken.

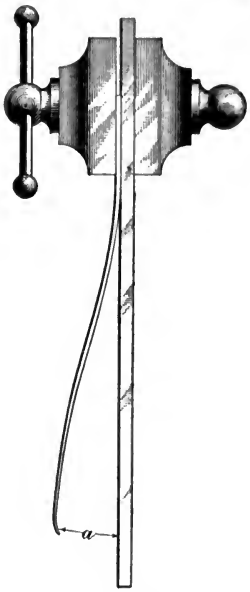

FIG. 23

WELDING TOOL STEEL

32. In order that two pieces of steel may be welded together, it is usually necessary that the parts to be joined shall be heated until they are plastic, and then brought into close contact. If the surfaces are exposed to the air when the parts are heated to a plastic condition, they become covered

with a scale of oxide of iron. Hence, to secure a perfect contact of the parts, this oxide must be made so fluid that it will readily squeeze out from between the surfaces to be welded. To do this, either the steel must be heated to the temperature at which the scale will melt, which will be a very high temperature, or some means must be used to fuse the scale at a temperature below that which would injure the steel by **burning**. This is done by applying to the heated parts a flux that melts and adheres to the heated surfaces, preventing excessive oxidation and, at the same time, uniting with the scale to form a mixture that is fusible at a much lower temperature than would be necessary to melt the scale alone. Borax is commonly used for this purpose.

Before attempting to weld any grade of steel the smith should know its quality, and how its structure and welding properties will probably be affected, if they are affected at all, by varying both the temperature to which it is heated, and the method by which it is worked.

33. It should be borne in mind that the structure of the steel, which means the size of the crystalline grains of which the steel is composed, is affected by the temperature to which it is heated, the amount and character of the subsequent working of the metal in making the weld, the heat of the metal when the forging work on it is discontinued, and the rapidity of the final cooling. Some steels will withstand a greater heat than others without injury, but, in general, the most important points to be observed are the method of working, and cooling, the steel. It seems to be established that the greater the amount of carbon that a steel contains, the lower is the temperature to which it may safely be heated. Suppose that the steel is heated to a full red, or above, for welding, and the work of making the weld is done quickly, leaving the metal still at a high temperature; if the metal is allowed to cool slowly, it will be coarser grained and more brittle than when the forging is continued until the temperature of the steel falls below that of a low red and the metal is allowed to cool slowly from that point. On the other

hand, if, after having finished working, the steel is cooled suddenly to a low red heat by being plunged into water, and then allowed to cool slowly in a dry place, the quality of the grain and the strength of the piece will be superior to that which would result from allowing it to cool slowly from the higher temperature.

If the piece is cooled suddenly from the temperature at which the work was finished to the temperature of the air, by quenching in water, the size of the grain and the strength of the steel will in all probability be superior to that obtained by allowing the steel to cool slowly in the air.

Cooling rapidly from a high heat after forging is likely to crack or break the steel.

With carbon steels, the tempering heat is lower than the annealing heat; the annealing heat is lower than the hardening heat; and the hardening heat is lower than the forging heat. The only exception is in the case of the high-speed alloy steel.

In making a number of articles of steel, should a defect appear always in the same place, it is likely that something is wrong with the method rather than with the steel.

FIG. 24

STEELING

34. Steeling a Pick Point.—The operation of welding a steel edge or point on a tool whose stock is made of wrought iron is termed **steeling.** The cleft weld is generally used for this purpose, on account of its strength. If the point *b* of a pick mattock, shown in Fig. 24, is to be steeled, the iron is split open, as shown at *f*, Fig. 25, and prepared for a cleft weld. The bar of steel *d* is then scarfed on both sides, as shown, both pieces heated, and then welded together. After this, the point is drawn out to the required shape,

as shown. Picks, axes, adzes, and similar tools, are generally steeled in this way.

FIG. 25

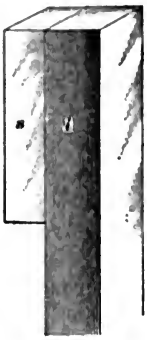

FIG. 26

35. Steel Facing.—When a sheet of steel is welded to an iron back, the operation is called **steel facing.** A thick piece of steel is frequently welded on and the iron and steel then drawn out thin. Plane irons for wood-planing machinery are generally made in this way, with steel faces and iron backs. The iron *i* and steel *s* are welded together so as to make a square piece, as shown in Fig. 26, which is then drawn down to the required thickness.

MAKING FLAT DRILLS

36. Forging a Flat Drill.—The point of a long-shank flat drill, such as is shown in Fig. 27, is made of steel, but the shank is usually iron. To weld both parts together, the steel is formed as shown at *a*, Fig. 28, and the iron as shown at *b*. The iron is heated to a red heat, the cold steel driven into the cleft, and the iron closed about the steel. A welding heat is then taken on the joint, using

FIG. 27

FIG. 28

borax as a flux; the iron, being outside, protects the steel from burning. When heated to a bright cherry-red, the pieces are taken from the fire and welded together. The shank is then cut to the proper length, the end forged

square to fit into the brace or ratchet, and the point forged to the proper form.

When forged, the drill is annealed, hardened, and the temper drawn to a full yellow; and when ground, it is ready for use. The temper of the drill may be drawn by the heat in the shank. If the shank is not hot enough, a large nut or heavy piece of iron having a hole through it may be heated and slipped over the shank close to the point, the drill being held so that it does not touch the hot iron. The heat that radiates from the iron will soon draw the temper. A pair of hot tongs is often used for drawing the temper, the work being held near the point and the temper being allowed to run out as desired.

HIGH-SPEED TOOL STEELS

37. Nature of High-Speed Tool Steels.—High-speed tool steels are alloys of iron and various elements that are added to impart to them the property of hardening. When they are heated white hot and allowed to cool in the air, they become very hard; hence, they are also called **air-hardening** and **self-hardening steels.** The most important elements used are tungsten, chromium, molybdenum, and manganese; arsenic, titanium, etc. are also used, but those first mentioned are the most important, and may be used singly or two or more of them together. Carbon is rarely present in very large quantity in the alloy steels, and when it is present it is unimportant. The introduction of these steels has been so recent and their evolution so rapid that it will be impossible to give more than a few general directions regarding their manipulation. It is best to follow the instructions given by the maker of the particular brand of steel to be used.

Alloy steels may be annealed by packing them in a piece of pipe or an iron box containing powdered charcoal, in which the pieces of steel are embedded. The boxes are well sealed with fireclay to exclude the air, heated to a bright cherry red for several hours, then allowed to cool slowly. The steel will then machine as easily as carbon

tool steel. No alloy steel is as strong as carbon steel, and hence to stand equal stresses, the cutting edge of tools made of high-speed tool steel must be very much more carefully supported than in cutting tools of carbon steel. This is of special importance, since tools of high-speed tool steel are used largely for heavier cuts and at higher speeds than would be possible with carbon steels. This necessitates a redesigning of many of the cutting tools formerly used, so as to adapt them to meet the requirements of the new material.

The most valuable property of alloy steels is that they retain their hardness at a high temperature; in fact, some of them can be used as cutting tools when at a dull red heat. It is this property that has enabled them to be used at high speeds, and has given them the name of high-speed tool steels.

38. Forging High-Speed Tool Steels.—Alloy, or high-speed tool, steel should be heated slowly to a lemon color, and in a thick bed of burning coke or coal, to prevent the air blast from striking it. Alloy steel cools more quickly than carbon steel, and when slightly cooled becomes hard. It is quite plastic at the proper heat, therefore it is better to heat frequently, working quickly a little at a time, as this avoids seams and ruptures. After forging, the tool should be allowed to become cold, and then reheated for hardening or tempering.

39. Tempering High-Speed Tool Steels.—The tempering of high-speed tool steel consists in making it of a suitable hardness. For lathe, planer, and similar tools, it must be heated to a fusing, or white, heat and cooled in air or oil. At a white heat, the steel is very soft and would crumble if struck. It is very necessary to have a non-oxidizing fire, which may be obtained in a covered fire with a large amount of crushed coke over the tuyère, using a light blast. The steel must not be heated too quickly. When the white heat is attained, a slight fluxing will be observed, and as the heat increases numerous small bubbles will be seen; then the

bubbles become larger and fewer in number. If carried to an extreme heat, the steel will soften, a condition sometimes called **sweating.** On reaching the sweating point, the tools are cooled, usually in a jet of compressed air; one method is shown in Fig. 29. The tools are placed on an iron plate *a* with a firebrick on either side and a jet of compressed air from a $\frac{3}{8}$-inch pipe *c* is directed against the point of the tool. In order to insure dry air, it is led through an iron cylinder *b* about 6 inches in diameter and 3 feet long, shown in the illustration, the moisture being deposited in the cylinder. The pipe *d* is 1 inch in diameter. It is sometimes claimed that with this method the tool is cooled too far back from the point, and that it is therefore better to blow the air upwards against the point *a* of the tool, as shown in Fig. 30.

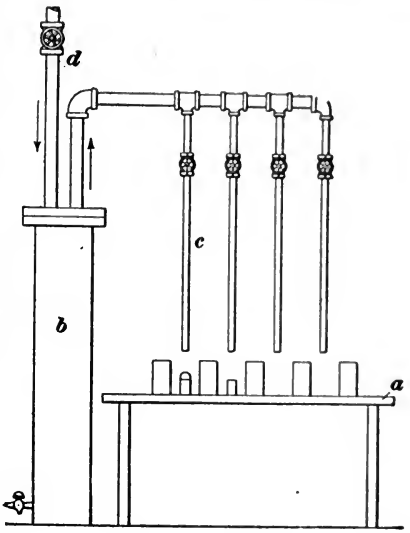

FIG. 29

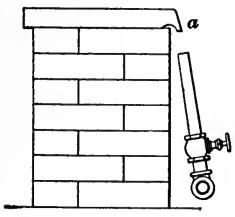

FIG. 30

The cooling of these tools in a shop not provided with compressed air has been accomplished successfully over the tuyère of an empty forge. The tool is placed on a firebrick, with the point down and extending beyond the end of the brick. The brick and the tool are placed on the forge so that the point of the tool is over the tuyère and the blast is turned on. The cutting edge of the tools is sometimes cooled in oil and the temper drawn to the desired hardness;

by using hot oil the cooling is less sudden. This method, however, is better adapted to drills, reamers, punches, and dies, than to lathe and planer tools.

40. Grinding High-Speed Steels.—When grinding any of the alloy tool steels, emery wheels are more likely to glaze than with carbon steels. This is supposed to be due to the fact that the tungsten coats the grains of emery, resulting in a glazed surface of the wheel, which heats or burns the steel in spots and causes it to crack or break. The workman should observe this very carefully, and should dress the wheel at the least indication of glazing. For grinding alloy steel, it is best to use a coarse, soft wheel.

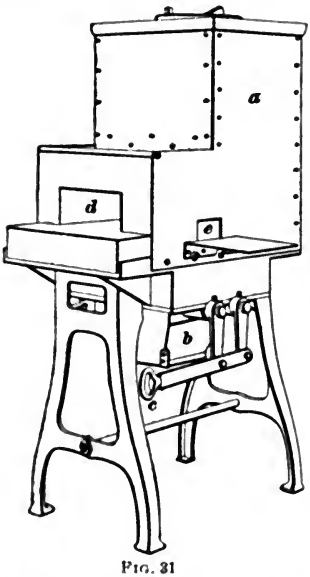

FIG. 31

41. Heating Furnace for High-Speed Tool Steel.—The ordinary blacksmith's fire is hardly capable of producing the desired temperature for heating high-speed tool steels, and it is rare that more than one or two tools can be heated successfully in such a fire without rebuilding it. When tools are forged below the proper temperature, they are likely to crack and give trouble. Some difficulty has been experienced with high-speed tool steels, and they have been abandoned in some shops because uniform results were not obtained. Usually such difficulties may be traced to irregular and improper treatment.

A coke-burning furnace for heating such steel is shown in Fig. 31. The coke is placed in a magazine *a* and fed by gravity into the fire-space. The ashes accumulate in the ash-pit *b*, which is closed, and through which a forced draft is introduced. A rocking grate controlled by the handle *c* is

located above the ash-pit. The point of most intense heat is in the bottom of the coke, just back of the front edge of the fire and over the center of the ash-pit. Two openings are provided in the furnace; the one at *d* leads directly into the fire, and the tools are put in through this opening, where they are heated to a bright-red heat. The opening *e* is then cleared out by means of an iron bar, and a pocket, or hollow, fire formed in the hottest parts of the coke fire. One tool at a time is then taken from the opening *d* and put into the hottest part of the fire through the opening *e*, and allowed to remain until the scale on the surface is seen to be molten. The tool is then quickly withdrawn and placed in a blast of air.

RECOGNIZING STEEL

42. The smith is often called on to pick out a piece of a certain kind of steel from a pile containing iron, low-carbon steel, high-carbon steel, and special steels. Formerly, the only test was to pick up a piece and strike it with a hammer; if it sounded dead it was wrought iron, if it rang it was steel. This did very well when only one grade of steel was used in a given establishment, but now, when many grades are used, it is much more difficult. Some of the low-carbon steels will sound dead under the hammer, but they can usually be separated from a lot of wrought-iron bars, as the surface of the latter is generally very much rougher than that of steel bars. Then, too, breaking a small piece from the end of a bar will show the difference between steel and iron, steel having a crystalline appearance, while the fracture of the iron presents a fibrous appearance. The emery-wheel test, however, is said to be the best for distinguishing different grades of steel. Hardened carbon steels give off bright dazzling sparks when ground on an emery wheel; the harder the steel, the brighter the sparks. Alloy steels and wrought iron give off dull red sparks.

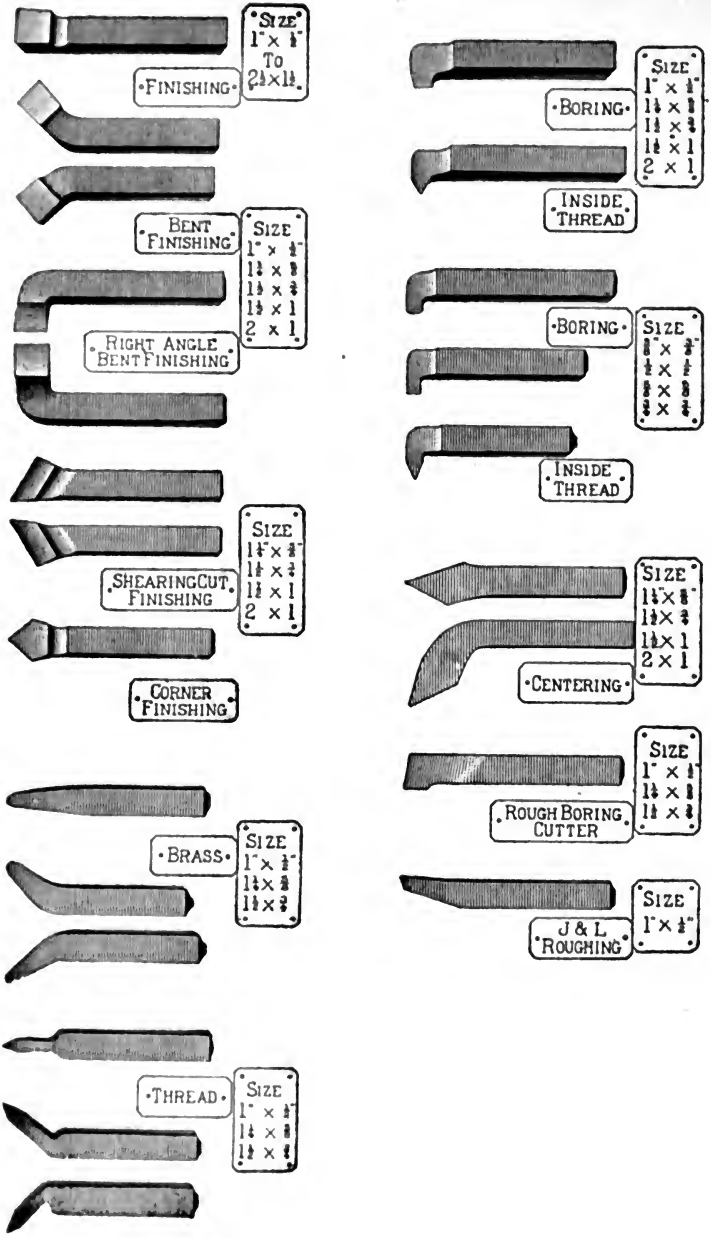
SIZE 1" × ½" TO 2½ × 1½
FINISHING
BENT FINISHING
SIZE 1" × ½" 1¼ × ⅝ 1½ × ¾ 1½ × 1 2 × 1
RIGHT ANGLE BENT FINISHING
SIZE 1¼" × ⅝" 1½ × ¾ 1½ × 1 2 × 1
SHEARING CUT FINISHING
CORNER FINISHING
BRASS
SIZE 1" × ½" 1¼ × ⅝ 1½ × ¾
THREAD
SIZE 1" × ½" 1¼ × ⅝ 1½ × ¾
BORING
SIZE 1" × ½" 1¼ × ⅝ 1½ × ¾ 1½ × 1 2 × 1
INSIDE THREAD
BORING
SIZE ⅜" × ⅜" ½ × ½ ⅝ × ⅝ ¾ × ¾
INSIDE THREAD
SIZE 1¼" × ⅝" 1½ × ¾ 1½ × 1 2 × 1
CENTERING
SIZE 1" × ½" 1¼ × ⅝ 1½ × ¾
ROUGH BORING CUTTER
SIZE 1" × ½"
J & L ROUGHING

FIG. 32 (a)

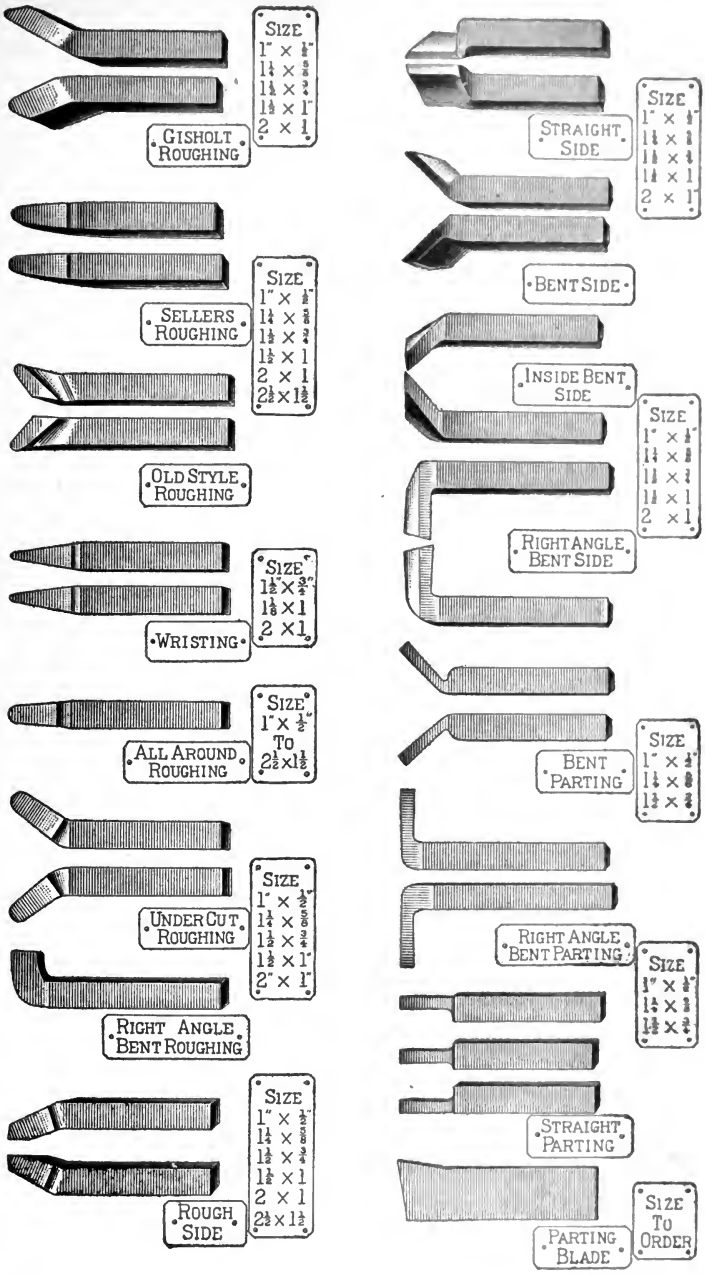
SIZE
1" × 1"
1¼ × 5/8
1¼ × ¾
1½ × 1"
2 × 1
GISHOLT ROUGHING
SIZE
1" × ½"
1¼ × ⅝
1½ × ¾
1½ × 1
2 × 1
2½ × 1½
SELLERS ROUGHING
OLD STYLE ROUGHING
SIZE
1½" × ¾"
1½ × 1
2 × 1
WRISTING
SIZE
1" × ½"
TO
2½ × 1½
ALL AROUND ROUGHING
SIZE
1" × ½"
1¼ × ⅝
1½ × ¾
1½ × 1"
2" × 1"
UNDER CUT ROUGHING
RIGHT ANGLE BENT ROUGHING
SIZE
1" × ½"
1¼ × ⅝
1½ × ¾
1½ × 1
2 × 1
2½ × 1½
ROUGH SIDE
STRAIGHT SIDE
SIZE
1" × ½"
1¼ × ⅝
1½ × ¾
1¼ × 1
2 × 1"
BENT SIDE
INSIDE BENT SIDE
SIZE
1" × ½"
1¼ × ⅝
1½ × ¾
1¼ × 1
2 × 1
RIGHT ANGLE BENT SIDE
BENT PARTING
SIZE
1" × ½"
1¼ × ⅝
1½ × ¾
RIGHT ANGLE BENT PARTING
SIZE
1" × ½"
1¼ × ⅝
1½ × ¾
STRAIGHT PARTING
PARTING BLADE
SIZE TO ORDER

FIG. 32 (*b*)

BREAKING STEEL

43. Steel is generally broken by nicking it, placing the nicked edge over the edge of the anvil and striking the projecting end. Sometimes the end of a light bar is passed through the hardie hole or the pritchel hole until the nick is in line with the top of the anvil; the bar is then broken by jerking it quickly to one side. Another method for breaking off pieces of tool steel, such as those used for cold chisels, lathe tools, etc., is to nick the bar cold at the required distance from the end and pass the bar through a hole in a swage block until the nick comes opposite the edge of the block; the projecting end should then be struck a sharp blow with the hammer. This will break off the piece without stinging the hand supporting the end of the bar, and prevent the piece from flying across the shop.

MACHINE-SHOP CUTTING TOOLS

LATHE AND PLANER TOOL MODELS

44. If the best results are to be obtained from the tools used in the machine shop, only the best forms should be employed for each particular operation; hence, the shop superintendent should determine the best forms for the work to be done, adopt a set of standards, and three sets of iron models of these tools should be forged. One of these sets of models should be ground to the proper form, mounted on a board, and retained in the tool room for reference; the other two sets of forgings should be mounted on boards, one board being kept in the tool room and the other mounted near the tool-dresser's fire. No tool that varies from these forms should be made or used except on special written order from the superintendent or foreman. A set of models adopted as standards at a large manufacturing company's plant is shown in Fig. 32, which gives the name of the tools, together with the sizes of the steel from which the different tools are made.

HARDENING AND TEMPERING

CARBON STEELS

EFFECT OF CARBON ON STEEL

1. What is commonly known as **carbon steel** is composed of iron containing varying amounts of carbon up to about 1.2 per cent.; though for some purposes a slightly higher percentage of carbon is used. The steels containing between .7 and 1.2 per cent. carbon are frequently called *tool steels*, to distinguish them from *low-carbon steels*, which contain less carbon. Tool steel is generally distinguished from low-carbon steel by the fact that when heated to a red heat and plunged into water it will harden. There are, however, some brands of steel, containing a little less than .7 per cent. carbon, that are hardened slightly by this treatment, and hence there is no well-marked division between the low-carbon, or machinery, steel, and the high-carbon, or tool, steel.

It is the carbon that imparts the hardening property to the steel. Carbon, when heated, combines readily with the oxygen of the air; hence, if steel is heated in the presence of air it will loose some of the carbon and the outer surface of the steel will not harden properly. This is of little consequence in tools subjected to considerable grinding, as, for instance, forged lathe and planer tools, but it is very important in the case of such tools as taps and reamers, which are machined to shape and size before hardening. Precautions must therefore be taken, in hardening the last-mentioned tools, to insure the maintenance of a proper percentage of carbon in the surface of the steel.

COPYRIGHTED BY INTERNATIONAL TEXTBOOK COMPANY ENTERED AT STATIONERS' HALL, LONDON

When steel is heated, it becomes red at a temperature of 900° to 1,000° F., and at 1,260° to 1,300° F., passes a point at which it absorbs considerable heat without any increase in temperature, showing that some change is going on in the structure of the metal. If the steel be heated above this point, and then cooled slowly, a brightening of the color may be noticed as it passes this point, which is called the point of **recalescence.** This brightening is due to the liberation of the heat that previously was absorbed at this point.

METHODS OF HEATING

2. Forge Fires.—Practically all steel work, including tool dressing and hardening and tempering, was formerly done in an ordinary forge fire. Certain precautions, however, must be observed in using such a fire in order to insure good work. The fire must be very deep; that is, there must be a large body of incandescent coke between the tuyère and the tool, so as to prevent the blast from reducing the carbon in the surface of the steel. Frequently, what is known as a closed or oven fire is used for some classes of work, but ordinarily a high open fire will be found satisfactory. Sulphur will injure the quality of any tool steel; hence, for heating this class of steel, a fuel low in sulphur should be used. For this reason, charcoal is the best fuel, but its cost and the difficulty in maintaining the desired heat continuously prevent its use in most blacksmith shops. If the coal does contain some sulphur, its injurious effect can be reduced by using nothing but coke for that part of the fire which is under and around the tool being heated. The burning of the coal to coke drives off much of the sulphur.

3. Tube or Muffle in Forge.—In order to prevent a loss of carbon, the steel is sometimes heated in a tube or piece of pipe laid in the forge and brought to the desired heat. Sometimes a cast-iron box, called a **muffle,** is used for this purpose. If the muffle is closed at one end, so that there cannot be a draft of air through it, the heating will be

effected in the presence of such a small amount of air that the surface of the steel will not lose its carbon; then, too, the muffle will protect the steel from any sulphur in the fire. When the tube is used, the blacksmith frequently grasps the end of it in his tongs and gives it a partial rotation; by doing this every minute or two, the steel will be heated more uniformly than if left at rest. This is true when heating round steel; in the case of rectangular work, it is generally necessary to leave the tube in one position.

There is a patented process for heating steel in a closed tube in a gas rich in carbon, so that the surface of the steel will not lose its carbon, as would be the case if heated in air. Natural or artificial gas is supplied to the tuoe through a connection to the cap screwed on one end of the tube, the cap at the opposite end being provided with a hole about $\frac{1}{16}$ inch in diameter, through which the gas is allowed to escape and burn while the steel in the tube is being heated in the furnace. Practically the same results can be obtained by heating the steel in the presence of gas generated by heating a little finely divided coal or resin put into the tube with the steel, the gas filling the tube and driving out the air, thus protecting the steel while it is being heated.

4. Gas Furnace.—With solid fuel, it is difficult to feed it to the proper point whenever needed, and to remove the ashes as they accumulate without producing an uneven heat. Oil or gas is better than a solid fuel for heating steel because a uniform heat can be maintained, oxidation of the steel prevented, and the furnaces used intermittently with convenience. In order to prevent oxidation of the steel, all that is necessary is to adjust the supply of gas in such a way that there will be a very slight excess of gas present to burn beyond the combustion chamber proper. The presence of this gas excludes all air from the steel and consequently all oxidizing action. By properly locating the combustion with relation to the heating space, it has been found possible to construct furnaces capable of maintaining very high temperatures.

5. Heating in Lead.—In order to prevent oxidation it is frequently advisable to heat the steel in some bath that will entirely exclude the air. Molten lead makes one of the most satisfactory baths for this purpose. The lead can be melted in a cast-iron pot or plumbago crucible heated in the forge, or the pot may be heated in a specially constructed furnace. The steel must be left in the bath until it is heated throughout to the desired temperature. As steel will float in molten lead, it is necessary to provide some means for keeping it submerged in the lead bath.

6. Heating in Charcoal.—For heating steel for hardening, some manufacturers use muffle furnaces in which the muffles are filled with charcoal; the steel is placed in the heated charcoal. The advantage claimed for this process is that as the steel is constantly surrounded by very pure carbon fuel at a very high temperature, it will have a tendency to absorb carbon rather than to give it up, and hence there is absolutely no danger of burning the carbon out of the steel. This method is used especially when heating very high-carbon steels.

ANNEALING

7. Annealing by Packing.—The annealing of steel has two objects; first, to soften the metal, and second, to take out the internal stresses. The simplest method of annealing is to heat the steel to a cherry red, and then bury it in some substance that does not conduct heat readily. An iron box nearly filled with slacked lime, ashes, or other material of a similar nature, can be kept near the forge for this purpose. Care should be taken, however, to keep the material perfectly dry and warm. The steel should remain buried until it is cold. In the case of tool steel, the heat for annealing should always be lower than that required for hardening. Overheating a piece of steel opens the grain and reduces the strength.

When a large number of pieces of steel are to be annealed, as, for instance, blanks for taps, reamers, or other tools,

they may be packed closely in cast-iron boxes or in pieces of pipe, using cast-iron chips, fine charcoal, or a mixture of the two, for the packing material. Sometimes the spent, or nearly spent, bone from the case-hardening furnaces is used for packing material. These boxes are then placed in an annealing furnace and brought to the proper temperature, which is a medium-red heat. The draft is shut off and the furnace is allowed to cool slowly. The cast-iron chips conduct the heat better than an air space would, and support the pieces, thus preventing their warping. When it is necessary to take the work out of the furnace and allow it to cool outside, it is better to use spent bone as a packing material, because the work will cool much more slowly, owing to the inability of the bone to conduct the heat away rapidly. Sometimes when work is heated for straightening or forging, the pieces are taken from the forge and cooled in double sheet-iron boxes that have $\frac{1}{4}$ inch of asbestos between them. The cover also is double, and is provided with a suitable hinge and counterbalance weight. As the work comes from the forging machine it is placed in the box, which when full is closed and left to cool, usually over night. While the stock cannot be as thoroughly annealed in this box as when heated to the proper temperature and allowed to cool in suitable packing material, the internal stresses will nevertheless be very greatly reduced.

8. Water Annealing.—Small pieces of steel are sometimes annealed by being heated to a cherry red and cooled slowly in the air until, when held in a dark place, only a very dull red is visible. The piece is then cooled in water. Although this will usually soften the steel, it is not as reliable a method as the slow-cooling process, and should be used only when there is not time to anneal by slow cooling.

HARDENING SOLUTIONS

9. Water for Hardening.—In many cases, clear, cold water is used as a hardening bath. The best results are said to be obtained from the use of soft water; rain water is used very largely. It is a mistake to suppose that the hardening bath should be as cold as possible; a very cold bath extracts the heat from the steel too quickly, and frequently causes cracks or breaks in the work. The temperature of the water for the general run of work should never be below 70° F., and for some purposes 80° to 90° would be better. In order to eliminate the stresses in hardened and tempered tools, they are frequently placed in a bath of boiling water after tempering. This relieves the internal stresses without seriously reducing the hardness of the tool; in fact, with most brands of steel, the reduction in hardness will not be noticeable.

10. Salt Solutions.—Various salts are added to water hardening baths for two purposes: first, to increase the rate at which the bath will extract the heat from the steel, and second, to prevent, as far as possible, the formation of steam on the surface of the work.

One of the simplest and, at the same time, one of the best hardening solutions is made by putting into rain water as much common salt as the water will dissolve. This solution is quite extensively employed by tool smiths.

A solution that is used by many and is claimed to give excellent results, though it is very poisonous and hence must be handled with great care, is made by dissolving $\frac{3}{4}$ ounce of rock salt, $\frac{1}{2}$ ounce of saltpeter, $\frac{1}{2}$ ounce of sal ammoniac, and $\frac{1}{2}$ ounce of corrosive sublimate in each gallon of water.

For some classes of work, a solution made of 1 ounce of chloride of zinc to each pint of water is used. This bath is recommended for making steel especially hard.

11. Oil as a Hardening Bath.—Various oils are frequently used in place of water as hardening baths. Mineral oils should never be used for this purpose, since they vary

so much in composition that it is practically impossible to obtain uniform results with them. Linseed oil is probably the most commonly used for a hardening bath. Other oils frequently used are lard oil, cottonseed oil, whale oil, and melted tallow. Sometimes two or more of the vegetable and animal oils are mixed in one bath, and melted resin may be added to the heavier oils. As a rule, hardening in oil leaves the work softer and freer from internal stresses. Oil hardening baths are sometimes heated to a high temperature so as to avoid too sudden chilling of the steel with the attendant danger of cracking or breaking the metal, or at least of introducing internal stresses that may result in cracks later. For some classes of work the bath is heated as high as 500° or 600° F., and the steel, when cooled in it, will possess the desired degree of hardness without any subsequent drawing of the temper.

12. Metallic Hardening Baths.—Mercury is sometimes used as a hardening bath, especially when handling very high-carbon steels and making special and delicate tools. On account of the fact that mercury has a greater heat conductivity than any of the hardening solutions previously mentioned, it will cool the work very much more rapidly. The fumes given off from the mercury bath are very poisonous, and for this reason there should always be provided a hood connected with a suitable chimney having a good draft, or to an exhaust fan, so as to remove these fumes as quickly as they are formed.

For hardening some classes of tools, molten tin is used for the bath. It melts at a sufficiently low temperature to permit it to be used for this purpose, and its relatively great heat conductivity causes it to cool the steel very rapidly. Another advantage of using tin is that it is not volatile at the temperature at which any of the other baths are, and hence the steel is not surrounded with a film of vapor, as in the case of all other hardening solutions. One advantage of this high-temperature bath is that the steel is not subject to such sudden stresses, and hence is not as likely to break in hardening.

METHODS OF TEMPERING

13. Tempering by Color.—When steel is heated to the proper temperature, usually a cherry red, that is, a temperature of about 1,200° to 1,300° F., and plunged into a hardening bath at or below 100° F., the piece will be so hard that a file will not cut it. It will also be brittle. As practically all cutting tools must possess some toughness, it is necessary to reduce the hardness to the lowest point consistent with the work expected of the tool, in order to increase the strength or toughness of the metal. The process of reducing the hardness is commonly called **drawing the temper.** This is done by heating the steel to a suitable temperature after it has been hardened. If the hardened steel is simply immersed in a bath of boiling water, the internal stresses will be relieved considerably, and the temper drawn very slightly.

When the temper is being drawn by color, advantage is taken of the fact that as a piece of steel is heated, certain colors that appear successively on its surface serve to indicate the temperature to which it has been heated. These colors, which are commonly called **temper colors,** have nothing to do with the hardness of the metal, but indicate the temperature to which it was last heated. The temperature to which it was heated determines the hardness.

14. Tempering in Oil.—For many classes of work, the temper colors are not needed on the finished product, and hence the tempering can be done more rapidly and uniformly by heating the work in a bath to the temperature that will give the required temper. **Oil-tempering** is usually performed by placing the pieces in a bath of oil and heating the whole to the proper temperature. When sufficiently heated, the pieces are removed from the oil bath and allowed to cool. For ordinary work, the temperature of the bath is read by means of a thermometer, and the work is introduced when the oil is at the proper temperature. The cold work reduces the temperature of the oil somewhat, and hence the

work must be left in the bath until the latter is brought back to the desired temperature. With heavy pieces, it is sometimes necessary to maintain the bath at the desired temperature for a considerable length of time. When the pieces are required to be clean and free from oil, they are removed from the bath of oil and placed in a kettle containing a hot solution of soda to remove the oil. They are then dried and cleaned in sawdust. Sometimes the work is taken directly from the oil bath and placed in the sawdust.

In order to avoid cracking or breaking, complicated pieces of work having sharp angles are sometimes placed in cold oil and then heated to the proper temperature.

EXAMPLES OF HARDENING AND TEMPERING

TAPS AND REAMERS

15. Heating of Taps and Reamers.—Formerly, when only a few taps were used in a shop and these were made in the tool room and hardened by the tool dresser, it was a very common practice to heat them in an open fire. Frequently, the teeth of the taps were filled with yellow soap, or some similar material, to protect them during heating and prevent them from being burned off. With the development of modern manufactures, the making of taps and reamers has become a specialty, and tools of this class that are made in the tool room are frequently hardened by the toolmaker himself, who uses a suitable gas heating furnace. For heating this class of tools, there are several methods in use. Sometimes they are heated in a tube or muffled in an ordinary forge fire or in a specially constructed coke furnace. In many cases it is best to allow the temperature of the furnace to fall somewhat below the heat required before introducing the tool, and then, as the steel absorbs the heat from the furnace, to increase the heat until the required temperature is reached. In all of these methods it is necessary to heat the steel as rapidly as is consistent with safety,

so as to avoid any chance of reducing the carbon in the surface. Taps and reamers are also frequently heated in a lead pot heated by gas or solid fuel; the principal objection to this method is that particles of lead sometimes adhere to the taps, especially in the case of square thread taps, and the presence of any such small particles of lead will cause soft places in the tool.

16. A properly constructed gas furnace, like that shown in Fig. 1, is probably one of the best devices known for

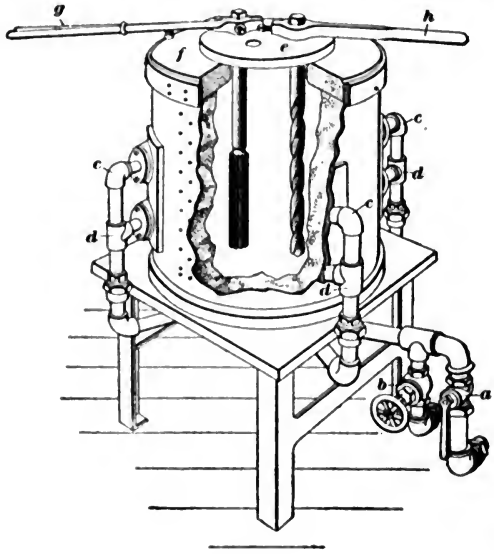

FIG. 1

heating taps, reamers, and other small tools. The furnace consists of a cylindrical metal casing lined with fireclay or firebrick and provided with three or four burners that project the mixture of oil and gas into the furnace, so as to cause the flame to circulate about the work. The air valve is shown at *a* and the gas valve at *b*, the air being under a suitable pressure, usually about 1 pound per square inch. The burners are shown at *c* and *d*. In the center of the top *f* of the

furnace there is a large hole covered with a circular plumbago cover *e*, which is pierced with holes to put in the work, the latter being held by suitable tongs *g* or by special dogs *h*. This furnace is adapted only to comparatively long work, but has the advantage of keeping the work straight and insuring a uniform heat. When the taps or reamers are to be hardened throughout, including the shank, and also other small work, it is necessary to use a lead bath or a muffle or oven furnace.

17. Pack Hardening.—The pack-hardening process is used to prevent the fire from reducing the carbon in the surface of high-carbon steel. In this process, iron boxes are used and the work is packed in charred leather, granulated charcoal, or sometimes a mixture of one or both of these with charred hoofs and horns. Care must be taken to see that no piece of steel is near the walls of the box; ordinarily, they should be kept at least an inch away. The box is closed with a cover that is sealed with fireclay. After the clay used in sealing the cover has dried, the box is placed in a suitable furnace, brought to the desired temperature, and held there a sufficient length of time to bring the entire contents of the box to the required degree of heat. When beginning operations of this kind, it is frequently necessary to ascertain when the box is heated throughout. In order to do this, a device called a **telltale** is used. A number of $\frac{3}{16}$-inch wires are run from the top to the bottom of the box through $\frac{1}{4}$-inch holes in the cover. If, after the box has been in the furnace some time, one of these wires is of an even red throughout when withdrawn, the box is left in the fire an hour or more longer; the time necessary for the best results can be determined by experiment. Great care must be taken during this heat to be sure that the temperature of the furnace is not allowed to rise above the required degree. If the first telltale piece withdrawn does not show the desired temperature, others must be withdrawn at intervals of 10 or 15 minutes, until the desired temperature is shown; the timing should begin from this point. When the heating is

complete, the box is removed, the cover taken off, and the pieces removed and quenched, one at a time.

18. Cooling Baths for Taps and Reamers.—In some works, a salt-and-water solution is used for hardening taps and reamers, while in others, soft water alone is used. In the case of taps, especially those that have been pack-hardened, it is well to use a bath of raw linseed oil. In any case, the pieces should be moved up and down in the bath to insure contact at every point and to prevent soft spots owing to

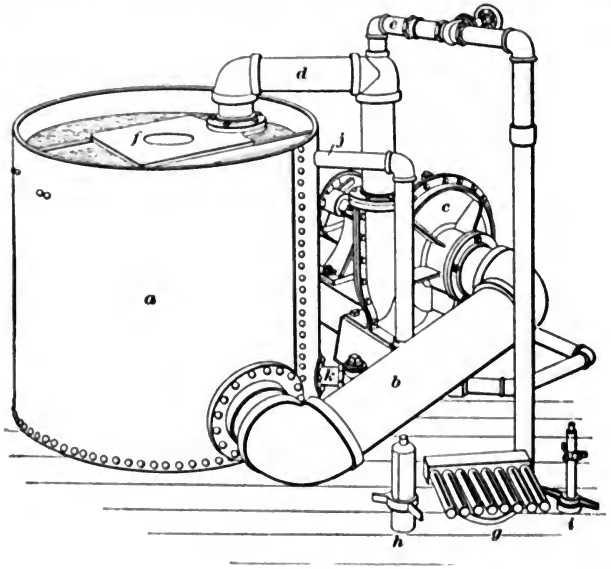

FIG. 2

the accumulation of steam. In some shops, special hardening tanks, in which the water or oil is circulated by suitable circulating pumps, are used.

19. Special Hardening Tank.—A tank specially designed for hardening tools is shown in Fig. 2. It consists of a cylindrical tank *a* containing a hardening solution, which is pumped out of the bottom of the tank, through the pipe *b*, by the centrifugal pump *c*, and back into the tank through the

pipe *d*. Once the solution enters the tank, the direction of the flow is governed by the character of the work to be hardened; in the case of cylindrical work, proper fixtures may be used to direct the water against the surface of the work in jets. The work is put in through the hole *f* in the center of the tank. Provision is made for supplying any additional water that may be required from the regular waterworks system through the pipe *e*. An overflow is provided at *j*, and a drain pipe at *k*. For hardening the surfaces of flat dies, the special attachment shown at *g* is used, being placed some distance below the surface of the water and arranged to direct a series of flat jets against the bottom of the die. The special fixtures shown at *h* and *i* are used when hardening the inside of cylindrical pieces, rings, or cutting dies.

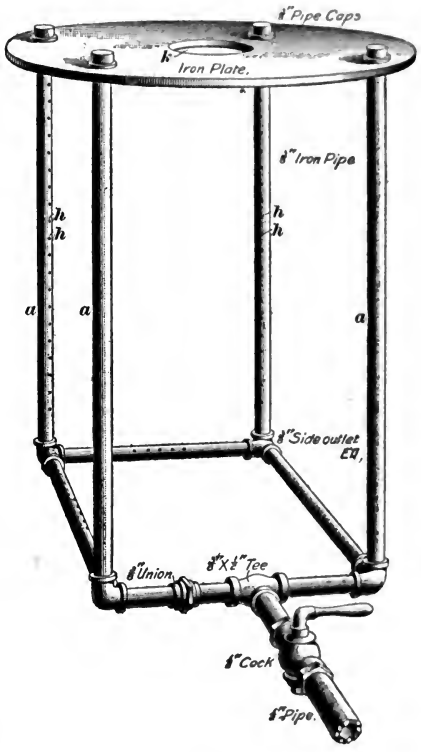

FIG. 3

This tank can be used with clear, cold water, with a salt solution, or with oil. When the same solution is used over and over, an auxiliary tank for cooling it may be placed beside the hardening tank, the solution being allowed to overflow from the hardening tank into the auxiliary tank. Suitable cooling pipes, through which cold water is conducted,

are arranged in the cooling tank, from which the pump draws its supply.

20. In some cases where only a limited amount of hardening is done, a spraying device of the form shown in Fig. 3 may be used. This is simply connected to the water main and the work is introduced through the opening *k* in the iron plate at the top of the device. The pipes *a* are pierced with holes *h* that direct the jets of water against the work. Frequently, the best results can be obtained by submerging the whole device in water, when the jets will serve to direct the water against the surface of the work and so break up any steam pockets that might form and have a tendency to cause soft spots on the work.

21. Tempering of Taps and Reamers.—After the pieces have been hardened and polished, they may be tempered by heating over a fire, over hot metal, or in hot sand, until the desired color appears, when they can be quenched in water or oil, or left to cool in air; the last process will usually leave them the softest. They can also be tempered by being placed in a bath of oil and bringing the oil to the required temperature.

During the hardening process taps and reamers are frequently sprung out of true; they can be straightened by pressure after being heated to a temperature somewhat lower than that at which they are to be drawn. The heating may be done in a bath of hot oil, but it is claimed by some toolmakers that better results are obtained by the following method: The tap is placed between the centers of a lathe with the high side toward the tool post. The end of a bar of iron, clamped in the tool post, is brought to bear against the high side of the tap, which is then covered with lard oil and heated by a Bunsen flame burner until the oil begins to smoke. The tool post is then run forwards, bringing the bar of iron against the high side of the tap and springing it straight, or even bending it slightly in the opposite direction. The tap is then chilled by pouring water over it, when it will be found to be straight or only slightly bowed. As a rule,

the tool smith does not have the use of a lathe, and hence straightens the tap by heating to the proper temperature over a fire, over a flame, or in oil, then bending the tap by hammering between blocks of hardwood. After the tap is straightened, the temper is drawn in the usual way to the desired color or to the desired temperature in oil.

TWIST DRILLS

22. Heating of Drills.—Twist drills may be heated in the gas furnace shown in Fig. 1, but the lead pot is very commonly used for this purpose, especially for short drills. A form of lead-pot furnace is shown in Fig. 4. The temperature of the lead is kept between 1,400° F. and 1,450° F. by gas flames between the lead pot *d* and the casing *c*; *f*, *f* are holes for lighting the gas. In all such heating operations, it is well to exclude the daylight as far as possible, and to work by a few incandescent lights giving just enough light to enable one to work. Under such conditions, the temperature can be judged very closely, and the eye must always be depended on to some extent, even when pyrometers or heat gauges are used.

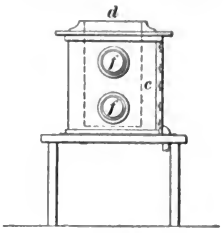

FIG. 4

When the lead heating pot is used, the surface of the lead should be covered with a little powdered charcoal to exclude the air. Sometimes, in place of charcoal, a mixture of salt and potassium cyanide is used to top off the lead to protect it from oxidation. The smaller size drills are frequently placed in clamps holding several, and all dipped into the pot at once. Some manufacturers prefer to heat twist drills in muffles filled with charcoal, so as to avoid loss of carbon from the surface of the steel.

23. Hardening Drills.—Short or standard length twist drills will not spring much if dipped vertically into a suitable hardening bath, which is generally water or some brine solution. The bath should be agitated in some way, usually

by having a circulating pump attached, somewhat after the manner shown in Fig. 2. Very long twist drills show a tendency to spring when hardened; one method used to overcome this is as follows: The drill to be hardened is placed in a long pipe muffle, which is given a partial rotation every few seconds during the heating of the drill; this insures a uniform heat. The shank of the drill is next placed in an ordinary pneumatic drilling machine, and rotated very rapidly. The drill is then lowered rapidly into the water, care being taken to keep it vertical. The rapid rotation of the drill tends to prevent the formation of steam pockets. When the drill is heated in a horizontal position, care must be taken to see that it is not bent in bringing it to a vertical position.

24. Tempering Drills.—Twist drills are usually tem-

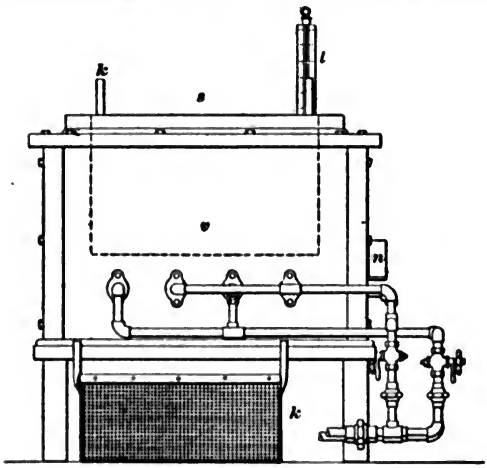

FIG. 5

pered in a bath of linseed oil, heated by a suitable fire. A furnace suitable for this purpose, Fig. 5, consists of a metal casing v, in which is suspended an oil tank s containing a wire basket. In the upper portion of the figure at k is one of the handles of the basket; while on the floor in front of the furnace an empty basket k is shown. Air and gas are supplied by the pipes shown leading to the burners

located on each side of the furnace, the gas being lighted through a hole near the plug *n*. The temperature of the oil bath is gauged by the thermometer *l*. When a basket full of work is placed in the oil, the temperature of the bath will fall, and care must be taken to see that sufficient time is allowed for both steel and oil to come to the desired temperature. The work can be removed and cooled and cleaned by the methods already described.

MILLING CUTTERS

25. Heating Milling Cutters.—Milling cutters are of two general classes; first, those made from high-carbon steel, and second, those made from low-carbon steel and rendered hard enough for cutting by case hardening. Most milling cutters are sufficiently complicated to require careful treatment, both in heating and hardening, in order to prevent cracks and to insure sharp edges; this is especially true of formed milling cutters. A furnace designed for heating tools of this kind, Fig. 6, consists of a casing *a* that surrounds both the combustion chamber and the heating chamber, the two chambers being separated by a fireclay slab *b*. The burners *c* are arranged along both sides of the furnace and are supplied with air and gas through suitable pipes controlled by the valves *d* and *e*. The gases mingle and partially burn beneath the slab *b*, the products of combustion ascending around the edges of the slab into the space where the work is located. The work *f* is supported on a block *g* in the center of the furnace. Care must be taken to see that a reducing flame only is present in the heating chamber. The front of the furnace is closed by a door *h* provided with a small hole *i* for observing the temperature of the work. The burned gases escape from the furnace through a vent at *j*.

The supply of air for the furnace passes through an air drum *k*, to which is attached a relief valve *l* for controlling the air pressure, which may be varied, as required, by weighting the valve with small perforated $\frac{1}{4}$-pound disks.

which are slipped on the end of the vertical valve stem. Two disks are required to secure an air pressure of 1 pound, the unweighted valve providing a minimum pressure of ½ pound. The required air pressure is reached when the valve lifts and steadily blows off while the air cock *d* is wide open. The work should be placed in, and taken from, the furnace with special tongs that bear on the sides of the cutter without touching the teeth. If care is taken in governing the heat, such a furnace will be found very efficient for heating large carbon-steel cutters.

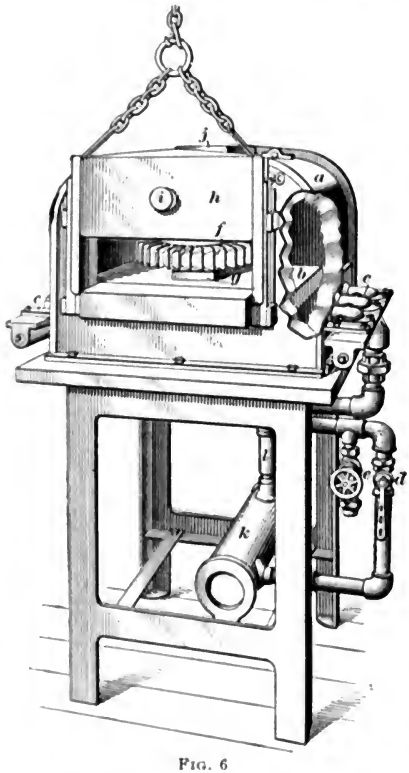

FIG. 6

When the shop is not provided with a furnace like the one just described, very successful work may be done with the aid of a lead pot, especially with a large number of small cutters. Good work may also be done in an ordinary fire, provided that it is deep enough to insure freedom from oxidation by the blast. The tool smith should always be sparing with his blast, and should not economize too closely with his fuel.

26. Hardening Milling Cutters.—After the milling cutter has been heated, it should be taken from the fire and plunged into the bath edgewise. In most cases, it will be found best to take it from the fire with the tongs, but to use

a hook for lowering it into the bath, because the tongs will prevent the bath from coming in contact with the steel at one point on each side of the body of the cutter and these points will harden after the balance of the cutter is hard, thus introducing serious stresses and usually warping, if not cracking, the piece. The hook, on the other hand, is in contact with but a line on the inside of the hole through the cutter and can have but little influence during the hardening. Milling cutters are usually hardened in clear water or in a brine solution.

27. Tempering Milling Cutters.—When only a few cutters are made, they are usually tempered by placing them on a bar of metal heated to a dull red heat, the bar being at least $\frac{1}{8}$ inch smaller than the hole. The bar is rotated slowly, causing the cutters thereon to rotate, and distributing the heat more uniformly. The cutters should be polished before this is done, so that the temper colors may be observed readily as they run from the hole outwards. When the proper color, usually a dark straw, appears at or near the points of the teeth, the cutter is dropped edgewise into a bath of cold water. The advantage of this method of tempering is that it produces a cutter having a tough center and a tough metal around the roots of the teeth, while the points of the teeth are hard enough to do the work. Of course, each succeeding grinding of such a cutter will expose softer metal.

The smaller milling cutters, when made of carbon steel, are generally heated and hardened as described above, and then tempered in oil. For small or delicate forms, this gives even stronger teeth than the method just described, and cutters thus tempered possess the added advantage that successive grindings do not expose a softer metal.

28. End mills and shank mills are heated, hardened, and tempered in the same manner as taps, with the exception that a shank mill sometimes has its temper drawn by placing the shank in a hot nut or ring and allowing the heat to run down the shank and out to the roots of the teeth. When the

proper color appears on the teeth the tool is quenched. The disadvantage of this method is that it leaves a soft, weak neck, and in many cases, especially with slender tools, it will be found very much better to temper by heating in oil.

29. In hardening any milling cutter or hollow mill having a hole through it, if the piece has not been annealed after drilling the hole, it should be removed from the fire when red hot and then allowed to cool slowly until the red has entirely disappeared, when it can again be placed in the fire, slowly heated to the required temperature, and plunged into a bath of tepid water or brine, working the piece around until it stops singing. It should then be removed and plunged into a bath of oil, where it should be allowed to cool. The internal stresses should then be removed by holding the cutter over the fire until it is warm enough to produce a snapping or sizzling noise when touched with a moistened finger. It can then be laid aside and the temper drawn at any convenient time. Sometimes the work is taken from the hardening bath when it ceases singing and placed in a bath of oil or boiling water, and later taken from this and allowed to cool.

LARGE FLAT WORK

30. Plane Irons.—The irons for planing wood by hand, including the broad bits for jack-planes and jointers, as well as the narrower bits for molding planes, were formerly made by welding a tool-steel face to a piece of wrought iron. At present, such bits, or plane irons, are made from a fine quality of rolled or cast steel. The blanks are sheared or punched to the proper size and any necessary machine work is done on them, including grinding the bevel. The cutting end of the bit is then heated to a cherry red by placing it in a lead pot. To insure heating to just the right distance from the cutting edge, the bits are held crosswise, in a special pair of tongs, in such a way that when the tongs rest on the edge of the lead pot the bits will extend into the lead the correct distance. Several bits may be heated at one time; when taken

from the lead, one at a time, they are dropped into a tank of salt water or plunged with the tongs, moving the pieces about rapidly until cool, then allowing them to drop to the bottom of the tank. The bits drop into a wire basket, by which they can be lifted out when a sufficient number have accumulated.

31. The temper is drawn between hot-iron plates pressed together by a cam-motion hand press, which not only serves to bring the plates into contact with the plane iron, but also assists in flattening it. The temper is regulated by the length of time the bit is between the plates. Occasionally, one of the bits is tested for hardness with a file. It is claimed that greater uniformity of temper can be obtained in this manner than is the case when judging by color.

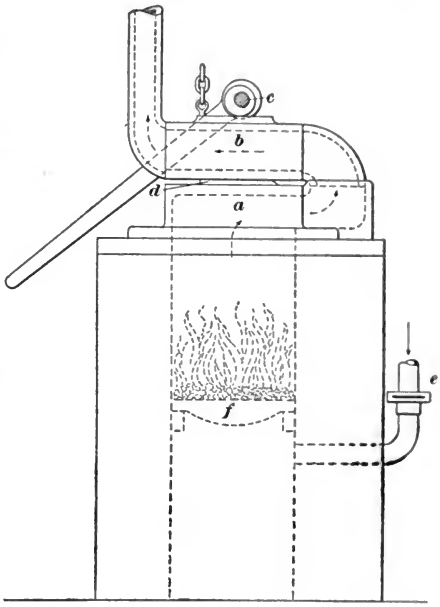

FIG. 7

32. The special furnace and clamping device for this work is shown in Fig. 7, some of the details being omitted to avoid complicating the sketch. The products of combustion from the coke or hard-coal fire beneath pass through both plates *a* and *b* on their way to the chimney. The cam-shaft *c* is supported by brackets attached to the lower plate *a*, but not shown in the sketch. The upper block *b* is provided with a counterweight so that it can be raised to put in the work. The operation is as follows: The block *b* is raised,

the piece *d* to be tempered are introduced, the block *b* lowered and clamped firmly in place by means of the cam on the shaft *c*. After the work has been exposed to the heat a sufficient length of time, the block *b* is raised and the work removed. For maintaining the fire, a forced blast is used, the air supply being controlled by the valve *e* in the pipe through which the air is introduced below the grate *f*.

33. Circular Saws for Wood.—One of the best exam-

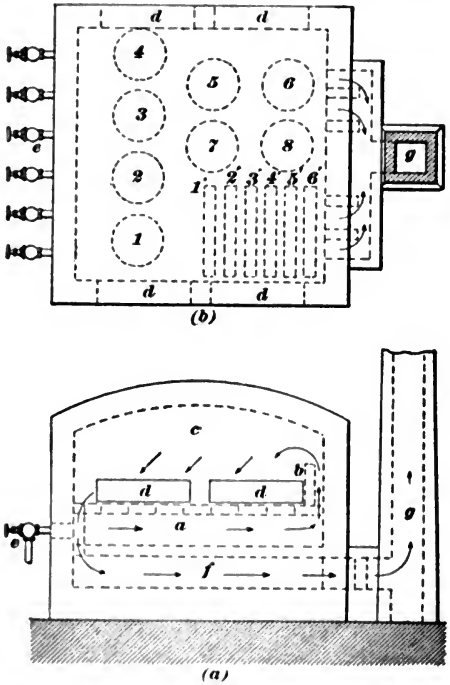

FIG. 8

ples of hardening and tempering large flat work is that of circular saws for cutting wood, which are hardened in the following manner: After the saw blank has been cut to shape and all preliminary machine work done on it, it is heated to a light cherry red on the flat bed of a large furnace. Two

views of such a furnace are shown in Fig. 8, (*a*) being a side view and (*b*) a plan view. Several saws are placed in the furnace at one time, and are frequently moved and turned to secure an even heating. They are introduced first at the coolest parts of the furnace and gradually moved to the hotter parts in the order shown in Fig. 8 (*b*), *1* being the last saw to be placed in the furnace and *8* the first. A series of cross-cut saws are also shown in Fig. 8 (*b*); *1'*, *2'*, *3'*, *4'*, etc. indicate their successive positions in the furnace. The furnace is about 14 feet square and is heated by oil burners *e*, the flame from which passes through the flue *a* under the hearth, up over the bridge wall *b*, into the heating chamber *c*. It then passes down through openings in the hearth to a passage *f*, near the base of the furnace, that leads to the chimney *g*. Four large openings *d*, *d* are closed by firebrick-lined doors lifted by a hydraulic cylinder.

When the saw has reached the desired temperature, it is quickly removed from the furnace, placed in a vertical position in a supporting frame, and lowered, edgewise, into the hardening bath; generally, this bath is composed of a mixture of whale oil, tallow, resin, and beeswax. After the saw is taken out of the bath, it is cleaned by scraping and then scoured with sawdust.

34. For drawing the temper, the hardened saw is placed between two flat, circular, cast-iron plates in a horizontal position, the upper plate weighing several tons and being lifted by means of a hydraulic cylinder. The reason for using such a heavy plate is to take out the buckling due to hardening and to give a uniform and close contact of the saw with the hot plates. The plates are kept evenly heated by revolving them in a furnace heated by a series of carefully controlled gas jets. The degree to which the temper is drawn is regulated by the time the saw is left between the plates, the hardness being tested with a file after removing the work from the plates. If the saw is too hard, it is returned to the plates. Saws for wood are drawn to a temper equivalent to a blue temper color, but usually in this

method no attention whatever is paid to the color, the file test being used to determine their hardness.

35. Cold Saws for Metal.—Cold saws are heated and hardened in the manner just described for wood saws, but sometimes the temper of the cold saw is not drawn at all, it being left just as it comes from the oil bath; at other times, the temper is drawn to a straw color, by means of heavy plates, as described in connection with the wood saws.

DIES

36. Under the head of dies may be classified a great variety of tools, embracing all types from the heavy drop-hammer dies to the delicate and intricate punching and trimming dies for sheet-metal work. Drop-hammer dies are usually heated in a special furnace or face down in a coke fire, the face only being brought to the desired temperature. They are then hardened by being placed face down on suitable supports, with the face just below the surface of the hardening bath. The hardening solution is then forced against the face of the die in a series of powerful jets to prevent the formation of steam pockets and insure rapid cooling of the work. Sometimes the die is placed face up and subjected to the action of a series of jets of water. After hardening, the temper is drawn to the required degree by heating over a fire or over hot metal.

37. With thinner and more intricate press dies, greater care must be exercised in hardening and tempering. Usually these dies can best be heated in some form of oven furnace. If the die contains any screw holes or small holes that do not require hardening, they should be stopped with fireclay, so as to avoid as far as possible the risk of cracking the die. The die may be hardened in water or brine. Immediately after hardening, it should be removed from the bath and slightly warmed to avoid cracking. This reheating may be done by immersing the piece in boiling water or by holding the die over the fire until it is heated to such a temperature

that a few drops of water sprinkled on it will immediately turn into steam. This temperature will not be sufficient to make the temper colors appear, but will aid in reducing the tendency of the die to crack.

38. A die made from a blank cut from a bar of steel, and machined and worked out without annealing is likely to crack during the hardening process, especially when the die is of irregular outline. For this reason, the stock for dies should always be annealed when possible. If it is not possible to anneal the stock before the die is machined to shape, the finished die should be heated to a uniform red heat, removed from the fire, and allowed to cool until black. It should then be reheated to the proper temperature and hardened.

39. The method used for drawing the temper of a die depends very largely on the form of the die and the use to which it is to be put. Cutting dies are drawn to colors ranging from straw to blue, depending on the work they are to perform. Sometimes, in the case of cutting dies, one of the dies is made much harder than the other, so that the harder die can be used to trim the softer one to exact form. This is an advantage when repairing the die to take up wear. After peening out the worn edge, the irregularities are removed by the harder die. The die on which the most work has been done should be the hard die, and the cheaper one the soft die. Thus far no distinction has been made between the terms die and punch, the term die being used to cover both parts of the tools used for cutting and forming metal.

With forming, embossing, or coining dies, the temper is such that the metal is usually much harder than in the case of cutting dies, drawing dies sometimes being made as hard as possible.

SPRINGS

40. Flat Springs.—Under the head of flat springs may be included every variety from the small springs in locks and firearms to the heavy leaf springs for supporting locomotives. When of uniform thickness, the smaller springs

are usually shaped from sheet metal of the required thickness. Sometimes the steel is annealed and bent to shape; but in other cases it is heated red hot and bent to shape, frequently by the use of dies. In the case of large tapered springs, the metal is either forged or rolled to shape. After the steel has been given the required taper, it is bent to a templet, or is given the desired form by the use of dies, when it is ready for hardening. As a rule, the steel will harden more uniformly if first annealed. This can be accomplished by packing in boxes with spent bone or a mixture of spent bone and charcoal, bringing to the required heat in a furnace, and then allowing the springs to cool in the boxes. Sometimes large springs are annealed by heating them separately in a suitable furnace, then placing them in a box of warm lime, where they are allowed to cool slowly.

41. Large springs are hardened separately; they are first heated to the required temperature and then cooled in a suitable bath. No universal rule can be given for the bath to be used, as this depends very largely on the character of the steel under treatment. For some steels, a bath of raw linseed oil is used with great success, while some spring makers use a bath composed of 50 parts of sperm oil, 49 parts of neat's-foot oil, and 1 part of resin. Sometimes it is better to harden in a brine solution, and at other times clear water will give the best results. There are some brands of steel that require quenching in a bath of boiling water to secure the best results; this is especially true of some of the cheaper brands.

Large quantities of very small springs are frequently treated in bulk, being heated in some form of box or wire basket, either with or without packing material, and quenched by being dropped all together into the hardening bath.

42. After springs are hardened, they must be tempered, which is done by several methods. Large springs are very frequently drawn to color by polishing and then heating over a fire, a hot plate, or a sand bath. For most work they

should be drawn to a full blue, sometimes to a very dark blue. They should then be plunged into oil or water to fix the temper. Small springs are also frequently treated the same as large springs, except that the temper is drawn over a gas flame.

The temper of springs of fairly large dimensions is frequently drawn by a process known as **flashing off.** If linseed oil is heated to about 600°, it will burn with a continuous white flame that can be blown out only with difficulty. If the temperature is slightly below this, the fumes from the oil will burn if a piece of lighted paper is held over the oil bath, but will go out as soon as the lighted paper is removed. In tempering springs, advantage is taken of the fact that the point at which spontaneous and instantaneous flaming of the oil occurs corresponds with the temperature to which the temper of the spring should be drawn. The springs are first dipped into oil and then held over the fire, a flame, or a piece of hot iron, until the oil on the spring ignites. The spring is then plunged into a bath of oil for a moment to extinguish the flame and to cool the surface of the spring, and the operation repeated. By doing this several times, the spring is drawn to a uniform temper; flashing off three times is usually sufficient for any spring. If the oil were allowed to continue to burn on the surface of the spring, it would result in drawing the temper too far, and in softening the spring to a degree at which it would lose its elasticity. Care must be taken to hold the spring far enough from the fire so that the oil will not ignite until the temperature of the spring has reached the temperature of the flashing point of the oil.

The temper of springs of small dimensions is frequently drawn by placing them in a bath of oil and heating the oil to about 600° F.; for some work, a few degrees less is sufficient.

43. Coiled Springs.—For some classes of work, coiled springs may be made by taking high-temper spring wire and coiling it on a suitable mandrel in an engine lathe; these springs will frequently give good results, especially for tension springs. For compression springs, however, and

especially for those of large dimensions, the metal is usually coiled while hot and is then hardened and tempered in a manner similar to that used for flat springs, the heating being accomplished in a suitable furnace. The temper of large spiral springs is usually drawn by flashing off. Where proper facilities are at hand small springs are usually tempered by heating in oil.

SELECTION OF STEEL

44. A piece of properly tempered tool steel has a finer grain than the bar from which it was made, but the fineness of the grain alone is not an indication of the degree of hardness. If two bars, one containing about .8 per cent. of carbon, and the other containing about 1.1 per cent. of carbon, be properly hardened, the appearance of the fractures of the two bars will not be very different, but the bar containing the higher percentage of carbon will be the harder, while the one containing the lower percentage of carbon will be the tougher. The percentage of carbon in steel should be graded according to the purpose for which it is to be used, and an order for steel should be accompanied by a statement as to the purpose for which the different bars are to be used, so that the maker may be able to select steel containing the proper percentage of carbon. Most manufacturers of carbon steel make at least twenty-four grades. If it is necessary for a cutting tool to be harder than a given grade of steel will make it, a steel containing a higher percentage of carbon should be used. Steel for many forms of dies and punches and for taps can be of a lower grade than that required for certain forms of reamers or cutting tools for cutting very hard material; for turning chilled iron, the steel must have practically the highest obtainable percentage of carbon.

45. Whether or not the steel contains harmful elements or impurities is another point to be considered when selecting it. For some classes of work the steel must contain practically nothing but iron and carbon; nothing but a high-grade crucible steel can fulfil these requirements. For many

purposes, however, Bessemer or open-hearth steels are suitable for tools that do not require a very high percentage of carbon. A careful study of the conditions will usually make it clear as to whether a very high grade of steel, costing, say, 50 cents per pound, is required, or whether a cheaper grade, costing, probably, 10 cents, or even less, can be used.

46. The lower the percentage of carbon, the higher is the hardening heat of the steel. Ordinarily, steel makers are called on to furnish steel without adequate specifications, and hence they have adopted the plan of varying the carbon with the size and form of the bar. All users of steel, however, should, as previously stated, be careful to state the purpose for which the steel is to be used, and as a result they will usually obtain steel much better suited to their work. It is not always advisable to purchase low-priced steel, as usually the lower the price the poorer is the quality. Frequently, the cheap steels are the off-heats or the steels containing a large percentage of impurities.

HIGH-SPEED TOOL STEELS

HEAT TREATMENT OF HIGH-SPEED TOOL STEELS

47. High-speed tool steels require very different heat treatment from that necessary with carbon steels. When the tool is to be hardened, it is usually heated to a white heat, that is, until the scale of the surface appears molten. It is then cooled in a blast of cold air. In the Taylor-White process for treating steels of this class, the part of the tool to be hardened is heated white hot, and then plunged into a bath of molten lead maintained at a red heat, care being taken to have the bath of sufficient volume that its temperature will not rise perceptibly while the tools are in it. The steel is cooled rapidly to the temperature of the lead bath, because the lead transmits heat rapidly. The tools are then removed and cooled to the temperature of the air.

48. When this class of steel was first brought out, it was supposed that it would be used for roughing tools for the lathe and planer, and that it could not be used extensively for tools made by machinery, as milling cutters and drills. Subsequently, it was discovered that if the steel was properly packed and heated to a white heat and then allowed to cool slowly, it would be soft enough to be machined. In packing the steels, they should be placed in a pipe or box and surrounded by small pieces of coke or charcoal; the box should then be sealed with fireclay, care being taken to leave vents for the escape of the gases given off by the coke. The heating furnace should first be heated to a white heat, the packing cases introduced, and left from 1 to 3 hours, depending on the size of the pieces. They should then be slowly cooled with the furnace, or by being buried in some nonconducting substance. When cold, the steel will be soft enough for machining. The pieces are then machined to shape and hardened.

49. The heating for hardening high-speed steels can be accomplished in a number of ways. The pieces may be suspended in a gas furnace similar to that shown in Fig. 1, a special furnace capable of maintaining a very high heat being used. Great care must be taken that no oxygen strikes the steel while it is being heated. The work can also be heated in a lead pot, the lead being contained in a graphite crucible and covered with powdered charcoal, and brought to a white heat. If the heating is done in an ordinary blacksmith's forge, care must be taken to avoid uneven heating of the bottom of the crucible, as the blast of the forge may act as a blowpipe on one spot and burn a hole through the crucible. The steel may also be heated by packing in pipes or boxes, as already described for annealing, and bringing to a white heat. Whichever method is used, care must be taken to plunge the steel into a bath of oil immediately on taking it from the fire, lead pot, or packing box. Linseed oil, sperm oil, or fish oil may be used for this purpose. If the work is exposed to the air, it will scale and so change its size.

50. After the steel has been hardened, it will be found too brittle for such tools as taps, drills, milling cutters, etc., and hence the temper must be drawn. If drawn by color, it will be necessary to observe a new set of temper colors; for even the blue heat of carbon steel is not sufficient for high-speed tool steel and the heat must be continued until the metal reaches a greenish tint. The piece is then allowed to cool in a dry place, where it will not be affected by drafts.

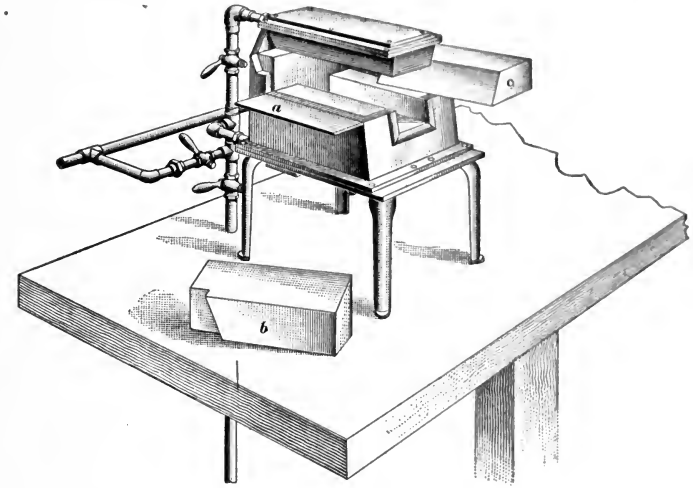

FIG. 9

Usually this will leave it soft and tough enough for most purposes, but in some cases it must be heated to a black heat, or until the red is just visible in a dark place. When a lead pot is used for heating the steel, it is well to bring the piece to a bright red or orange heat in a furnace before introducing it into the lead, as this will avoid extremely sudden changes of temperature which might crack or break the steel.

SPECIAL FURNACES FOR HARDENING AND TEMPERING

51. Fuel for Hardening Furnaces.—The ideal fuel for a hardening furnace is one the supply of which can easily be controlled, so as to maintain a uniform temperature and at the same time insure a reducing fire under all circumstances. The only way this can be accomplished with a solid fuel is by having a very deep fire and a grate or tuyère carefully designed to prevent the localization of the blast, which might force unburned air through the fire. The difficulty of maintaining a uniform heat with solid fuel, and also the fact that a furnace using the solid fuel cannot be used intermittently, has resulted in the use of gas in most cases for heating work for hardening and tempering.

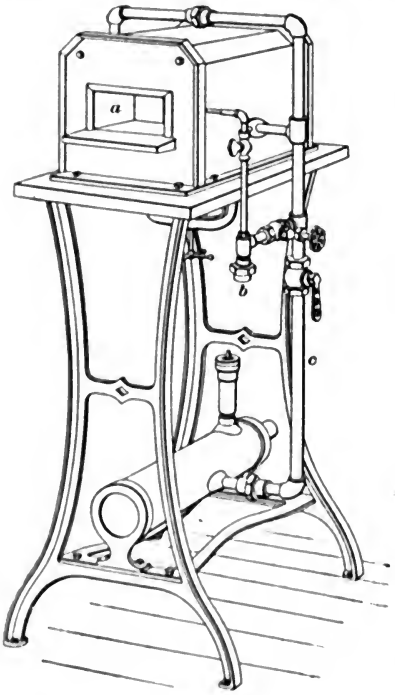

FIG. 10

52. Bench Forge.—In the tool room for heating small work, the gas forge shown in Fig. 9 will be found very useful. This style was first designed for brazing thick sheets of brass, by placing the joint in the center and resting

the sheet on iron flanges *a* that project on each side of the furnace. For hardening steel, two firebricks *b*, *c* are ordinarily placed on the flanges *a*, forming a heating chamber $2\frac{1}{2}$ inches wide, 2 inches high, and 6 inches deep. This furnace is heated by three burners, one at the top and one on each side, to effect an even distribution of the heat and also to enable the furnace to be heated up quickly.

53. Tool-Room Forge.—When work of medium size is to be heated, the forge shown in Fig. 10 will give good results. It is commonly known as a **tool-room forge** and is made in several sizes, with corresponding variations in the size of the heating chamber. The work is placed in the heating chamber through the door *a*. The two burners, one on each side of the furnace, are supplied with gas through the pipe *b*, and with air through the pipe *c*, the supply of both air and gas being controlled by suitable valves. Such a furnace in the tool room will enable the toolmaker to harden practically all his tools. The advantage of having tools hardened in the tool room is that the toolmaker knows exactly the character of the steel used for each piece, and hence can give it suitable treatment.

54. Circular Annealing and Hardening Furnace. Many special forms of gas furnaces have been developed for special work. For heating large circular work, for annealing or hardening, a furnace of the form shown in Fig. 11 will be found very convenient. This furnace consists of a circular metal casing *a* with a suitable firebrick lining *b*. The burners *c* are arranged in such a manner that they enter the furnace tangentially so as to cause the flame to travel around in the furnace, thus insuring uniform distribution of the heat. The cover consists of an iron band *d*, inside of which are clamped firebrick tiles *e*, and is so arranged that, by throwing back slightly the lever *f*, it will be lifted off the furnace by the chains *g*, when it may be swung to one side, giving access to the work and to the entire top of the furnace. The work *h* is supported in the center of the furnace on suitable firebrick tiles.

55. Oven-Annealing Furnace.—In any shop where a considerable amount of high-carbon steel is used, it is necessary to make provision for the annealing of the steel in packing boxes. A furnace suitable for heating such packing boxes, shown in Fig. 12, consists of an oven below

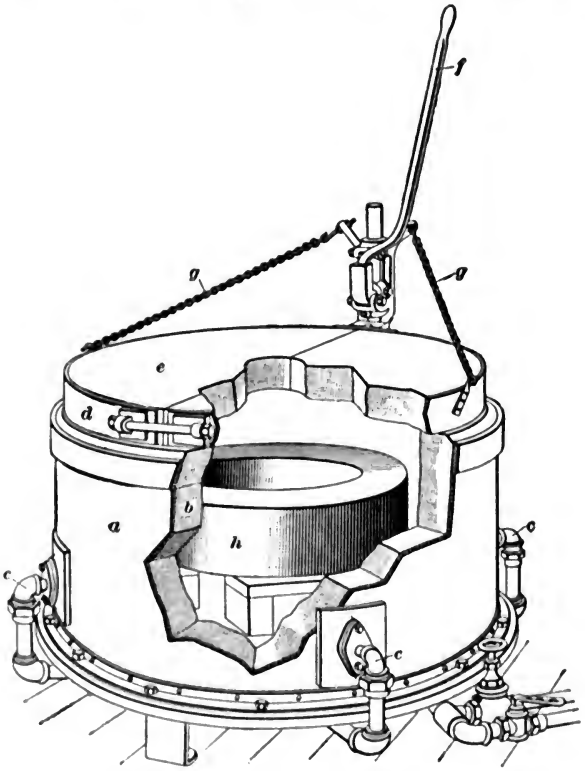

FIG. 11

whose tile floor *a* there is a combustion chamber with a series of burners *b* arranged along each side. Iron bars *c* are usually placed on the tile floor to protect it from wear as the packing boxes are slid in and out. The door *d* should be arranged with a counterweight, so that it can be opened and closed easily. The products of combustion

escape through the openings e, e in the top of the furnace. This furnace is of sufficient capacity to take in boxes or pots large enough to hold any ordinary work.

56. Tumbling-Barrel Furnace.—To insure a uniform temperature for small work, many special types of furnaces have been developed. One of these, shown in Fig. 13, is used for heating steel in drawing the temper. The furnace

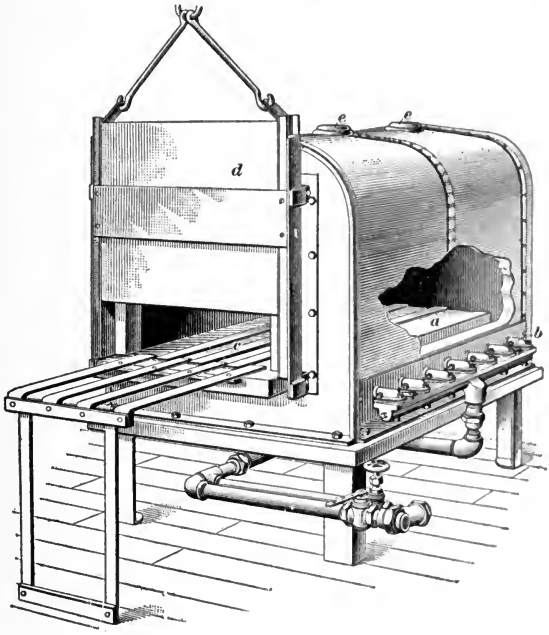

FIG. 12

consists of an ordinary oven, with a metal casing a and burners b, b, the temperature of which can be regulated by means of a thermometer c. The temperature registered by the thermometer will not be the same as the temperature of the interior of the furnace, but the proportion between the two will be always the same, and if experiment has proved that a certain temperature on thermometer c is right for a certain class of work, that temperature can be recorded and

always used when hardening the same class of work. The front of the oven is closed by a door *d* when the furnace is in use. Inside the furnace there is a tumbling barrel *e*, supported on a shaft passing through the back of the furnace;

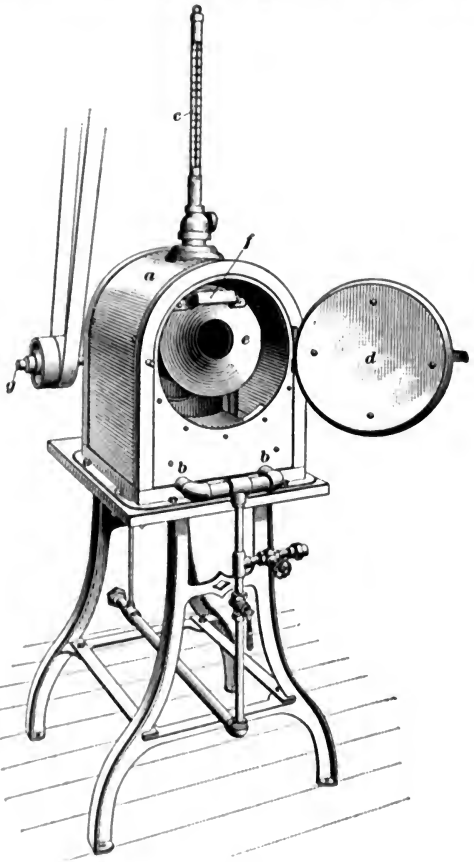

FIG. 13

this tumbling barrel can easily be detached and lifted out of the furnace by means of the handle *f*. The supporting shaft for the tumbling barrel is rotated by a pair of bevel gears, one of which is on the shaft *g*. When in use, the work is

dropped into the tumbling barrel, or drum, *e*, and the machine started. The work can be observed from time to time by opening the door *d* and noting the color of the work, or by removing a piece and trying it with a file. When the proper conditions have been determined, it is not necessary to open the door *d* until the thermometer *c* has indicated the required temperature for a sufficient length of time to draw the work to the desired temper.

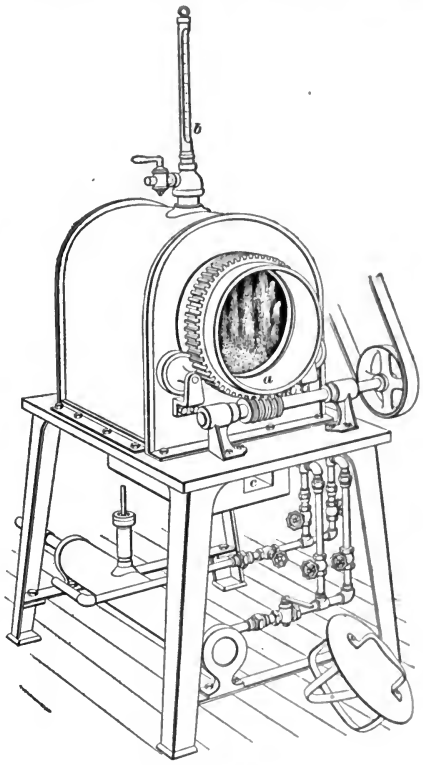

FIG. 14

57. Sand Temper-Drawing Furnace.—In some cases, better results can be obtained in drawing the temper of the work by exposing it to a shower of heated sand. A furnace for doing this class of work is shown in Fig. 14. It consists of an oven furnace in which is arranged a tumbling barrel, or revolving cylinder, the inside surface of which is filled with a series of boxes that carry the sand up and then pour it in a shower over the work. Clean white sand or ground flint is generally used for this purpose, and the work itself slides or rolls forwards on the sand in the bottom of the drum as the latter slowly rotates. The rotating drum *a* is driven by a worm-wheel and worm, shown in the illustration.

The temperature may be gauged by noting the reading of the thermometer *b*. The burners are arranged in a chamber below the revolving drum, the gas being lighted at the hole *c*.

58. Air-Tempering Furnace.—For tempering certain classes of work, there is frequently used a furnace so arranged as to heat air as it passes through pipes or between plates situated in the heating chamber. The heated air is

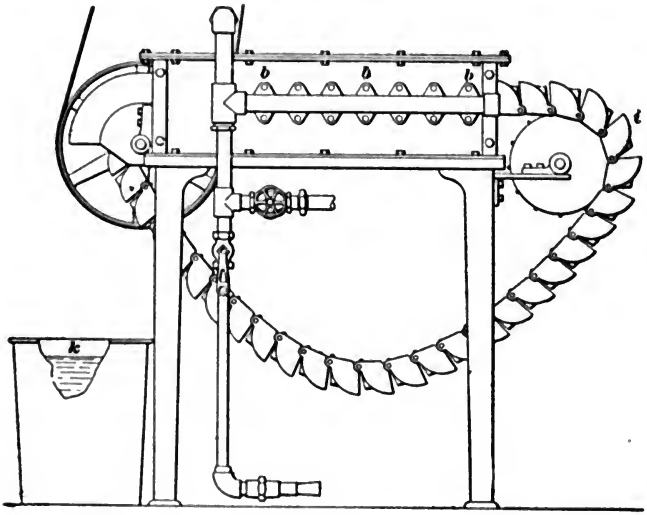

FIG. 15

then conveyed to the oven or chamber in which the work to be tempered is placed.

59. Chain-Conveyer Furnace.—For heating or tempering work of irregular form, many different styles of chain-conveyer furnaces have been brought out. One of these is shown in Fig. 15. The furnace body proper is heated by a series of burners *b*, *b*, and the work to be tempered is placed between the cast links *i*, at the right-hand end of the furnace. The temperature of the furnace and the speed of the chain are so regulated that the work is heated

to just the required degree while it is passing through the furnace. When the work has been heated it is dropped automatically into a cooling bath *k*. Furnaces of this class are used for heating a great variety of work, for either hardening or tempering.

60. Lead-Pot Furnace.—Molten lead is largely used as a bath for heating steel for hardening. The lead may be contained in a small pot over a special furnace, like that illustrated in Fig. 11, or the pot may contain over a ton of molten metal, as in the case of furnaces in which it is desired to maintain the temperature of the bath within very close limits.

61. Oil-Tempering Furnace.—For drawing the temper in oil, special oil baths placed over suitable heating furnaces are very frequently used. One form of gas-fired oil-tempering bath is shown in Fig. 5. For large or long work these baths frequently take the form of deep cylindrical pots, which may be heated over a coke or coal fire or by means of oil. As the style of furnace required depends entirely on the character of the work being done, no general rules for the selection of oil-tempering furnaces can be given, but there are certain precautions that should always be taken. With gas-burning furnaces, the gas and air valves should be so located that the boiling over and ignition of the oil in the tempering tank will not prevent the operator from shutting off the fire under the furnace. In any oil-bath furnace, there should be provided a cover that can be placed over the tank quickly to extinguish any fire that may start. With an oil-bath furnace heated with solid fuel, the bath should be so located that the boiling over of the oil will not carry it into the fire in the heating chamber. By observing these precautions the tempering tank becomes a relatively safe device, even when the oil is to be heated to a very high temperature.

62. Tool Dresser's Forge.—When the steel is heated in a forge using solid fuel, it is well to have a specially constructed forge with a hood. The reasons for this are: first, for all tool dressing a very deep fire is necessary, and

second, the hood will, to a considerable degree, protect the work from drafts. A good form of this style of forge is shown in Fig. 16. A heavy cast-iron base *a* supports the

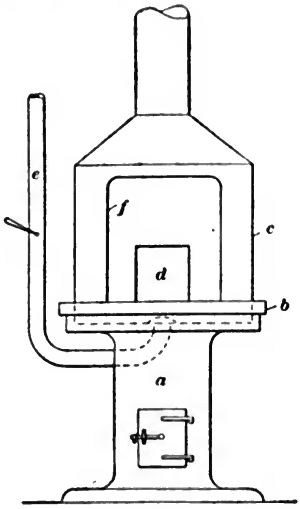

FIG. 16

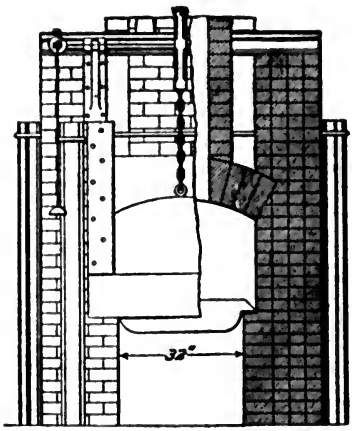

FIG. 17

forge pan *b*, over which is mounted a hood *c*. At the back of the hood there is a rectangular opening *d*, through which long work is allowed to project. Blast for the forge is supplied by the pipe *e*. In the front of the hood there is a large rectangular opening *f*, giving ready access to all parts of the forge pan. The top of the forge *b* should be about 3 feet in diameter, and the hood about 24 inches high up to the conical portion leading to the stack. Crushed coke is generally used as a fuel in such a forge, although for some work charcoal may be used.

63. Hardening Furnace.—In many cases, a hardening furnace using coke as a fuel is desired; such a furnace is shown in detail in Figs. 17 and 18, the left-hand portion of Fig. 17 being a front view, and the right-hand portion a section. Fig. 18 (*a*) is a longitudinal section, and Fig. 18 (*b*) a plan of the grate and a section through the fire-door. The

grate bars are of the herring-bone pattern. In any furnace of this kind, it is very important that the surface of the grate should remain level, and that the bars, as far as possible, should be kept from warping. Warping of grate bars causes an unequal distribution of the air, resulting in an unequal

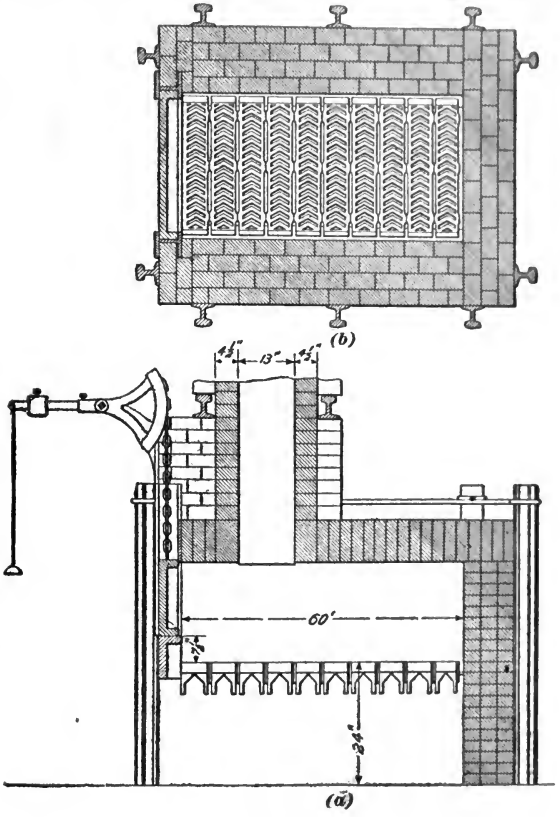

FIG. 18

heating and possible burning of the steel. Clean, hard coke should be used for such a furnace, unless for special work good hard charcoal is preferable. The fire should be kept at such a level that its upper surface will be level with, or slightly above, the bottom of the fire-door.

HARDENING BATHS

64. Water and Brine Baths.—In many shops, a barrel or any other convenient receptacle is used to hold the water for the hardening bath. Where considerable hardening is to be done, especially where brine is used, it is well to have a large tank that can be covered, when not in use, to exclude

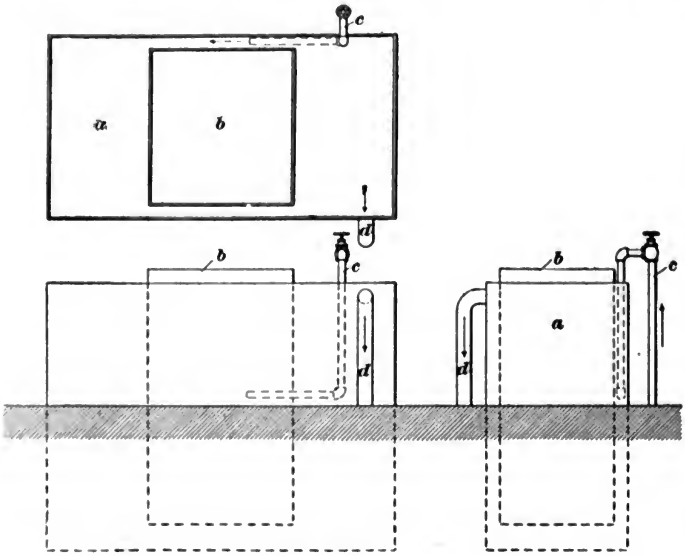

FIG. 19

dust and dirt, and the temperature of which can be controlled either by suitable steam and cold-water pipes passing through the bath, or by surrounding the bath by a tank of water maintained at the desired temperature. In most cases, if the bath is in continuous use, it will be necessary to cool it in order to keep it at the proper temperature, and this can be accomplished by flowing cold water about the bath. Fig. 19 shows

a plan, and side and end elevations, of a hardening bath, in which *a* is a large water tank and *b* the bath proper. The water for cooling the tank *a* flows in through the pipe *c*, and the overflow water passes out through the pipe *d*. It will be noticed that the pipe *c* is brought into the tank in such a way as to insure the circulation of the water about the bath *b*. If for any reason it is desired to maintain the bath at a temperature above that of the inflowing water, it may be necessary under some circumstances to warm the bath, and in this case a steam pipe may be placed in the tank *a*.

65. Oil Baths.—When oil baths are used, they may be arranged as shown in Fig. 19, the oil being in the bath *b*, and the water circulating about it to keep it at the required temperature. Circular tanks having double walls are also frequently used, being so arranged that there is a circulation of water between the walls. In some cases, oil baths are provided with air pipes passing down the sides and along the bottom, for injecting air into the bath through a large number of very small holes. These air pipes are arranged in the central part of the tank and cause the oil in the center to rise, and that next the walls to descend. The air not only serves to circulate the oil and so keep it at a uniform temperature, but also aids very greatly in cooling the oil.

HIGH TEMPERATURE MEASUREMENTS

PYROMETERS

66. For measuring ordinary temperatures, even as high as 1,000° F., special mercurial thermometers are frequently used; but for determining the temperatures necessary for annealing, hardening, and similar operations, some form of **pyrometer** should be employed. One form of pyrometer for measuring high temperatures is shown in Fig. 20; in its

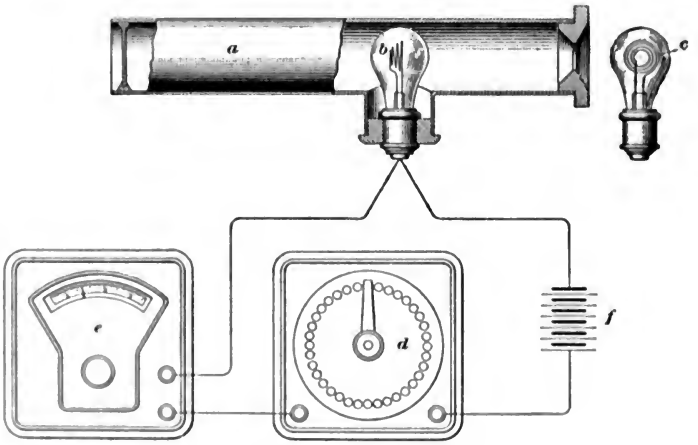

FIG. 20

design, advantage has been taken of the fact that the color of the filament in an incandescent electric lamp depends on the amount of current flowing through it. This pyrometer, or thermal gauge, consists of a metal tube *a*, blackened inside, into which is fitted an incandescent lamp *b* whose filament is a conical helix, as shown in greater detail at *c*. A resistance box *d* is used for varying the amount of current

passing through the lamp, while a very delicate ammeter *e* is used to measure the current, which is furnished by a storage battery *f*. In determining the temperature, the operator looks through the tube *a* at the work in the furnace, varying the resistance of the lamp circuit, while doing so, by means of the rheostat *d* until the color of the lamp filament is of the same shade as that of the work examined. When the filament is hotter than the work, it is brightly outlined against the latter; but when the filament is at a lower temperature than the work, it appears darker than the latter. When the filament and the work are of the same temperature, they are of the same color and the filament then becomes invisible. The amount of current passing through the lamp, as measured by the ammeter *e*, then serves to indicate the temperature of the work; the temperature readings corresponding to the current readings of the ammeter are obtained by means of a chart or table, or the ammeter may be provided with a special scale giving temperature readings directly. This instrument may not only be used for measuring temperatures in the manner indicated, but it may be used for observing the time at which a piece of work arrives at a desired temperature. It is also possible to use it in measuring the temperature of different parts of the same furnace, the tube simply being turned toward that part of the furnace which is to be examined. The resistance in the circuit is then varied until the filament and the work correspond in color, when the ammeter reading will indicate the temperature, as explained above.

TREATMENT OF LOW-CARBON STEEL

PROPERTIES AND MANUFACTURE OF LOW-CARBON STEEL

1. Properties of Low-Carbon Steel.—What is commonly known as **low-carbon,** or **merchant,** steel generally contains from .1 to .5 per cent. of carbon, although it sometimes contains as high as .75 per cent. It is used in the construction of machinery, the structural work in buildings, in ship building, bridge building, railroad work, etc. Phosphorus or sulphur should not exceed .1 per cent. in forgings. Phosphorus makes steel brittle when cold; that is, **cold short.** Sulphur makes steel brittle when hot; that is, **hot short.** Most low-carbon steels contain a very small amount of manganese, but the quantity of this element is so small that it has practically no effect on the properties of the steel. A good quality of low-carbon steel containing only .1 per cent. of carbon can be forged very much like wrought iron. Such steel is soft, ductile, and malleable. It can be welded in small pieces, but it cannot be used to build up large forgings by welding, as is done with wrought iron. Its strength, in tension, is usually less than 60,000 pounds per square inch, but it increases, though the ductility decreases, as the percentage of carbon is increased. The higher the percentage of carbon the harder is the steel, both when hot and when cold, and hence high-carbon steels require heavier blows for producing a given effect in forging.

Low-carbon steels may be subjected to various treatments to impart certain desired qualities to them. They may be

COPYRIGHTED BY INTERNATIONAL TEXTBOOK COMPANY. ALL RIGHTS RESERVED

annealed to make them soft and to relieve internal stresses; they may be oil-treated, or oil-tempered, to make them tough and increase their strength, or they may be case-hardened to give them hard surfaces.

2. Manufacture of Low-Carbon Steel.—Low-carbon steel may be made by the crucible process, the Bessemer process, or the open-hearth process. The process used will, to a large extent, determine the percentage of impurities it contains; and generally the presence or absence of other elements than carbon determines the fitness of any given steel for different classes of work.

In the **Bessemer process** molten iron containing a considerable amount of carbon and silicon is placed in a **converter**; this is a round pear-shaped vessel with an opening in the top at *a*, Fig. 1, and supported on trunnions *b*, *b'*, so that it can be rotated. The converter is partially turned on its side and the charge of molten iron poured into it; compressed air is then admitted through the trunnion *b*, which acts as a valve, as the converter swings to its upright position. This air passes to the bottom *d* of the converter through the pipe *c*, and up through the holes *e* in the lining. It rushes through the molten metal and burns out the carbon and silicon. The air pressure must be sufficient to prevent the steel from flowing through the openings *e* into the bottom of the converter. Theoretically, the carbon can be burned out to any desired point and the operation stopped, thus producing steel containing the desired percentage of carbon; in practice, however, it is found exceedingly difficult to stop the work at this point. Hence, all the carbon is burned out and then the desired amount is added by putting in an iron high in carbon.

In this method, silicon, which is one of the acid elements, is burned out; hence, this process is known as the *acid Bessemer process*. It is the one generally used, especially in the northern and central portions of the United States, because most of the pig iron in this region is free from phosphorus and high in silicon. Phosphorus cannot be burned out in the

acid Bessemer process, hence, the pig iron must be low in phosphorus if steel is to be made from it by this process.

Bessemer steel is also made by what is known as the *basic Bessemer process*. In it silicon cannot be burned out to any great extent, and hence iron low in silicon must be used. It may, however, contain a greater percentage of phosphorus, as some of this is burned out. The converter must be provided with different linings for these two processes.

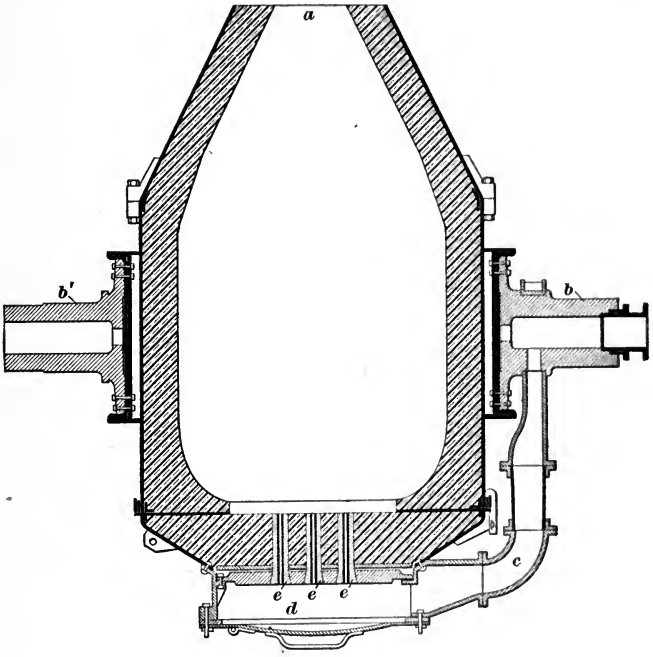

FIG. 1

Bessemer steel can be made with any required percentage of carbon. The greatest value of the Bessemer process, however, is due to the fact that steel can be made by them at less cost than by any other process, and it is therefore used largely for making steel rails, structural shapes, etc.; also, for steel forgings, especially those of moderate size.

3. Open-Hearth Process of Making Steel.—In the Bessemer process, the steel is made from pig iron, but in the **open-hearth process** a large portion of the charge is scrap steel that has already been purified. In the Bessemer process, air is blown through the melted iron to burn out the carbon, but in the open-hearth process the carbon is removed by a flame burning against the surface of the melted iron. The open-hearth process, therefore, requires a large surface of metal with but little depth and takes its name from the style of furnace in which the steel is made. An *open-hearth furnace* is shown in Fig. 2. The iron is heated in the hearth, or basin *a*, and the air and gas enter and the burned gases

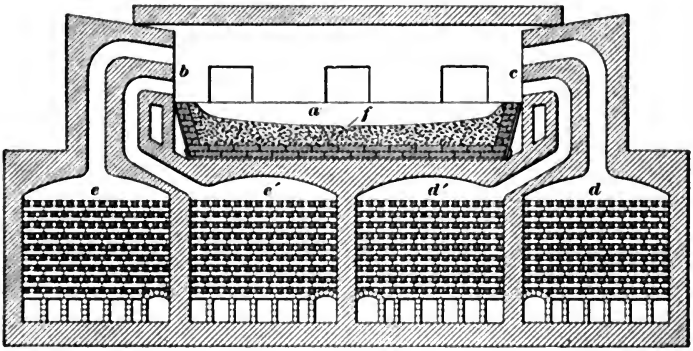

FIG. 2

escape through flues *b* and *c*. The chambers *d*, *d'*, and *e*, *e'* are nearly filled with firebrick or thin tile checkerwork containing wide open spaces. When the process is completed, the metal is drawn from the hearth through a spout at *f*. In some furnaces of recent design, the hearth *a* is arranged so that it can be tilted toward the spout for the purpose of pouring the steel, the ends being stationary, as in the furnace shown in Fig. 2.

The furnace is sometimes started by melting pig iron on the hearth and sometimes by using melted iron just as it comes from the blast furnace. Air is admitted through the checkerwork *e*, and the gas is admitted through the checkerwork *e'*,

the air and gas mix and burn at *b*. The flame is directed downwards so that it strikes the surface of the metal in the hearth, causing it to be heated to a very high temperature. The burned gas passes out at *c*, through the chambers *d*, *d'*, heating them as it passes to the chimney. When the checkerwork in *d*, *d'* is heated sufficiently, valves that control the direction of flow of the air and gas are changed so that the air enters through *d* and the gas through *d'*, and the burned gases pass out at *b*, heating *e* and *e'*. By reversing the direction of flow of the air and gas, in this way, about every 20 minutes, the checkerwork can be heated to a very high temperature. The heat taken up by the checkerwork is then given up to the entering air and gas when the direction is reversed. Because of this heat, the temperature of the flame is greatly increased; such a furnace is called a **regenerative open-hearth furnace.**

During the process, the carbon and impurities on the surface are burned out as the molten mass is **rabbled,** that is, worked by using a long bar. The rabbling brings to the surface the metal in the bottom of the bath and aids in producing a uniform mixture of desired quality.

In the Bessemer process, it is impossible to take samples of the charge during the process and test them; but in the open-hearth process, the charge is in the furnace for a greater length of time, and samples are taken from time to time, a quick analysis made, and the necessary changes made in the treatment to produce the desired quality. In this way, a steel of any desired composition can be made without adding carbon, which is, at best, a somewhat uncertain method. In the open-hearth furnace, as in the Bessemer converter, both acid and basic processes may be used, the process depending on the elements burned out. The lining must, however, be selected to suit the charging material.

Open-hearth steel is generally of more uniform grade and purer than Bessemer steel, but the furnace and regenerative stoves are expensive, the time required in the process is greater, and the expense of the fuel, flux, and other charging materials greatly increases the cost of production, so that

this class of steel is always more expensive than Bessemer steel. Open-hearth steel, however, is of better quality and greater strength and is used where the requirements are very exacting. By exercising great care in the manufacture of steel, a good grade of steel may be made by either the Bessemer or the open-hearth process; but ordinarily the higher grades are made only by the open-hearth process.

4. Irregularities Occurring in Ingots.—The steel as it comes from the open-hearth furnace or the Bessemer converter is poured into a large ladle and then into iron ingot molds. The surface of the metal is, of course, immediately chilled, and solidifies; the center, however, and especially the upper part, remains molten for some time. As the interior gradually cools, the sulphur and other impurities are driven toward the center, or to the part that cools last. The metal also shrinks considerably in cooling, and this usually results in a shrink hole of varying size, filled with gas, in the top of the ingot, as shown at *a*, Fig. 3. Sometimes this shrink hole extends more than half way down the ingot; this is known as **piping.** The piped ingot, if drawn down into a forging, will have a flaw running through its center, the length of the flaw corresponding to the length of the piping in the ingot. As the gas from the interior cannot escape except by passing through the solidified surface of the metal, the hole in the finished forging will have approximately the same volume as the pipe in the original ingot. Where large, high-grade forgings are required, it is necessary to make a large ingot, and then cut off the upper portion, which contains the greater part of the impurities, and any piping that may have taken place. It is possible to produce ingots in which this piping effect is comparatively small, but for important forgings it is never wise to use the upper portion of the ingot.

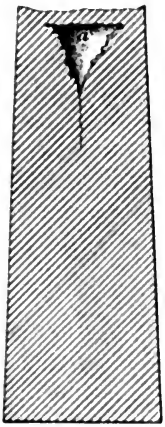

FIG. 3

5. Fluid Compression of Steel.—In the case of very large ingots, the fluid-compression process has been used successfully to prevent piping. In this process, the ingot mold is placed under a large press and great pressure is brought to bear on the top of the ingot. This great pressure prevents, to a large extent, the separation of the sulphur and other injurious elements from the steel, and hence prevents their collecting at the center and also reduces the piping to the least possible amount.

6. Use of Thermit to Prevent Piping.—If powdered aluminum and oxide of iron are mixed in certain proportions and ignited, they will burn, producing a very great heat, the product being practically pure iron or very low carbon steel, and oxide of aluminum as a slag. The mixture of powdered aluminum and oxide of iron, which is called **thermit**, has been used to reduce piping in ingots. The ingot is allowed to cool until the lower part of it is solid, but the upper crust is still in such a condition that it can be broken. The upper crust is then broken with a heavy bar and a can of thermit introduced, as shown at *a*, Fig. 4. The burning of this thermit raises the temperature of the upper part of the ingot and makes the steel sufficiently fluid for the gases to escape easily. A small amount of hot steel is then added to fill the space that would ordinarily be taken up by the piping. The result is that when the ingot is cool it will be found to contain only a few small holes near the top; in other words, the piping effect is reduced to a very small amount.

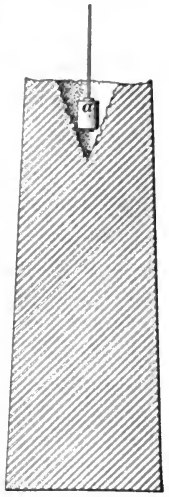

FIG. 4

7. Nickel Steel.—Nickel has been alloyed with steels of almost all percentages of carbon, but its special advantage seems to be in low-carbon steel that contains between 3 and 4 per cent. of nickel. Nickel is a metal that in many of its properties is very similar to iron, and it

seems to form a perfect alloy with iron in practically all proportions.

Nickel steel is a very close-grained, tough material of great strength; like all steel, however, it requires careful treatment to obtain the best results. Its tensile strength and resistance to wear are remarkably high. It is more expensive than ordinary low-carbon steel; its greater cost is, however, not due to the nickel that it contains, but to the very large amount of extra work required to bring it to its best condition. Such parts as crankpins for locomotives, gun barrels to be used with high-power explosives, piston rods and connecting-rods for high-speed engines, especially when of large size, and many other pieces, are made from nickel steel on account of its toughness and its great strength. A good forging cannot, however, be made from a nickel-steel ingot by the ordinary forge and hammer used for low-carbon steel, without subsequent annealing or heat treatment. The heat treatment, which consists of annealing, oil tempering, and reannealing, brings out the good qualities of nickel steel.

It is claimed that 3 per cent. of nickel alloyed with an open-hearth steel containing .25 per cent. carbon produces a metal equal in tensile strength and ductility to a carbon steel of .45 per cent. carbon. The influence of nickel on the elasticity and strength of steel increases with the percentage of carbon present, high-carbon nickel steels showing a greater increase than low-carbon steels.

8. **Effect of Heating on Low-Carbon Steel.**—When steel is cast into ingots, it begins to crystallize the moment the molten mass begins to solidify; and the more slowly it cools the coarser is the crystallization. At a temperature of from 1,200° F. to 1,400° F., the cooling is momentarily arrested, and in some cases the steel actually becomes hotter and shows a visible brightening. At this point, which is known as the point of *recalescence*, the crystallization seems to be interrupted by some rearrangement of the molecules of the steel. If, after cooling to the temperature of the atmosphere, the steel is again heated to a point below the point of

recalescence and allowed to cool, the size of the crystals will not be affected, but if the steel be heated slightly above the point of recalescence, all previous crystallization is destroyed and the steel assumes an amorphous, or uncrystallized, condition. If it be again cooled from a point slightly above the point of recalescence, the crystallization will be much finer and the steel much stronger. The point of recalescence of steel varies with the amount of carbon contained. Ordinary low-carbon steel for forging purposes contains between .25 and .5 per cent. carbon. The higher the percentage of carbon contained, the nearer will the point of recalescence approach 1,200° F.; while the lower the percentage of carbon contained, the nearer will it approach 1,400° F.

ANNEALING, OIL-TEMPERING, AND CASE-HARDENING

ANNEALING LOW-CARBON STEEL

EFFECT OF ANNEALING

9. Annealing has a double object: first, to effect a change in the size of the crystals of the steel; and second, to remove the internal stresses due to forging and irregular cooling. In order to effect a change in the character of the crystals of the steel, it is necessary that the steel be heated above the point of recalescence and then cooled suddenly. In order to remove internal stresses, it is not always necessary to heat to the point of recalescence, as such stresses are frequently due to a partial hardening of the steel, in which case the heating of the piece to from 800° F. to 900° F. will usually cause the desired change in structure. The forging temperature for low-carbon steel is from 1,800° F. to 2,000° F. When the steel at this temperature is taken from the furnace and placed under the hammer or forging press, it immediately begins to cool and crystallize. Working on the piece retards and disturbs this crystallization; and as the work usually

proceeds from one end of the piece to the other, the result is that the finished forging is very irregular in its crystallization and the metal is subject to serious stresses whose exact nature is unknown, but which may amount to several thousand pounds per square inch. It is to remove the stresses from irregular crystallization that forgings should be annealed

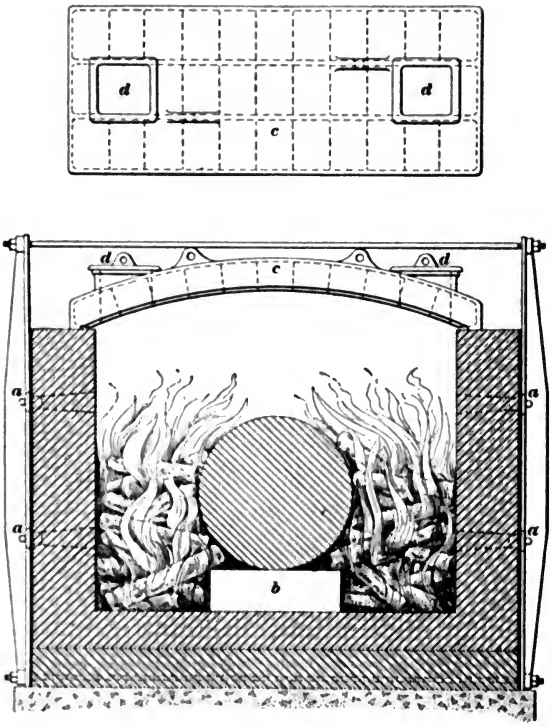

FIG. 5

by heating above the point of recalescence; annealing the forging at any lower temperature will not effect this result. In pieces heated to the point of recalescence and then suddenly cooled, there may be present stresses due to a partial hardening of the steel, and these may be removed by reheating to a lower temperature.

ANNEALING STEEL FORGINGS

10. Annealing Furnaces.—For annealing large pieces, specially constructed furnaces are necessary, as the temperature must be controlled very carefully. A cross-section of a furnace for annealing large shafts is shown in Fig. 5; the

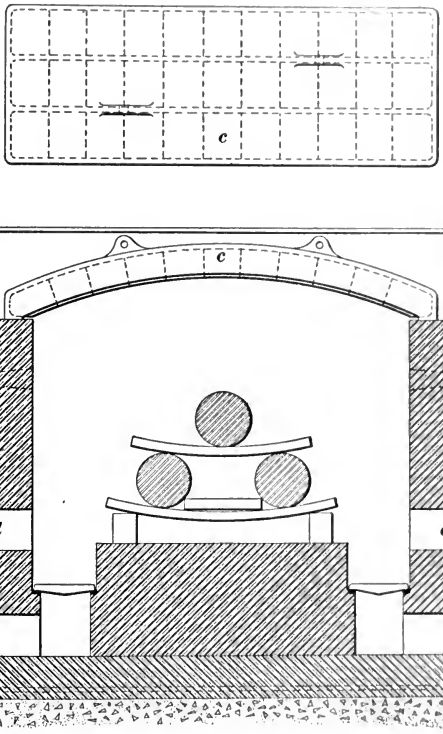

FIG. 6

shaft is supported on suitable piers *b*. Wood is used for heating the work. Peep holes *a* for observing the temperature of the work are provided on one or both sides of the furnace. The top of the furnace is covered with cast-iron bungs, or frames, *c*, lined with firebrick. Openings are left

at *d* through which the fire can be observed, or fresh fuel added. These furnaces are sometimes more that 100 feet long. The work in them is observed very closely and the temperature maintained at exactly the required point. Another furnace constructed for annealing long work is shown in Fig. 6. In this case, three shafts have been placed in the furnace, and are supported on steel bars, as shown. The furnace is so constructed that it can be heated with either coal or wood, or with both. The fire-doors *d* are placed along the side of the furnace, permitting the fire to be made at any point or all along the furnace. Peep holes *a* are provided for observing the temperature of the work, and the roof or top of the furnace is closed with bungs *c*.

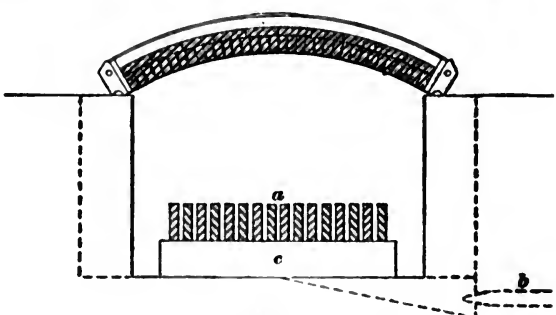

FIG. 7

11. Oil-Heated Annealing Furnace.—A cross-section of a furnace specially constructed for annealing large links, or eyebars, is shown in Fig. 7. This furnace is constructed entirely below the floor level, with the exception of the arched top or cover. The cover is made in sections, so that it can be lifted off, and is lined with firebrick. The eyebars are made of steel and have a large eye on each end. The forging of these ends produces internal stresses in the pieces, and hence the whole link must be carefully annealed. The bars *a* are placed in the annealing furnace as soon as the eyes are completed and while they are still hot. The supports *c* are so arranged that the ends of the bars with the eyes overhang. When the furnace is full of work, the covers

are put on and the oil burners *b*, placed at regular intervals along the entire length of the furnace, are lighted. The eyebars are heated to a medium red heat, when the oil is shut off and the furnace allowed to cool slowly for about 17 hours. The covers are then removed and the work taken out.

OIL TREATMENT OF LOW-CARBON STEEL

EFFECT OF OIL TREATMENT

12. The strength of steel seems to depend very largely on the sizes of the individual crystals thereof; the finer the crystals the stronger is the steel. What is known as **oil-tempering,** or **oil-treating,** is frequently resorted to in order that the crystals may be as fine as possible. This treatment consists in heating the steel to a point slightly above the point of recalescence and then plunging it into a bath of oil. This preserves the amorphous condition of the steel that results from heating it above the point of recalescence. The sudden chilling of the steel, however, results in a certain degree of hardening, and hence it is usually necessary to anneal oil-tempered forgings or to draw the temper by heating them carefully to from 800° F. to 900° F. With high-carbon steel heating to such temperatures will result in a thorough softening of the steel, and will remove all traces of hardness without producing a coarser crystalline structure in the steel. When an extensive line of tools or machinery is to be manufactured from low-carbon steel, great care should be taken to obtain metal of a uniform character, and to determine, by experiment, the best temperatures for treating it. In the case of very large forgings, it is possible to take test pieces from the forging and analyze and test them carefully, but in the case of small work it is impossible to test each piece, and hence the necessity for always using steel of uniform composition. For oil-treating small forgings of a regular shape, special cast-iron chairs, or supporting frames, may be made to support a number of pieces while

heating, and then these frames with the pieces may be lowered into the oil bath and all cooled together. Such a method as this effects great economy in handling.

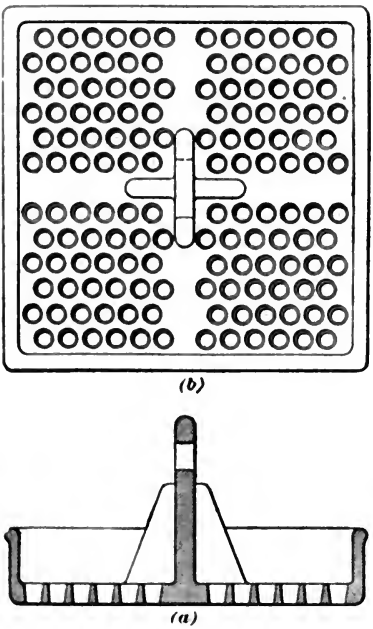

(b)

(a)

FIG. 8

Sometimes forgings of low-carbon steel are submitted to a combined oil tempering and annealing process, which consists in heating the pieces above the point of recalescence, cooling them in a bath of oil, and then heating them uniformly to a dull red, and allowing them to cool slowly in a dry place. This is practically the same as the oil tempering, except that the heat is frequently carried to a dull red, or about 900° F. or 1,000° F.

13. Oil Treatment of Small Work.—Small pieces may be treated by placing a number in a cast-iron tray like that shown in Fig. 8 and heating them to the proper temperature. They are then taken out and lowered into a tank of oil until

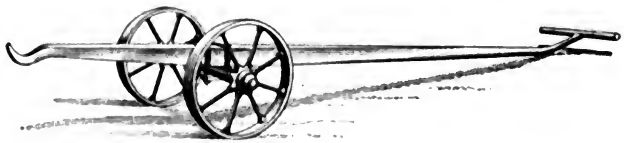

FIG. 9

nearly cold, but lifted out while still hot enough to drain and dry quickly. The tray shown in Fig. 8 is 26 inches square; (*a*) is a section, and (*b*) a plan view. The bottom

of the tray is 1½ inches thick, and has 144 holes, 1½ inches in diameter, through it. There is a heavy lug in the center, with a hole to receive the crane hook or other lifting device.

For lifting and moving the cast-iron trays from the furnace, a special lifting hook of the form shown in Fig. 9 may be used. The cast-iron box or tray containing the work is brought from the furnace with the lifting hook and set on the floor near the oil tank. A crane is then used to place the tray in the bath of oil.

TEMPERATURES FOR TREATING STEEL

14. For oil-treating, the steel is ordinarily heated between 1,375° F. and 1,450° F.; the exact temperature depending on the percentage of carbon contained. For annealing work, it is heated to from 1,200° F. to 1,270° F. For forging open-hearth or other low-carbon steel, it should be heated to from 1,800° F. to 2,000° F. The lower the percentage of carbon the lower is the temperature required, although it is also true that low-carbon steels will stand higher temperatures than will high-carbon steel without being injured.

CASE-HARDENING

PRINCIPLES AND APPLICATION

15. Theory of Case-Hardening.—Owing to the fact that the percentage of carbon in low-carbon steel is small, it cannot be hardened sufficiently to resist any considerable wear unless it is subjected to a treatment known as **case-hardening.** The process adds carbon to the outer surface of soft, or low-carbon, steel or wrought iron, thereby converting it into high-carbon steel, which may be hardened. When heated to a red heat while in contact with wood or bone charcoal, ground bone, charred leather, or other material rich in carbon, the metal absorbs carbon from the material in which it is packed and heated. The depth to which the carbon penetrates depends on the kind of packing used, the temperature at which the metal is kept, and the

length of time it is heated. The higher the temperature, the more rapid is the absorption of carbon; while the longer the heat is maintained, the greater is the depth to which the carbon penetrates. The absorption of carbon produces an outer layer or surface coating of high-carbon steel that becomes hard when the piece is cooled suddenly, thereby imparting to the metal the desired wear-resisting quality while retaining the toughness of the soft core of unchanged iron or low-carbon steel. Carbon may be added by means of the bone-charcoal process or by the cyanide method, the former being used when the case-hardening is to be comparatively deep, while the latter is ordinarily employed when but a thin film of hardened steel is required, or when localized case-hardening is necessary. If red-hot steel be coated with potassium cyanide, or placed in contact with molten cyanide, the cyanide is decomposed, the carbon contained therein entering the steel and thus case-hardening it.

16. Packing Materials for Case-Hardening.—The most common packing materials for case-hardening are ground bone, either raw or charred, charcoal, charred leather, or charred hoofs and horns. Each material is especially advantageous for some purpose. It is advisable, however, to use packing materials containing but a small percentage of elements that might be injurious to the steel, as, for instance, sulphur and phosphorus. Raw bone will not make a piece of work as tough as charred bone.

For hardening small, delicate work, the following mixture has been recommended: Equal parts of bone charcoal and granulated hardwood charcoal are thoroughly mixed together, and with each twenty parts of this mixture is thoroughly mixed one part of charred leather.

High, quick heats will not leave a piece of case-hardened work as strong as it would be if a lower heat had been used while it was being carbonized, provided that in all cases the heat is sufficiently high for carbonization. Extremely high heats should be avoided, especially when the work is taken from the case-hardening boxes and quenched immediately.

17. Cyanide Hardening to Resist Wear.—Small pieces of steel made from low-carbon steel, such as gun and typewriter parts, are frequently given a hard surface to resist wear by dipping them into a pot of molten potassium cyanide and cooling them in water. Such a pot may be heated in an ordinary forge, but it is better to use a regular *cyanide-hardening furnace;* such a furnace, made for use with gas, is shown in Fig. 10. The cyanide pot *a* is located in the furnace *b*, which is heated by gas burners *c* on each side of the furnace. The holes closed by the blocks *d*, *d* are for lighting the gas or for observing the temperature of the pot. The hood *f* is placed over the furnace so that the fumes will be carried up the chimney.

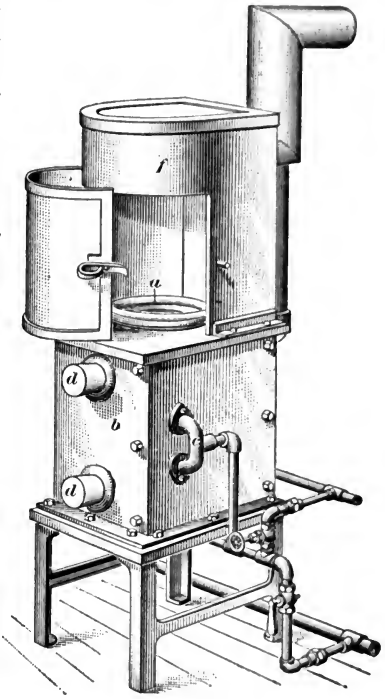

FIG. 10

The pieces to be hardened are dipped into the cyanide bath and left until they have attained the temperature of the bath and also have had opportunity to absorb the desired amount of carbon. They are then removed and dipped into a suitable hardening bath; cold water is generally employed for this purpose. If too hard, the temper can be drawn just as in the case of ordinary carbon steel.

As potassium cyanide is extremely poisonous, great care must be taken in handling it; the absorption of a very small quantity through cuts in the hands may have a fatal effect; in fact, lump cyanide should be handled with the bare hands

just as little as possible. After melting the cyanide, care should be taken not to inhale the fumes, as they are extremely poisonous, and not to allow any of the hot material from the bath to be thrown or splashed on the operator, as it will cause serious and painful burns.

Gun parts that require a mottled blue surface that will be hard enough to resist wear fairly well are sometimes case-hardened by placing them on a hook on the end of a steel rod and dipping them into molten potassium cyanide for about 2 minutes, or until they are cherry red. They are then quenched in water, giving them a jerky, up-and-down motion, the first dip carrying them barely under the surface, and each succeeding one deeper. This results in an irregular cooling, accompanied by slight oxidation of the surface, which gives the desired mottled effect. The cooling, however, should be sufficiently quick and uniform to prevent setting up serious internal stresses in the metal.

18. Hardening Tools With Potassium Cyanide. As a rule, dies, cutting tools, engravers' plates, etc. hardened in potassium cyanide must be heated somewhat longer than pieces that are simply hardened to obtain a surface that will resist wear. The temperature of the hardening bath is usually from 1,650° F. to 1,830° F. Ordinarily, from 3 to 5 minutes is a sufficient length of time to leave a piece in the cyanide. Some classes of work are hardened by cooling in lard oil. One method especially useful in hardening steel that requires a fairly hard surface, but may require some straightening, as, for instance, plates for steel engravings, is to heat in the cyanide and then cool in lard oil to a temperature of about 525° F., and then allow the piece to cool in water. This treatment will case-harden the steel quite thoroughly, yet will leave it in such a condition that it can be straightened.

Potassium cyanide causes the steel to scale when it is plunged into the bath, leaving a clean surface, so that the steel hardens very quickly. Because of its scaling effect, potassium cyanide is not considered as good as prussiate of potash

for case-hardening work having sharp corners. The prussiate of potash forms a scale that does not allow the water to act as quickly as it otherwise would, thus protecting the steel when it is first plunged into the bath; the prussiate of potash forms slight deposits in corners at the roots of teeth, and thus protects them from the first influence of the cooling bath. Advantage of this effect is taken frequently in making slender milling cutters from low-carbon steel. This method is frequently employed also in hardening pieces of high-carbon steel, since the prussiate of potash protects the corners of delicate tools.

19. Localized Case-Hardening.—Frequently, it is desirable to harden some parts of an object and leave the balance soft, as, for instance, to harden the centers at the ends of an arbor or a cutter bar; this may be accomplished by heating the piece to a dull red, applying potassium cyanide to the centers, returning the work to the fire, heating to a red heat, and then cooling in water. When the centers are to be hardened, it is best to take the piece with the tongs and plunge it into the bath with the center up, but with a jet of water from a tap or from a hose to play on the upper end of the arbor, so that the water will enter the center and harden it throughout. When the center is plunged down, the end of the arbor may be hardened somewhat, but a steam pocket generally forms in the center itself and prevents its hardening properly.

Sometimes carbon-steel tools are heated in a cyanide bath before hardening. It is probable that the cyanide adds very little carbon to this class of steel, but it effectually prevents the decarbonizing of the surface, and in the case of tools that have been forged or subjected to heat treatment without subsequent removal of the surface metal, the cyanide undoubtedly serves to recarbonize the surface steel that has lost some of its carbon in the previous operations. This is especially true in the case of such tools as scrapers.

CASE-HARDENING WORK WITHOUT COLORS

20. Hardening Small Work.—When it is desired to produce a hard surface on the work, rather than a mottled appearance or certain special colors, the following procedure is all that is necessary: The work should be packed in granulated raw bone in suitable boxes, first placing in the bottom of the box a layer of bone at least two-thirds as thick as the work. For instance, for screws $\frac{3}{4}$ inch in diameter and smaller, a $\frac{1}{2}$-inch layer of granulated bone should be put in the bottom of the box, and on this alternate layers of the work and bone, care being taken that no two pieces touch each other and that none comes within $\frac{1}{2}$ inch of the sides of the box. When the box is filled to within $1\frac{1}{2}$ inches of the top, it should be given a thin layer of raw bone, and the balance of the space filled with bone that has been used; the cover should then be put on and luted with clay. After the luting has had time to dry, the box should be put into a furnace and heated for from 3 to 4 hours, for work of the size mentioned, provided that it is packed in moderately small boxes, as, for instance, boxes measuring 4 in. $\times$ 4 in. $\times$ 8 in. on the inside.

In heating any work for case-hardening, it is necessary to use a box proportioned to the size of the work, for if very small work is packed in a large box, it will take several hours for the heat to penetrate to the center of the box; and as a consequence the work around the outside of the box may be case-hardened very deeply, while that in the center has had practically no opportunity to absorb carbon, and hence will be soft. If it is necessary to pack small work in a large box, it should be placed around the outside of the box and a layer of bone put between the work and the walls of the box, and then several rows of the work surrounded by raw bone, the center of the box being filled with spent or old bone.

After the box has been heated a sufficient length of time, the entire contents may be thrown into clear, cold, soft water. Delicate pieces should be dropped into oil. The tank into which the work is thrown should be of sufficient

depth to insure the thorough cooling of the work before it reaches the bottom.

21. Case-Hardening Large or Heavy Work.—To case-harden pieces of steel 3 inches or more in diameter or thickness, the work should be surrounded by at least $1\frac{1}{2}$ to 3 inches of raw bone and heated to a bright orange for 18 hours; it should then be plunged into cold, running water or into salt water. Large work of this kind is usually removed from the packing box and plunged separately, while in the case of small work the entire contents of the box are dumped into the hardening bath. When an extra depth of case-hardening is required, the pieces may be heated, as already mentioned, and allowed to cool in the box; they should then be removed, repacked in fresh bone, and heated again as before, and then plunged into cold water.

When a fine-grained, hard surface is required, the work is sometimes carbonized and allowed to cool in the packing box. It is then reheated carefully to the lowest temperature at which it will harden properly when plunged into the cooling bath. This has the effect of refining the steel, as in the case of high-carbon steel. The temperature at which the steel absorbs carbon in the case-hardening box is usually well above the temperature at which the carbonized steel should be hardened. If the steel is hardened at the temperature at which it is carbonized, the surface will have a rather coarse crystalline structure; hence, it must be reheated to obtain a fine-grained, hard surface.

Special care is required in packing and case-hardening large, flat pieces to prevent their warping. Disks 2 feet in diameter and 4 inches thick should be packed in round boxes that hold one disk each. The work should be placed, flat side down, on a carefully leveled bed of 4 or 5 inches of the best granulated bone, and should have at least 4 inches of the bone packed on top and around it. Some steel workers prefer to place a thin layer of charred leather next to the work to prevent scaling, but this is not necessary. After packing, the cover should be luted on, and the box

heated to a cherry red for from 8 to 10 hours from the time the box is thoroughly heated through. After the box has been removed from the furnace, the pieces should be taken out and placed edgewise in the hardening bath; this bath should be large enough to chill the work quickly and should be provided with a supply of flowing water. In hardening large, flat pieces, there are four points to be observed: first, plenty of bone should be used; second, the pieces should be heated to a bright cherry red; third, the pieces should be dipped edgewise into the cooling bath; and fourth, plenty of water should be used and the water should be kept agitated.

22. Production of Soft Spots in Case-Hardening Work. — Frequently, case-hardened pieces of work have openings or projections that must be left soft for riveting, drilling, or for other operations. When this is the case, the work may be packed in the ordinary manner, heated for the proper length of time, and allowed to remain in the boxes until cool, as would be done in annealing. When the work is removed from the boxes, its surface will be soft, though somewhat carbonized, the depth of carbonization depending on the time the steel remained in the furnace. The parts to be left soft must then have the outer surface removed by machining or filing, thus removing the portion of the steel containing carbon, and exposing the low-carbon steel which will not harden under subsequent treatment. The work should then be heated to the proper hardening temperature, and plunged into water, as in hardening tool steel. On removing the work from the bath, it will be found that the outer surfaces containing the carbon have been hardened, while portions from which the carbonized outer surfaces were removed are soft and can be riveted or operated on in any manner desired. The same results may be obtained by covering the parts to be left soft with a coating of asbestos or fireclay before the steel is subjected to the carbonization process.

The case-hardening effect may also be localized by first either copper- or nickel-plating the work, and then removing

the copper or nickel from the portions to be hardened and leaving the plating on the portions that are to be soft, the plating serving to prevent the carbon from entering the steel where it is to be soft. The pieces are then packed in boxes and heated in the ordinary manner, and when plunged it will be found that the exposed parts are hard, while all parts protected by the plating are soft and can be machined as easily as before subjection to the case-hardening process.

23. Production of Hard Spots in Work.—If, when work is packed in any material for case-hardening, it is desired to make some spot extremely hard, a small piece of potassium cyanide or prussiate of potash may be put on that spot when packing the piece in the bone. It is well to have a small iron spoon for handling the cyanide for this purpose.

24. Use of Old Bone.—After emptying the case-hardening pots into the cooling bath, the bone may be separated from the work and thoroughly dried. As long as it is black after use, it still contains carbon, and hence can be used again, though it is best to mix the old bone with some new. About one part of new bone to two parts of old is a common mixture; as the new granulated bone is white, and the old, partly burned bone is black, the mixture of the two will result in a gray color. For small work, a dull gray, that is, two or three parts of old bone to one of raw bone, may be used. For larger work, a light gray should be used, sometimes containing equal parts of old and new bone, and sometimes less than half old bone. A little experience will indicate the proper proportion of old and new bone to use for this work. Constant burning will finally reduce the bone to a white ash that is valueless for case-hardening. As a rule, the bone is used until it begins to look gray, then it is discarded for case-hardening, but is used for packing work for annealing; the very small amount of carbon it contains will prevent steel from being decarbonized during the annealing process. Sometimes bone that has been entirely spent, that is, burned white, is used for packing work for annealing.

25. Telltales, or Indicators.—To judge the condition inside of the case-hardening or annealing box, **telltales**, or **indicators**, are often used. These are pieces of wire introduced through holes drilled in the top of the box and allowed to extend through the bone, between the work, clear to the bottom of the box. These pieces of wire should project from the top an inch or so, and when the box has been in the furnace some time one piece is withdrawn, and if it shows a uniform red throughout, the work is timed from this point. If the middle of the wire is still black or dull red, another is drawn later, and this operation is repeated until the interior of the box is found to be of the desired color. After having tested the different-sized boxes in this way a few times, the operator will be able to judge the time correctly. Sometimes the telltale is used also to judge the depth of case-hardening; in such a case it should be a rod about $\frac{1}{4}$ inch in diameter and made of the same kind of steel that is to be case-hardened. The rod should be withdrawn quickly, quenched in water, and then broken to observe the depth to which the work has been hardened.

CASE-HARDENING FOR COLOR

26. Packing Work to Obtain Colors.—By case-hardening, a beautiful mottled appearance may be obtained on the work. To obtain this mottled effect, the work must be packed in material absolutely free from grease or oil. The work itself must also be free from grease or oil. To char the bone for removing the grease, it may be put into boxes say 9 in. $\times$ 9 in. $\times$ 36 in., covered, and placed in the furnace at night after the work is withdrawn. The heat remaining in the furnace will be sufficient to char the bone during the night. If there is much fire left, it will be necessary to draw part of it, as the object is simply to char the bone, but not to burn it, thereby eliminating all grease. If small boxes are used, they must be watched so that they may be removed from the furnace just when the bone is all charred.

After a supply of charred bone or charred leather has been provided, the work should be packed in boxes, using this material just as the raw bone is used for packing ordinary work. The work should then be brought to a red heat and held there for from 2 to 4 hours. To get a good color, the heat must be held uniform; if the work is heated too hot there will be no color. A cherry-red heat gives good results, although with small work a somewhat lower temperature may give the desired results. In packing work to obtain colors, various mixtures of packing material are frequently used, as, for instance, charred bone and wood charcoal. Sometimes charred leather is mixed with one or both of the above ingredients. When case-hardening for color, no attempt is made usually to harden the work to any great depth, the requirements being a hard but thin surface and a good color.

27. Cooling Work to Obtain Colors.—While good colors are sometimes obtained by quenching in rather hard water, it is nevertheless best to use soft water. Some provision should be made for circulating the water in the bath; this is usually accomplished by arranging the inlet pipe so that the water will be discharged upwards from the bottom of the tank in a series of jets. The inlet pipe may also be arranged so that the water will enter the bath at the bottom, where it is mixed with compressed air, which escapes upwards in a series of bubbles. A sieve or grating should be hung at such a distance from the top of the bath that the work will be thoroughly chilled before it comes to rest on it, and the meshes of the sieve should be large enough to allow the burnt bone to pass to the bottom of the tank. It is absolutely necessary to have running water in the tank if large amounts of work are to be thrown into it. After the work has been thoroughly heated, the box is brought from the furnace to the bath, the cover removed, the box held close to the surface of the water, and the work poured in. This operation must be performed quickly and carefully to prevent the air from acting on the steel before it reaches the

water. At the same time, with large boxes of work, care must be taken not to dump in the material as a solid mass, for, under such circumstances, much of the work would reach the sieve without being chilled, and hence would not be hardened to the desired degree.

28. Cleaning Work.—The work is removed from the hardening bath by lifting out the sieve, or grating, on which it falls. It should then be dipped into clean boiling water, after which it can be dried in sawdust. It should then be given a light coat of oil to bring out the colors and to prevent it from tarnishing.

29. Producing Temper Colors on Case-Hardened Work.—In producing temper colors on case-hardened work, the pieces are first case-hardened and then rolled in a tumbling barrel with leather scraps or other polishing material until the surface is polished to the desired degree; the pieces may then be heated in a sand bath or in a tumbling-barrel furnace for drawing the temper until the desired color appears. The work is then plunged into cold water, dried in sawdust, and oiled slightly to avoid tarnishing. By doing the work in a gas-fired tumbling-barrel furnace or in a gas-fired air tempering furnace and noting the exact time required, the desired color can be obtained with great exactness, it being an easy matter to produce any color from a light straw to a deep blue. The blue pieces will be somewhat softer than the straw-colored ones. Sometimes the pieces are placed in a revolving wire cylinder over a slow fire; this permits the color of the work to be observed at any time. The fire used for heating the work must, of course, be free from sulphur or anything that will give off gases that will stain the work.

CASE-HARDENING EQUIPMENT

30. Case-Hardening Boxes.—The boxes, or pots, used in case-hardening work are generally of cast iron, and are of various forms and sizes. Fig. 11 shows several boxes of very good design, especially for small work. They are

made with legs *a* a little over an inch high so that the flame will circulate under as well as over the box, and heat it uniformly. The boxes have a rib *b* around the lower edge to engage a fork *c* that is used to handle them. Large boxes are seldom made with a rib, but are handled with tongs or with some form of fork that passes under the bottom of the box. For ordinary work, the boxes vary from about 4 inches square by 4 inches deep, up to

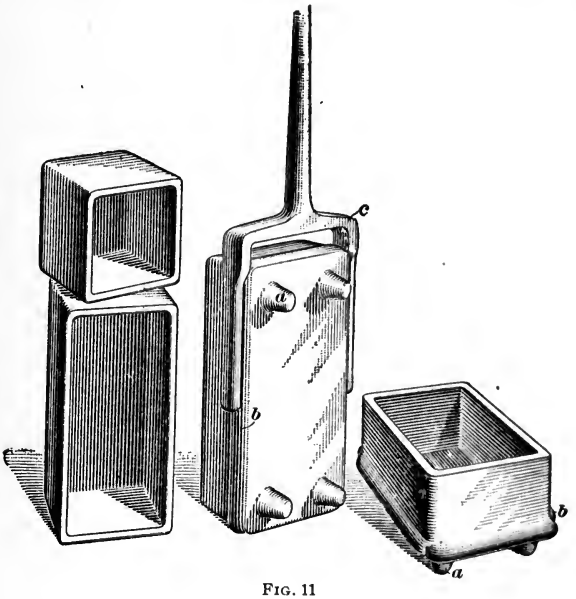

FIG. 11

12 in. × 14 in. × 16 in., though for special work they are frequently made 12 or 14 inches wide and deep by $4\frac{1}{2}$ feet long. Wrought-iron or steel boxes made of $\frac{1}{2}$-inch steel plate flanged at the corners and riveted together are sometimes used.

31. Cooling Baths for Case-Hardening Work.—If a large amount of case-hardening work is to be done, some special form of cooling bath, for use either with oil or water,

is necessary. The most important requisite is that provision should be made for maintaining the bath at the desired temperature. Two styles of cooling baths for use with different classes of work are shown in Fig. 12. That on the right consists of a cylindrical tank of water about 30 inches in diameter, surrounded by a water-jacket in which an active circulation is maintained to keep the bath at the desired temperature. The work is brought from the furnace in the packing box *a*, placed at the side of the tank, and inverted in such a way as to pour the work in a continuous stream into the water. The work collects in a sieve *b* suspended in the tank, while the bone passes through to the bottom of the tank, from which it is removed periodically. A hood is arranged over the tank to protect the workman from the steam and fumes that rise as the work is poured into the tank. This method of cooling will produce a very pretty mottled appearance on the work.

Large work that requires surface hardening without the mottled appearance and at the same time must be extremely tough, is frequently hardened in a tank like that shown at *c*, Fig. 12. This is an oil tank 30 inches in diameter, surrounded by a water-jacket through which the water is constantly circulating to maintain the desired temperature of the bath. The case-hardening pot is brought from the furnace and placed by the side of the bath; the work is removed one piece at a time, dropped into the bath, and collects on the pan *d*. When all the work has been hardened, the pan is raised from the bath with a suitable hoist, and the work allowed to drain. This method of cooling produces a fairly hard surface and a dark blue color, the work being hardened so that it is remarkably tough. After the pieces have drained for some time, they are removed and cleaned with sawdust. The finish left by this method of hardening is one that resists rust very well.

32. Furnace for Case-Hardening With Potash. The potash method of case-hardening is sometimes used, and gives excellent results, but it is applicable only when the amount of work required enables the process to go on

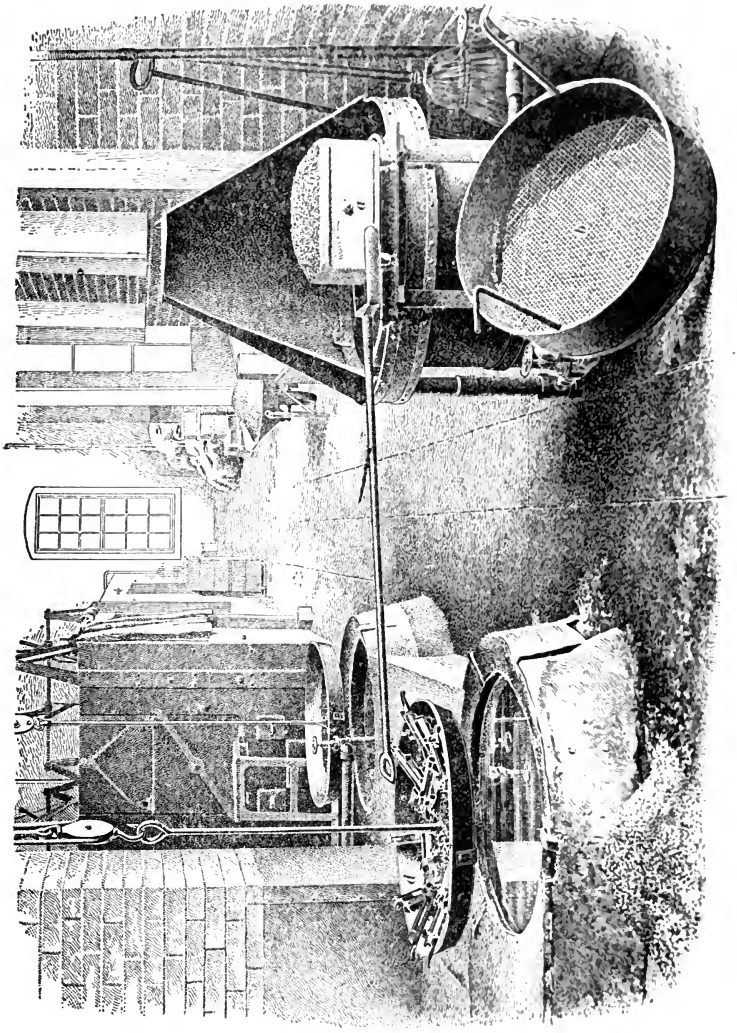

FIG. 12

continuously, or at least daily. In this process, large fireclay tile muffles are used, the tile being laid with fireclay mortar. Coke is the best fuel for such a furnace because it does not give off any soot or clog up the furnace passages. A fireplace is so arranged that the products of combustion will circulate about the muffle and keep it at a uniform temperature. It requires about 2 weeks' firing to get the muffles hot all through and ready for the case-hardening operation. A furnace containing two muffles is shown in Fig. 13; it is incased in heavy, cast-iron plates; the fire-door is at *a*, the ash-pit door at *b*, and the entrances to the muffles are at *c* and *d*; the doors are counterbalanced by the weights *e*, and their movement is controlled by handles *f*. Peep-holes *g*, *g* are arranged at the front of the furnace, while doors *h*, *h* in the side are used both for observing the temperature of the muffles and for cleaning the passages.

The muffles are charged with 25 pounds carbonate of potash and 30 pounds bone black, thoroughly mixed together, and then mixed thoroughly with from 160 to 200 pounds of charcoal. If the quality of the potash is good, the larger proportion of charcoal may be used. The charcoal should be in pieces the size of walnuts, and the potash like granulated salt, and not lumpy. This mixture will last about 2 weeks, when it should be taken out of the muffle and a new charge put in. None of the old mixture should be returned to the furnace, as it loses strength when exposed to the air. The articles to be case-hardened are buried in the hot mixture, and should be entirely covered in the muffle. The muffle door should be kept closed except when changing or inspecting the work. The time that the work is left in the muffle depends on its size and the depth of case-hardening desired. Small work requires 3 or 4 hours for hardening to a moderate depth, while large work or heavy articles require 24 hours. Locomotive links should be left in the muffle from 12 to 14 hours, and guide bars from 18 to 24 hours.

A blackboard should be placed near the furnace with suitable headings painted in white; opposite these the order numbers, names of the pieces, and time they were put in

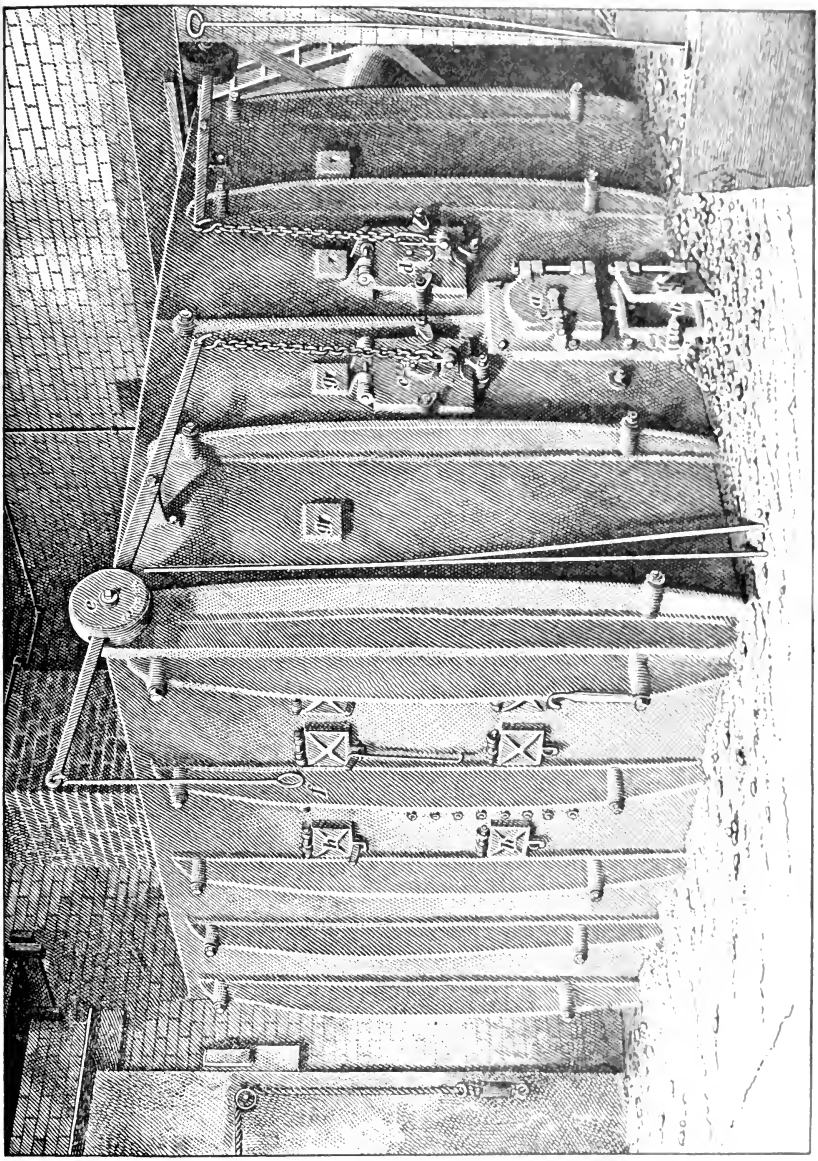

FIG. 13

and the time they are to be taken out should be recorded with chalk. The pieces are removed from the muffle one at a time and quickly plunged into clear, cold water. The cooling bath should be deep enough to permit the longest piece to be plunged endwise. It is a good plan to place a sample piece of iron or steel in the muffle with the work. This may be removed, quenched, and broken, so as to note the depth to which the case-hardening has penetrated.

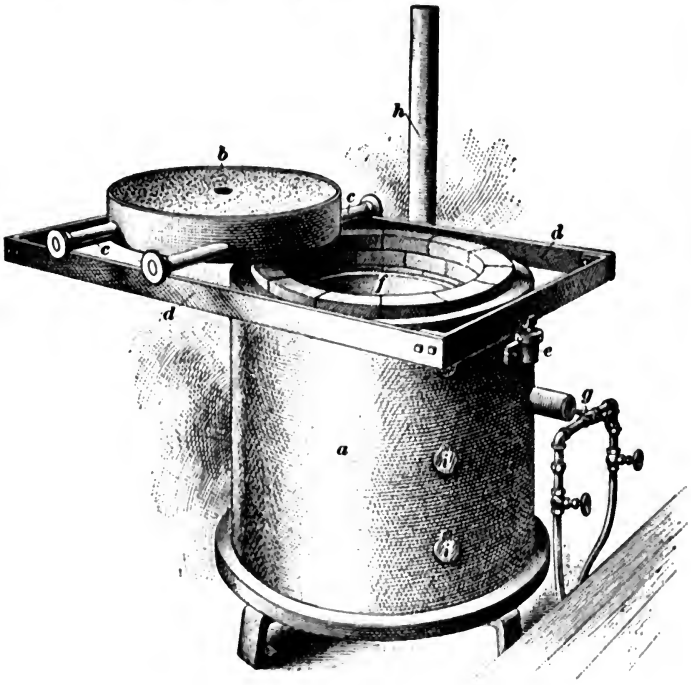

FIG. 14

33. Case-Hardening Furnace for Round Work.—In shops where large engines are built, the wristpins and crankpins are frequently case-hardened, so as to reduce wear as much as possible; there are also many other large pins or short shafts that may be case-hardened to advantage. Work of this character can be hardened best in a vertical position;

this necessitates the construction of a special case-hardening furnace, together with special pots and lifting devices. A furnace for this class of work is shown in perspective in Fig. 14 and in cross-section in Fig. 15. It has a cast-iron shell *a*, $1\frac{3}{8}$ inches thick, 42 inches outside diameter, and 41 inches high, a firebrick lining $4\frac{1}{2}$ inches thick, and a clay bottom covered with firebrick. The cover *b* is a ring casting 6 inches high, having pins or projections cast on the inside to hold the fireclay filling in place; it is supported by four arms *c*, *c*,

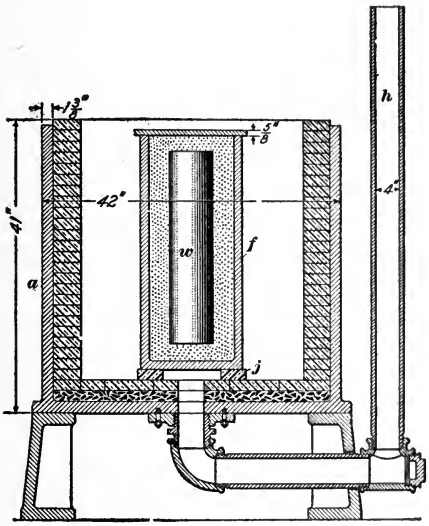

FIG. 15

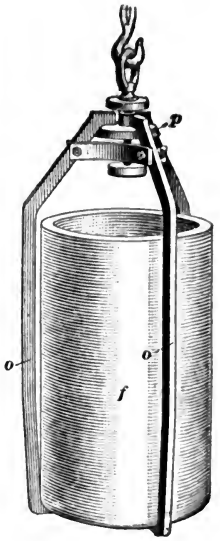

FIG. 16

at the outer end of each of which is a roller that runs on the steel tracks *d*, *d*. The frame supporting the tracks *d*, *d* can be adjusted, by a screw at *e*, so that the cover just clears the furnace. The pot *f* is lowered into the furnace by a special three-pronged lifting device shown in Fig. 16. The three hooks at the end of the prongs *o*, *o* are forced under the bottom of the pot by the conical piece *p* attached to the lifting device at the top, as shown. The pots are 16 inches inside diameter and are 30 inches high. They are covered with a

round plate luted on with fireclay. Only one piece of work *w*, Fig. 15, is placed in the pot at a time. The work is surrounded by several inches of granulated bone or some carbonaceous mixture. The furnace is heated by a crude-oil burner *g*, Fig. 14, the flame from which circulates around the pot. The pot stands on three firebricks *j*, Fig. 15; beneath it an opening connects with a pipe *h*, passing under the furnace and up one side; this pipe should extend 3 or 4 feet above the top of the furnace, and serves to carry off the smoke and gases. When an extra depth of case-hardening is desired, the work is left in the pot in the furnace 24 hours, then allowed to cool, removed, and repacked in fresh material. It is then returned to the furnace for another 24 hours' heating. The first heating of large pins is sometimes continued for 40 hours. To enable the workman to observe the temperature of the pot, peep holes are provided in the side of the furnace, as shown at *i*, *i*.

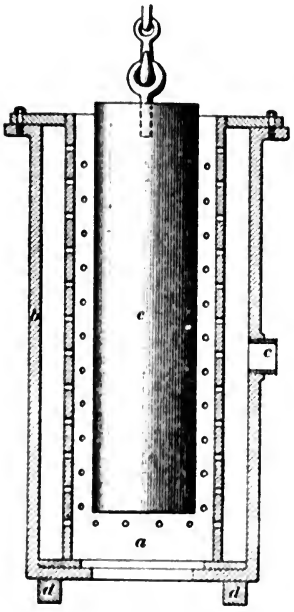

FIG. 17

34. Special Device for Quenching Work.—For cooling crankpins and wristpins, the arrangement shown in Fig. 17 is used. It consists of an outer casing *b*, within which is a 10-inch pipe *a* perforated with $\frac{3}{16}$-inch holes placed $2\frac{1}{2}$ inches apart. The outer pipe *b* is provided with a nozzle *c* through which water is supplied by a hose attached to a hydrant. The whole device is supported on bars *d*, *d* placed across the top of a water tank. The work *e* is lifted from the case-hardening pot by an eyebolt, as shown. It is then lowered into the cooling case and the water turned on so as to strike every point of the

surface in a series of jets, the waste water flowing away through an opening in the bottom.

35. Gas-Fired Case-Hardening Furnace.—When a moderately small amount of case-hardening is to be done, a furnace of the form shown in Fig. 18 will be found very

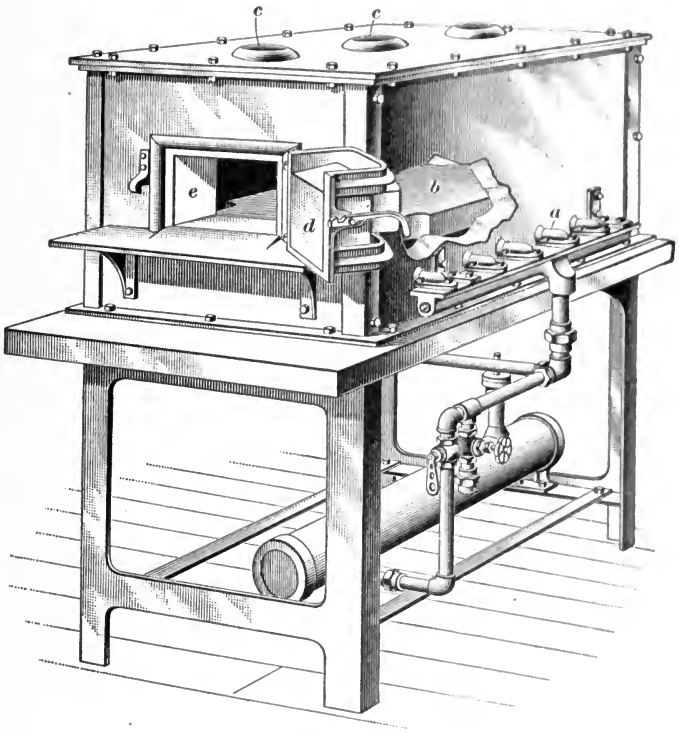

FIG. 18

useful. This furnace has a series of gas burners *a*, arranged along each side, below the bottom plate *b* of the furnace. The products of combustion rise around the outer edges of this plate, on which the case-hardening box containing the work is placed, and escape through the openings *c*, *c*. The opening *e* is closed with a fire-clay plug *d*, supported in the door.

BLUING STEEL

BLUING WITH A MOLTEN BATH

36. It is frequently desirable to produce on iron or steel a blued surface that is not only ornamental, but that resists rust. One method of doing this work is as follows: A cast-iron pot of sufficient size is set in the top of a brick furnace and heated with a hard coal or coke fire beneath it, or with a gas or oil flame. The pot is nearly filled with a mixture of ten parts of niter and one part of black oxide of manganese, which is maintained at a temperature just below a black heat, the temperature being gauged by occasionally throwing a little fine sawdust on the surface of the molten mixture. When the temperature is right, the sawdust will take fire in a few seconds, but will not flash into fire instantly. The manganese does not melt, and the mixture must be stirred with an iron rod just before dipping the work for bluing.

The pieces of work are placed in a wire basket and lowered into the hot mixture; the basket is moved up and down in the mixture a little to observe the color, which should be right for small work in from 1 to 2 minutes. As soon as the desired color is obtained, the basket with its contents is lowered into a tank containing a hot solution of soda, in which it is moved up and down several times. It is then transferred to a tank of clear boiling water, again moved up and down to wash it thoroughly, and lifted from the water, when the heat in the work will dry it quickly.

BLUING POLISHED STEEL

37. Steel articles may be blued by heating them in hot sand. They can also be blued by placing them in sheet-iron boxes suspended in a furnace in such a way that they can be tilted from side to side, so as to cause the articles to move or slide about. In either case, the operator watches the articles until the desired color is obtained, when the work

is quickly removed and allowed to cool in the air. With care, very beautiful colors may be produced in this manner.

A sand-drawing furnace arranged to shower hot sand over the work may also be used for bluing steel.

HAMMER WORK

POWER HAMMERS

BEAM POWER HAMMERS

1. Definitions.—A **power hammer** is one that is operated by a belt driven by a shaft, and not by a direct-connected steam cylinder; the latter is called a **steam hammer.** Power hammers are classified, according to the manner of striking the blow, as **helve hammers,** which have very large handles, or *helves;* **trip hammers,** which trip from a cam; and **drop hammers,** which are lifted and allowed to drop.

2. Trip Hammers.—One of the earliest forms of power hammer was the trip hammer with a large helve, as shown in Fig. 1. It consisted of a beam, or helve, *a*, supported near one end by trunnions *f*. The shorter end was covered

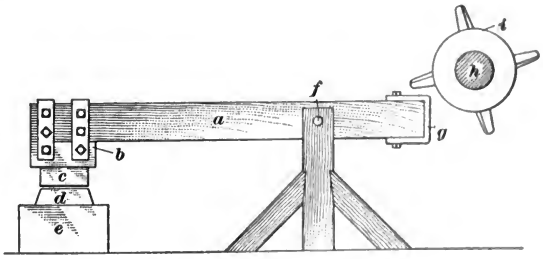

FIG. 1

by a metal strap, or shell, *g*, and to its longer end was attached a weight *b* for a hammer head. To this was keyed the hammer face *c*, while the anvil face *d* was keyed to the anvil *e*. A toothed wheel *i* was so mounted on the power shaft *h* that

COPYRIGHTED BY INTERNATIONAL TEXTBOOK COMPANY. ALL RIGHTS RESERVED

the teeth, or cams, came into contact with the shorter end of the beam and depressed it, thus raising the hammer *b*. As soon as the cam slipped from the beam, the hammer *b* fell and struck the work on the anvil. These hammers were run quite rapidly, yet compared with modern hammers they worked slowly. The rapid wear of the cam parts, the large floor space occupied, the relatively slow action, and the lack

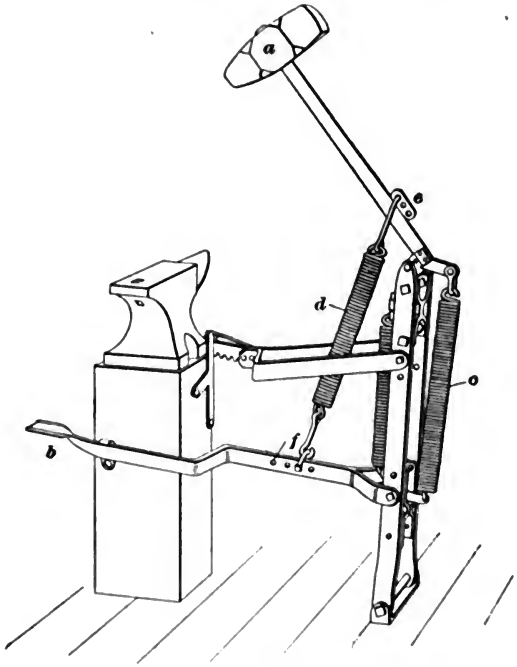

FIG. 2

of control, have caused this style of hammer to be almost wholly displaced by more modern types.

3. **Foot-Operated Hammer.**—In small blacksmith shops, it is not always possible to keep a helper for doing the heavy striking, for the work requiring heavy striking is so intermittent that it would be difficult to keep the helper busy for the remainder of the time; for this reason the foot-power

hammer shown in Fig. 2 was invented. It consists of a heavy sledge *a* hung with a suitable controlling mechanism, of springs and levers, arranged in such a manner that it can be brought down on the work by pressing down the lever *b*. The spring *c* holds the hammer in its upper position, while the spring *d* transmits the pressure of the foot to the hammer handle. The tension in the springs can be regulated by moving the hook to the different holes *e*, or the clevis to the different holes *f*. The position in which the sledge strikes on the face of the anvil can be controlled by a lever near the horn of the anvil, which is not visible in the illustration.

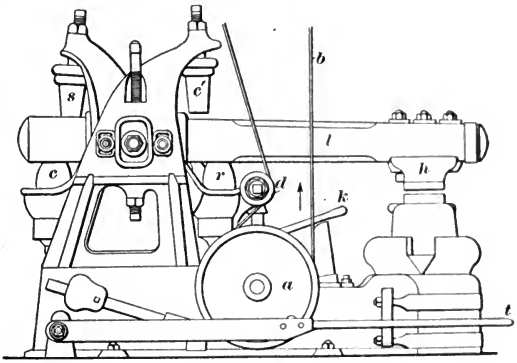

FIG. 3

4. Rubber-Cushioned Helve Hammers.—As the general defects of the trip hammer have long been recognized, the many attempts made to correct them have resulted in a great many types of forging hammers. Where a large number of rapid blows are to be struck on work that is being considerably reduced in size as it is being hammered, some form of elastic support should be provided for the hammer head. A wooden beam has been found to serve this purpose remarkably well, and is used in a great many power hammers; in others, rubber cushions are used. Fig. 3 shows a modern hammer of this class. The beam and hammer resemble those shown in Fig. 1, but the power is transmitted by belt instead of by cams. In this case, the

beam *l*, carrying the hammer head *h*, is operated by an eccentric device that moves the rubber cushion *r* up and down. When the eccentric throws the cushion up, it raises the right-hand end of the beam, compressing the rubber buffers *c*, *c'*. As the eccentric causes the rubber buffer *r* to descend, the hammer falls not only by its own weight, but also because of the elasticity of the buffers *c*, *c'*. The use of these rubber buffers makes the action of the hammer positive and quick, and causes it to do much better work. The position of the hammer head in relation to the anvil is controlled by the lever *k*, that is, the beam *l* can be shifted lengthwise by this lever. When the hammer is not in operation, the belt *b* runs loosely about the pulley *a*, without causing it to turn. When it is desired to start the hammer, the pressure of the foot on the treadle *t* brings the tightening pulley *d* into contact with the belt, taking up the slack and causing the pulley *a* to turn and operate the hammer. When the treadle *t* is released, a brake is automatically applied to the driving shaft and the hammer is instantly stopped. The parts are so arranged that the hammer always stops at the upper point in its stroke.

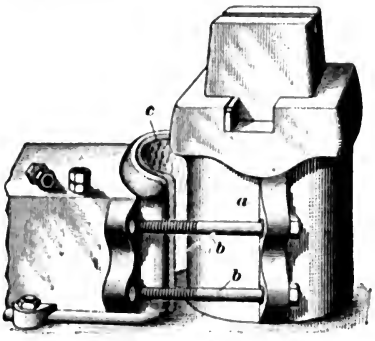

FIG. 4

The anvil should be mounted on a separate foundation, so that the continual use of the hammer will not have a tendency to break the frame of the hammer, and also so that the upper and lower dies can be kept in line. In the hammer shown in Fig. 3, the anvil is secured to the hammer frame by straps, while bolts through lugs are used in the one shown in Fig. 4, the anvil block *a* being secured to the frame by bolts *b*. A layer of packing composed of wood or fiber is placed between the frame and the anvil block as shown at *c*, and the nuts screwed on and tightened.

GUIDED POWER HAMMERS

5. Upright Helve Hammer.—In order to keep the dies of the hammer in line more perfectly than is possible with the ordinary style of helve hammer, various styles of hammers, in which the hammer dies are guided, have been brought out. In some, wooden helves are used, and the hammers are connected as shown in Fig. 5; in others, steel

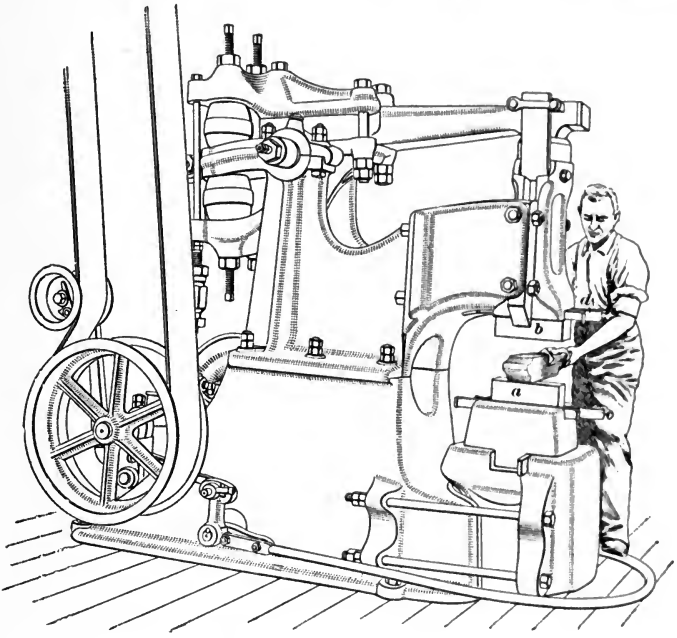

FIG. 5

helves terminate in bows from which the hammers are hung by straps or by spring connections. The former are called **upright helve hammers**, and the latter **strap hammers.** The strap hammers are especially suitable for the smaller sizes, as they give a very flexible connection, suitable for fast running. In the case of the helve hammer illustrated in Fig. 5, the anvil carrying the lower die is

supported on a separate foundation from that which supports the hammer frame. The hammer dies *a*, *b* are held in place

TABLE I

CAPACITY OF RUBBER-CUSHIONED HELVE HAMMERS

Weight of Hammer Pounds	Average Number of Blows per Minute	Average Size of Iron for Which Suited Inches	Approximate Horsepower Required
15	435	$\frac{3}{4}$	$\frac{1}{2}$ to $\frac{3}{4}$
25	400	1	$\frac{3}{4}$ to 1
40	300 to 315	$1\frac{1}{4}$	$1\frac{1}{2}$ to 2
60	290 to 300	$1\frac{3}{4}$	2 to $2\frac{1}{2}$
80	275	2	$2\frac{1}{2}$ to 3
100	275	$2\frac{1}{2}$	$2\frac{1}{2}$ to 3
200	225 to 240	$3\frac{1}{2}$ to 4	3 to $3\frac{1}{2}$

TABLE II

CAPACITY OF CUSHIONED UPRIGHT HELVE HAMMERS AND STRAP HAMMERS

Style and Weight of Upright Hammer in Pounds	Average Number Blows per Minute	Average Size of Iron for Which Suited Inches	Approximate Horsepower Required
15 strap hammer only	400	$\frac{5}{8}$ to $\frac{3}{4}$	$\frac{1}{2}$ to $\frac{3}{4}$
30 strap hammer only	350 to 375	1	$\frac{3}{4}$ to 1
50 either strap or helve hammer	300 to 315	$1\frac{1}{4}$	$1\frac{1}{2}$ to 2
75 either strap or helve hammer	300 to 315	$1\frac{1}{2}$	$1\frac{1}{2}$ to 2
100 either strap or helve hammer	275 to 300	$1\frac{3}{4}$	2 to $2\frac{1}{2}$
125 either strap or helve hammer	275 to 300	2	2 to $2\frac{1}{2}$
150 either strap or helve hammer	250 to 275	$2\frac{1}{2}$	$2\frac{1}{2}$ to 3
200 either strap or helve hammer	200 to 225	3	3 to $3\frac{1}{2}$
300 helve hammer only	175 to 190	$3\frac{1}{2}$ to 4	$3\frac{1}{2}$ to 4
500 helve hammer only	150 to 175	4 to 5	5 to 6

with keys *c*, *d*. The operation of the hammer is controlled by a loose belt and tightener, as already described, and the

parts are so arranged that the hammer always comes to rest at the top of its stroke.

The power required by, and the capacities of, these hammers, as given by one manufacturer, are shown in Tables I and II. Table I is for rubber-cushioned helve hammers, and Table II for cushioned upright helve hammers and strap hammers. The sizes given for iron should be

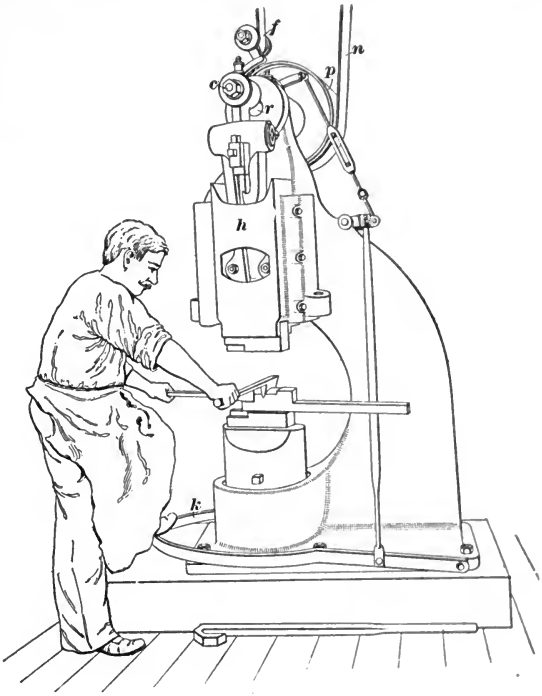

FIG. 6

reduced one-third when applied to steel. These sizes are only approximate, as any hammer will do both larger and smaller work; they are, however, the sizes for which each hammer is especially suitable for continuous service.

6. Forging Hammers.—A somewhat different type of forging hammer is shown in Fig. 6. In this class, the

operating mechanism is all at the top, but as in the cases already described, the hammer is started and stopped by shifting the tightening pulley *f*, which is connected with a foot-treadle *k*; when the hammer is not in use the belt *n* runs loose about the pulley *p* without causing it to turn, and is thrown into action by the pulley *f*, which takes up the slack in the belt. The length of stroke of the hammer can be adjusted by shifting the crank-pin *c* in the slot *r* of the crank. In the style shown, the hammer frame surrounds the anvil, so that the latter may be provided with a separate foundation and still be in line with the hammer head *h*.

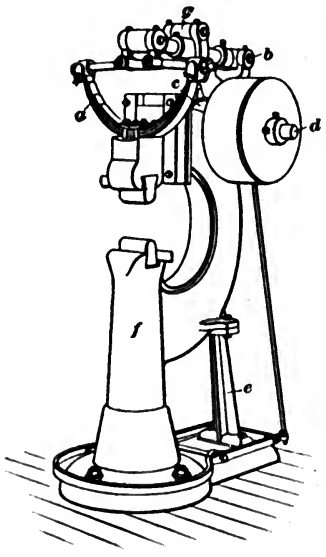

FIG. 7

Forging hammers are frequently made in the form shown in Fig. 7, the hammer head being hung from the helve, or operating mechanism, by the bow spring *a*. The helve fulcrum, or trunnion, *b* is supported from the frame, and the motion is transmitted to the helve by a rod connecting the rocking joint *g* with the eccentric *c* that is on the shaft *d*. The brace *e* supports the back part of the frame, making the hammer more rigid without greatly increasing its weight. In this machine, it will also be noticed that the anvil *f* is a portion of the frame, and hence all the force of the blow must be absorbed by the work on the anvil. This is especially advantageous in the case of small hammers.

POWER-HAMMER WORK

7. Breaking Down.—Power hammers are frequently used for the heavy roughing or breaking down of work that is finished under a drop hammer. In many cases, this breaking down can be done between flat dies, as in the hammer shown in Fig. 5, while in other cases it is better to use dies with convex or curved faces, as shown in Fig. 7, which act like fullers. If the work is round, it is turned slightly after each blow of the hammer. Rectangular work is also frequently drawn to a taper, between either plane or curved dies. One great advantage of the power hammer for this class of work is that the blows are very much more rapid than in the ordinary drop hammer, and hence the breaking down can be done more quickly. These power hammers will be found exceedingly useful for work in an ordinary jobbing blacksmith shop, or in tool dressing; for boring tools and similar pieces can be drawn out very quickly and effectively with them.

8. Finishing Work Under a Power Hammer.—Some classes of forgings can be finished under a power hammer with good results; an example is the eyebolt shown in Fig. 8, in which *a* and *b* are views of the finished forging. The hole *d* is drilled after the forging is completed. Dies, of course, are necessary for this work. First the work may be necked down, as shown at *e*, using one portion of the dies. It is then given the form shown at *f*, by means of another portion of the dies; a fin will usually form on the end, as shown by the dotted lines at *c*, but this can be trimmed off by hand or with suitable dies. The forging is then given a quarter turn and the portion *f* is struck a few blows between flat faces, which will bring it to the form

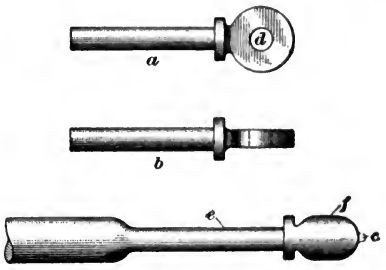

FIG. 8

shown at *a* and *b*. Such forgings usually do not have to be brought down to exact dimensions. It is possible, however, to do very good and quite accurate work under a power hammer. Punches for making rivet holes in sheet metal, such as boiler plate, may be forged on a power hammer. By using suitable dies, the punches may be brought to such a degree of perfection that they will require very little machine finishing, the diameter of the punch being forged to size. Power hammers are especially useful in forging round work, that is, work that can be turned or rotated between the dies while forging.

STEAM HAMMERS

9. Steam Helve Hammers.—For many years the heaviest forging hammers were beam, or helve, hammers, directly operated by steam; the modern **steam hammer** is the natural development of this type. A steam-operated helve hammer is shown in Fig. 9. The middle of the beam *a* is encased in metal *d* to which is attached a shaft, or trunnion, *e*; just forward of the trunnion is a steam cylinder *f*, with a suitably controlled mechanism. The steam acting under the piston forces up the beam, raising the hammer head *c*. When the steam beneath the piston is exhausted, the hammer head falls, striking the blow on the work on the anvil. To hasten the action of the hammer and to increase the energy of the blow, a spring timber *g* is mounted in such a way that the back end of the beam *a* strikes and depresses it when the hammer is in its uppermost position. The spring timber is bent down and on its rebound serves to start the hammer downwards very quickly. The spring timber is usually a hickory beam at least 8 feet or 10 feet in length. The method of mounting the hammer, together with the details of its foundation, is shown in Fig. 9. The anvil foundation is separate from the hammer foundation.

One of the greatest objections to steam helve hammers is that the faces of the anvil and hammer are not parallel when

the blow is struck, and there is always a tendency to crowd the work outwards or away from the bearing of the beam. This effect, however, is slight. Another objection is the large floor space occupied.

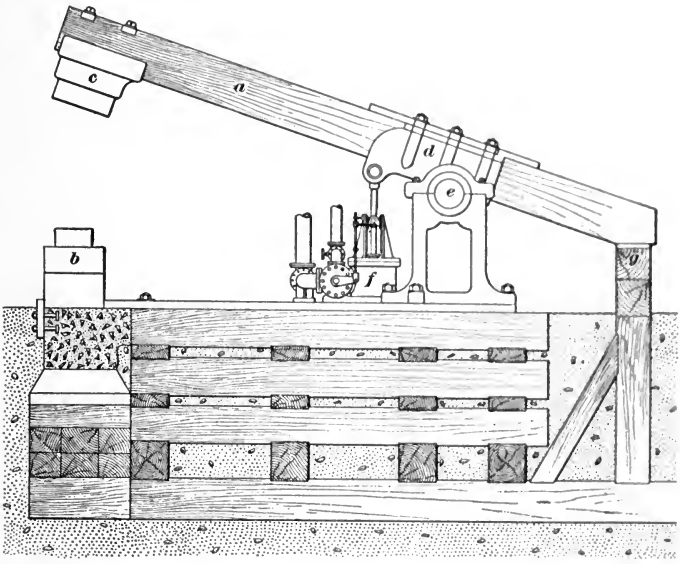

FIG. 9

10. Steam Forging Hammer.—There is a large variety of steam forging hammers, as different styles have been designed to meet different conditions. In Fig. 10, the hammer head *a* carries the upper die *b*, which strikes the die *c* keyed to the anvil *d*. The hammer head *a* is keyed to the rod *e*, which is connected to a piston working in the cylinder *f*. Steam may be admitted to the cylinder, either above or below the piston, by a suitable valve mechanism controlled by the lever *g*. The lever *k* operates a throttle valve for shutting off the steam from the controlling valve when the hammer is not in use. When steam is admitted below the piston, the piston and the hammer are raised. The blow can then be struck by simply allowing the steam

to exhaust and the hammer to fall. A very much harder blow can be struck by admitting steam above the piston to drive it down. The steam also starts the piston more quickly, and more rapid blows may be struck.

Among the special advantages of the steam forging hammer are the small floor space occupied for a given capacity as compared with the helve hammer, and the better control of the blows, and the position of the dies in relation to each other. When the steam forging hammer is not in use, the hammer head descends and rests on the lower die.

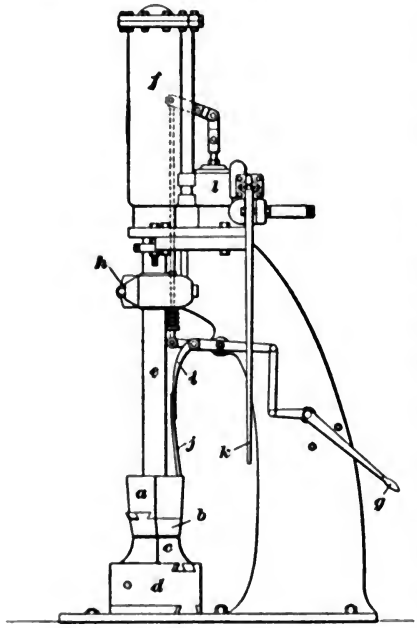

FIG. 10

11. Steam-Hammer Valves.—In steam hammers, it is customary to supply a throttle valve at the point where the steam enters the valve chest, and a controlling valve for admitting steam to both sides of the piston; this controlling valve is usually some type of slide valve, but a rotating valve is sometimes used. One arrangement of the valves is shown in Fig. 11. The throttle valve *a* for shutting off the steam is operated by a lever *k*, Fig. 10. The controlling valve in this case is a hollow piston valve *b*, Fig. 11, around which the steam passes to the ports *c*, *d*, and through which the exhaust from the ports *c*, *d* passes to reach the exhaust passage *e*.

In the position shown, steam is entering through the throttle *a*, passing around the controlling valve *b*, filling the

passage *f* that surrounds the valve, and passes through the lower port *d*, as shown by the arrows, into the cylinder beneath the piston. At the same time, the steam on top of the piston is exhausting from the cylinder through the port *c*, which connects with the top of the cylinder, through the center of the valve *b* and out the exhaust passage *e*, as shown by the arrows. The hammer will, therefore, rise until the

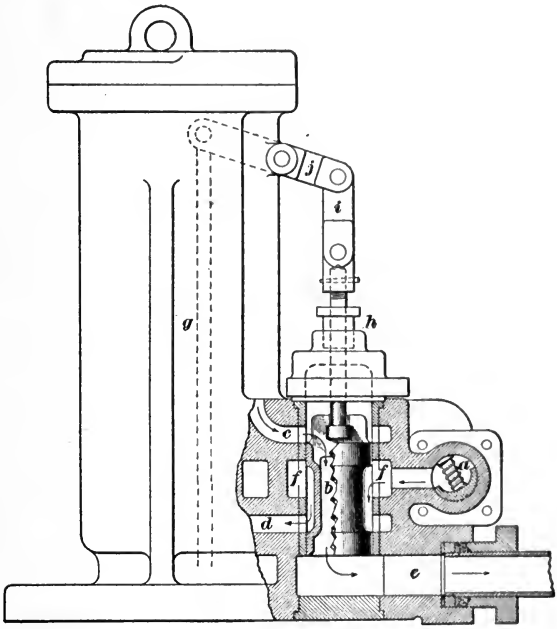

FIG. 11

piston reaches the top of the stroke, unless the valve *b* is raised to close the passage of the steam to the port *d*. To force the hammer down, the controlling valve must be moved so that steam will pass from *f* through *c* to the top of the cylinder, and steam from the other end will exhaust through the exhaust passage to the outer air.

The rod *g*, shown dotted behind the cylinder, is attached to the lever *j* and, with link *i*, lifts the valve stem and the valve.

The valve stem passes through a stuffingbox *h*, which prevents steam from leaking out around the stem.

The rod shown behind the cylinder in Fig. 10 is also for the purpose of moving the valve, and is operated, through links, as shown, by the lever *g*. In this case, the rod is lowered in order to raise the controlling valve in the valve chest shown at *l*, the arrangement being very much like that shown in Fig. 11.

12. Control of Steam Hammers.—Steam hammers are controlled either by hand or by automatic controlling mechanisms. The hammer shown in Fig. 10 may be controlled by the lever *g*; or it may be controlled automatically by means of cam *i*, which comes in contact with the inclined piece *j* on the hammer head. This cam operates the valve mechanism and reverses the hammer for another stroke. A mechanism of this kind is placed on all forging hammers, and enables the operator to make the hammer strike a series of uniformly light or heavy blows as the case may require, thus operating the hammer automatically. In the position shown in Fig. 10, the valve is down and steam is entering below the piston; as the piston rises, the inclined piece *j* will force the cam *i* to one side and reverse the valve, causing the hammer to strike. As the hammer comes down, the cam *i* will be moved back so as to raise the rod behind the cylinder, causing the valve to lower and thus admitting steam below the piston to raise the hammer.

13. Steam Drop Hammer.—One form of steam drop hammer is shown in Fig. 12. This hammer differs from the steam forge hammer in that the head *a* moves between adjustable guides *b*. Another point of difference is that the anvil *c* and the frame of the hammer are on the same foundation; in fact, the anvil supports the frame. The steam is used for raising the hammer head, which does its work by falling, as in the case of the ordinary drop hammer. For this reason, the name steam drop hammer has been applied to this type of hammer, although provision is made in the best hammers by which steam can be used above the piston to

increase the force of the blow. The piston is always under instant control by the foot-treadle *d*, which stands across the front of the machine.

When the steam drop hammer is not in use, the mechanism automatically raises the hammer head and holds it in its highest position. Such a hammer may be fitted with suitable dies and used for forging operations, but as a rule it is not so well adapted to this work as the regular steam forging hammer.

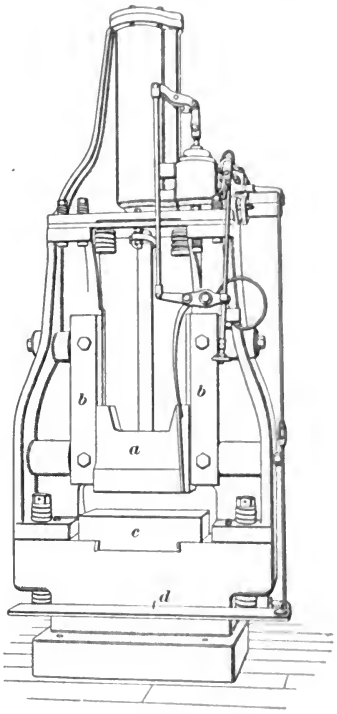

FIG. 12

14. Types of Hammer Frames.—In forging, the hammers commonly used are divided into two classes, known as *single-* and *double-frame hammers*. The single-frame type, Fig. 10, is best for small or light work because there is only one standard or leg to interfere with bringing the work to the hammer dies, and with moving the work about while forging. As a rule, double-frames, Fig. 13, are used only on the larger sizes of forging hammers, and ample space is usually left about the anvil to permit the introduction of both the work and the tools. In both the single- and double-frame hammers the dies are generally set at an angle of 45° to the frame, as shown at *b* and *c*, Fig. 10, and *a* and *b*, Fig. 13. Setting the dies at 45° to the face of the frame permits long work to be placed either across the dies or along their length, and allows the work to be handled under the hammer without striking the

frame. It also permits the use of hand tools, which are placed on top and at right angles to the work, without serious interference by the frame.

In the hammer shown in Fig. 13, the steam cylinder *e* is a separate casting that is bolted on opposite sides to the side frames *f*, *g*. The piston has an upper rod, or tailrod, *d*, which is flat on one side to prevent the piston and hammer from

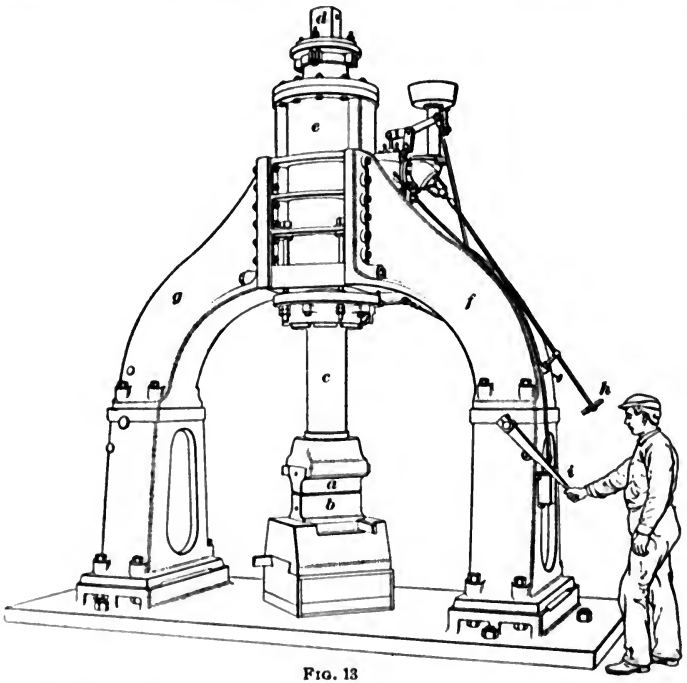

FIG. 13

turning. There is no foot-lever for operating this hammer; the hand wheel *h* is attached to the rod that moves the throttle valve, and the lever *i* is connected to the valve that controls the admission of steam to, and the exhaust from, the cylinder.

15. Hammer Guides.—In the case of steam hammers, it is necessary to provide some form of guide that will keep

the upper and lower dies in line. There are two types of guides in common use. In one type, the piston rod is made of comparatively small diameter, and the weight is

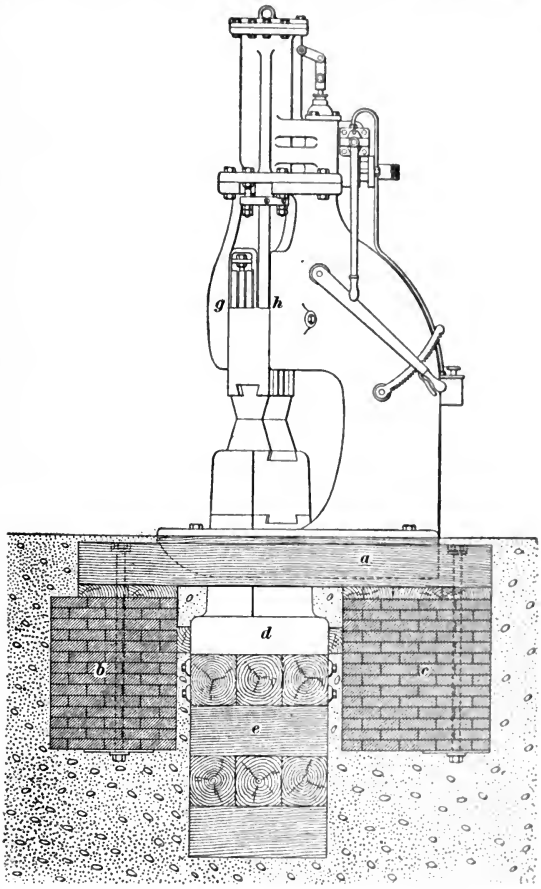

FIG. 14

concentrated in the hammer head, as shown at *a* in the steam drop hammer, Fig. 12. The hammer head is guided independently of the piston in the cylinder by guides *b*, *b*, located below the cylinder. In the single-frame forging hammer

shown in Fig. 10, a short guide is provided at *h*; while in the hammer shown in Fig. 14, the hammer head is guided between the overhanging portions *g*, *h* of the frame.

The other type of guide is that in which the cylinder heads act as the guides, as shown in Fig. 13. This style of hammer is known as the *Morrison* type, after the name of its inventor. The weight, instead of being concentrated in the hammer head, is distributed in the hammer and in the long bar or piston rod *c*. Guides are provided in the upper and lower cylinder heads; and as these guides are a considerable distance apart, it is possible to line up the dies very accurately. The relatively large diameter of the bar that forms the piston rod makes it very strong, so that very heavy blows may be struck without danger of breaking or springing it.

16. Proper Weight of Hammer.—When wrought iron was the only material worked under the steam hammer, it was not so necessary to provide heavy hammers, as the forgings were built up by welding a large number of thin slabs together; these thin slabs were affected clear through by blows from a relatively light hammer. During this building-up process, all the metal in the forging was thoroughly worked. The metal also had been subjected to considerable hammering to produce the slabs from which the forging was built up; this hammering tended to produce a forging of good quality. The introduction of steel forgings developed an entirely new set of conditions. The structure of steel differs from that of wrought iron, and it requires much more work to produce a given effect on a piece of steel; so that for a given thickness of metal a heavier hammer is required. In making steel forgings, it is necessary also to work them down from relatively large billets, and a large enough mass must be taken to produce the finished forging, as steel cannot be welded in large pieces.

On large forgings, therefore, it is necessary to use a large billet and a heavy enough hammer, so that the blow will penetrate to the center of the work. If a heavy enough hammer is used, and the center of the piece receives a

sufficient amount of working, the end of the forging will be convex, as shown at *a*, Fig. 15. If the hammer is too light for the forging, the blows will only affect the outer surface of the metal, stretching it and causing the ends to be dished, or concave, as shown at *b*, Fig. 15. When the surface metal is stretched in this way, it has a tendency to tear away from the inside metal, forming a series of cracks, and in some cases openings of considerable size. If the hammer is not heavy enough, therefore, to make the ends of the work assume the form shown at *a*, Fig. 15, it is too light for the piece being forged, and only poor results can be expected.

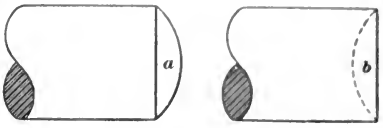

FIG. 15

17. Hammer Foundations.—In most cases, steam-hammer manufacturers recommend the placing of the anvil and the hammer on separate foundations. A foundation for a single-frame hammer is shown in Fig. 14. The frame of the hammer is supported on timbers *a*, carried on brick piers *b*, *c*. Between these brick piers is arranged a timber foundation *e*, on which the anvil block *d* is mounted. A foundation for a double-frame hammer is shown in Fig. 16. In this case the frame of the hammer is supported on two piers *a*, *b*, while the anvil block *c* is supported on the timber foundation *d*.

Recently, some manufacturers have advocated the use of rigid concrete foundations for both the hammer and the anvil. This construction necessitates the use of very much heavier anvil blocks and hammer frames, but it makes the blows of the hammer more effective, as the work absorbs all the energy of the blow instead of having a large portion of it dissipated owing to the spring of the anvil. There is one advantage, however, in favor of wooden or elastic foundations, and that is that the slight yielding causes the work of the blow to be distributed over a longer interval of time than on a solid foundation. This slower action permits the force of the blow to penetrate deeper, thus causing the

metal to be worked more thoroughly than when the anvil is set on a solid foundation. Sufficient elasticity to allow the

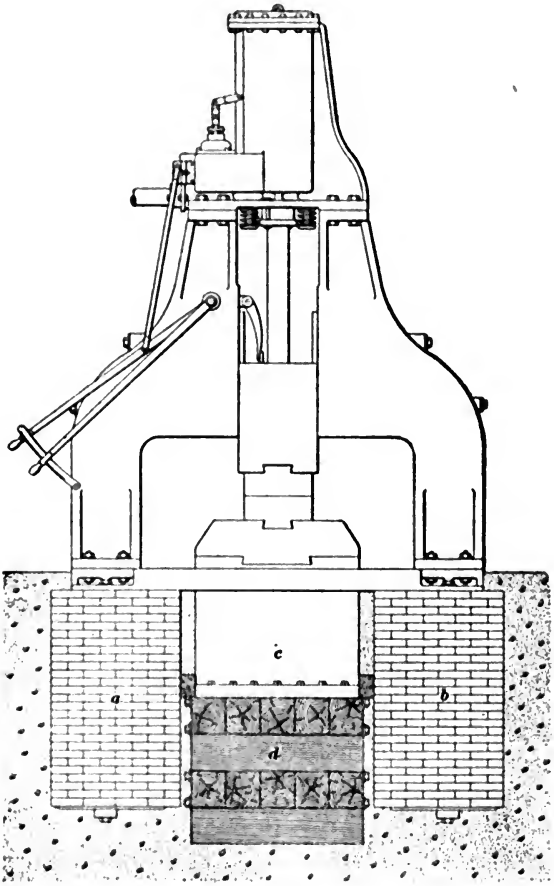

FIG. 16

effect of the blow to penetrate to the center of the work is necessary for forging steel

HAMMER TOOLS

18. Porter Bars.—In welding up large shafting from scrap it is necessary to have a starting piece, so that the forging can be handled to advantage. The starting piece for forging a shaft is called a **porter bar**, Fig. 17, and con-

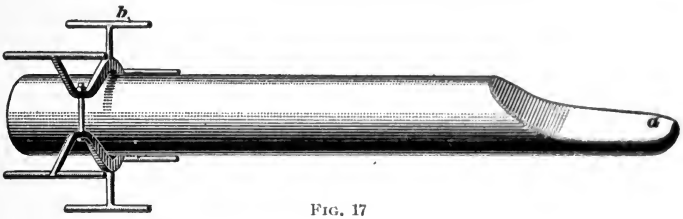

FIG. 17

sists of a short section of shafting of about the same diameter as the desired shaft, to which pieces may be welded to form the shaft. One end *a* is forged to a shovel shape to receive the bars or stock to be welded on. Where iron shafts of different diameters or other iron forgings are being made, several sizes of porter bars are always kept on hand.

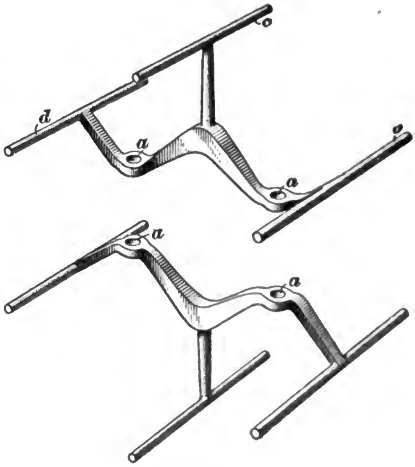

FIG. 18

19. Stocks.—For turning and handling the porter bar or the entire forging, **stocks** *b*, Fig. 17, are employed; they are shown in greater detail in Fig. 18. Two such stocks are generally used, being held together by bolts passing through the holes *a*, *a*. The handles *b*, *c* and *d* are so arranged that when the stocks are clamped to the work as shown in

Fig. 17, the six handles of the two stocks will be located at approximately equal distances apart, around the work. For handling square work, a stock of the form shown in Fig. 19 is frequently used.

Fig. 19

20. Hacks or Cutters.—A hack is used for cutting off hot work under either steam or power hammers. The ordinary blacksmiths' hot chisel is not suitable for such work, as it is too high and slender. It is of the general form shown at *a*, Fig. 20 (*a*). The cutting edge is not as sharp as the

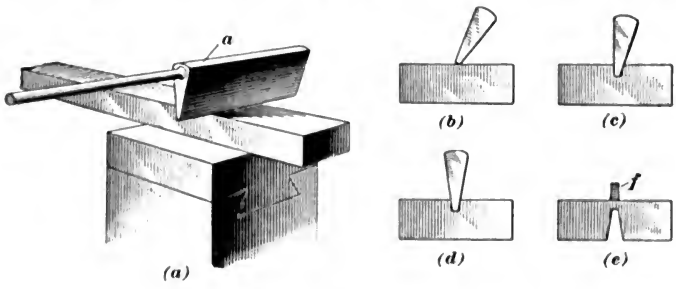

Fig. 20

cutting edge of the ordinary hot chisel, and the tool must be held vertical when struck with the hammer. When it is in an inclined position, as shown in Fig. 20 (*b*), the hammer is liable to knock the hack over on its side and bed it into the work, possibly ruining the piece. When it is desired to

form a square shoulder, the hack must be held with one side vertical, as shown in Fig. 20 (*c*). When it is simply desired to cut off the work in order to form separate billets or pieces of metal, the hack is driven straight down, as shown in Fig. 20 (*d*). The hack is driven nearly through the piece from one side, the piece is then turned over, as shown in Fig. 20 (*e*), and a small bar, equal in width to the flat end of the cutter is placed as shown at *f* and driven through with a single sharp blow of the hammer. This cuts out a core, equal in width to the bar *f*, and so avoids the formation of a fin on either piece. Such a fin would be very objectionable at a weld, as it would probably cause a defect in the forging where the weld was made.

For marking the work at points from which it is to be drawn down, that is, for marking shoulders, a piece of round iron of small diameter is frequently used, it being driven into the shaft by the hammer as the shaft is slowly rotated. Frequently a bar of square iron is used for shouldering down work, but this method leaves a sharp corner at the bottom, which is liable to cause a defect during the subsequent forging operations.

FIG. 21

For nicking work cold under the hammer, a cold chisel of the form shown in Fig. 21 is frequently used. It consists of a blunt triangular piece of carbon steel that is hardened and tempered to a blue; it usually has a round handle of low-carbon steel or iron forged to it, and the back of the chisel is somewhat round, as shown in the illustration.

21. Swages.—Sometimes ordinary two-part **swages** are used for small hammer work; the upper swage being fitted with a handle, as shown in Fig. 22 (*a*). Frequently, the handle is drawn down flat near the swage, as shown at *a*, so as to allow it to spring and thus avoid stinging the hands of the man holding it. When a bottom swage is made to go with a top swage, it may be provided with projections or lugs, shown in Fig. 22 (*b*), to hook over the face

of the anvil. In most cases, if there are two projections on one side there is only one projection on the other side.

In other cases, the top and bottom swages are connected. Fig. 23 (*a*) shows a form in which the handles of the swage are made from 1-inch round steel with a spring at the end *b*, made from $\frac{3}{8}'' \times 2''$ stock. The handles *a*, *a* in this case are about 42 inches long. The spring *b* serves to keep the two parts of the swage separate at all times. Another type of swage is shown in Fig. 23 (*b*). In this case, the handles *a*, *a* are about 4 feet long, and are made of $\frac{1}{2}'' \times 2''$ steel; they are secured together at the end by a band *b* and the rivet *c*. In other cases, two rivets are used in place of the band and rivet; and sometimes, to hold the two parts in line, a small pin about

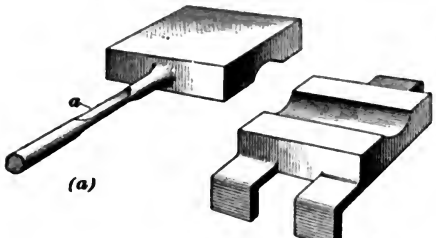

FIG. 22

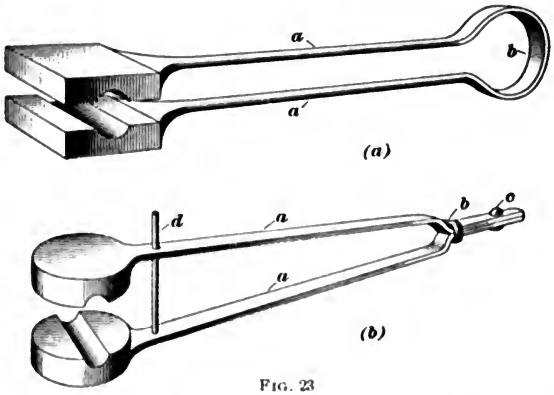

FIG. 23

$\frac{1}{2}$ inch in diameter is passed through a hole in the upper handle, as shown at *d*, the hole being at least $\frac{1}{32}$ inch larger in diameter than the pin. The pin is fastened securely in the lower handle either by tapping and screwing

it in, or by locknuts on top and bottom. These guide pins are quite necessary in the case of swages that are to do fairly accurate work.

For drawing work to a taper under the hammer, a fuller of the form shown in Fig. 24 (*a*) is frequently used. For drawing down the work, the fuller is held as shown at *a*, Fig. 24 (*b*); while for smoothing the work, it is turned over and used as shown at *a*, Fig. 24 (*c*).

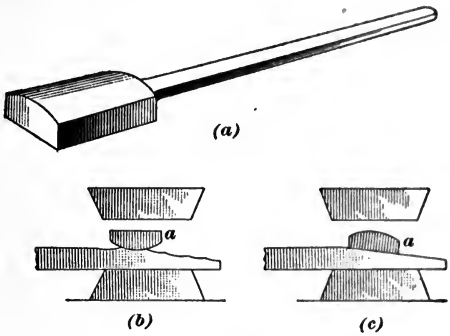

FIG. 24

22. Dies for Steam Hammers.—While in the steam hammer plane or flat dies are generally used for forging work, forming dies are also used. For instance, in the manufacture of steel wheelbarrows, large cast-iron forming dies are used on the steam hammer. The furnace for heating the sheet-steel pieces for the wheelbarrow bodies is located close to the hammer. When properly heated, one of the sheets is placed on the lower die, which is concave, and held in the proper position by stop-pins on two sides. The upper die is brought down slowly on the lower die, and the steam then turned on to force down the metal. The upper die is then raised, and one or two light blows struck to remove all creases and cause the sheet to fit the dies perfectly.

This same method may be used for forming a large variety of work, such as elevator buckets and similar pieces. The steam hammer is also sometimes fitted with swage dies and used for drawing down round pieces, such as special axles, etc.

In Fig. 25, the cast-iron dies a, c attached to the steam hammer are used for forming the piece e, shown at the base of the hammer. The upper die is shown keyed to the ram, or hammer head b, while the lower die c is keyed to the anvil. The curve g of the lower die makes the curve f on the piece, and the angle h on the upper die makes the angle i on the piece.

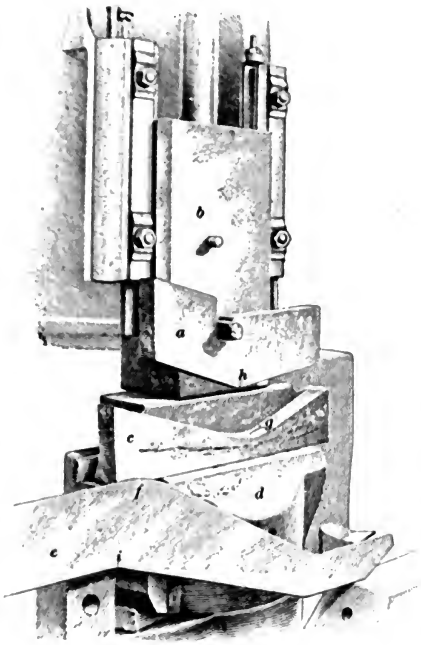

FIG. 25

The upper die in the steam hammer does not have a fixed stroke, as in the case of some forging machines, but the length of the stroke is controlled by the operator. A mark may be placed on the ram or hammer head and another on the guide to indicate the lowest position of the hammer, otherwise the hammer may have to be stopped and the piece measured before it is brought down to the finished size. An experienced man, however, may depend on his judgment to determine when the piece has been reduced to the proper size.

EXAMPLES OF HAMMER WORK

FORGING WROUGHT IRON

23. Welding Up Scrap.—Large wrought-iron forgings are generally made by welding up scrap, because the reworked metal shows a better grain and a closer structure than could be obtained by new metal taken directly from the puddling furnace. The scrap is sheared, or cut into pieces of the required size, and piled up on small boards, usually about 10 inches by 18 inches, as shown in *Iron Forging*. These boards, with the scrap piled on them, are then placed in a heating furnace and the iron is brought to a white welding heat; this usually requires about 30 minutes in a good fire. Steel scrap cannot be welded in with wrought-iron scrap. If any high-carbon steel is placed with the wrought-iron scrap, it will be melted at the welding heat of wrought iron and will run out. Low-carbon steel, however, will sometimes resist melting and remain in the pile, but as a rule it does not make a perfect weld, and hence should be avoided whenever possible. When a pile has been heated through, it is taken from the furnace with a large pair of tongs and carried to the hammer. In most cases, a steam helve hammer, like that shown in Fig. 9, is used for this work While the scrap is heating in the furnace, a bar of iron, called a **staff**, is prepared for a handle by having one end brought to a welding heat in a separate furnace. When both the staff and the scrap are heated properly, the staff is placed on the mass of scrap on the anvil, so that the first blows of the hammer weld them together. The staff is then used for handling or moving the pile as it is forged down. The staff

FIG. 26

is cut off with a hack when the forging is completed. The resulting forging made by welding up scrap is called a **slab**, or **shingle slab**, Fig. 26, and the operation is frequently called *shingling* or *fagoting*.

A good sound iron forging can be built up of relatively small slabs; Fig. 27 shows the end, sometimes called a

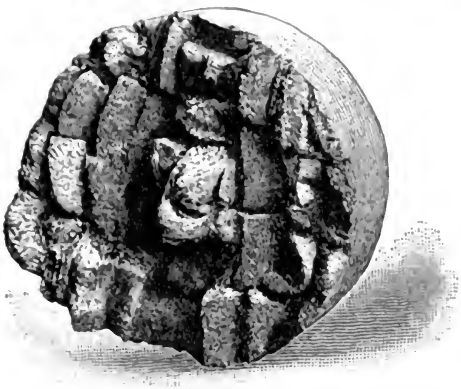

FIG. 27

crop end, cut from a large shaft forged from iron slabs. The crop end shown was only 8 inches long, and yet the circumference, which was rough-turned, showed good metal almost to the end. On the back or flat side, not shown, where it was cut off, the metal was perfectly uniform, there being no visible indication of cracks between the slabs from which the piece was made.

24. Making Axles.—For forging car axles, three or more shingle slabs containing the requisite amount of iron are piled up, placed in the furnace, and brought to a welding heat. For an axle that is to weigh, say, 630 pounds in the rough, two 225-pound slabs and one 180-pound slab may be taken. The lighter or thinner slab is placed between the others, because this method has been found to make a stronger axle. It takes from 30 to 40 minutes to bring such a pile to a welding heat. The three slabs are then taken out of the furnace, placed under the hammer, and a little more

than half of the length welded together and brought to near the finished size. After the pieces have been struck a few blows on the flat to weld them together, they are forged square, then octagonal, and finally round. This is termed *rough welding*, or simply *roughing*.

After one end of the piece has been rough-welded, the other end is placed in the furnace, with about a foot of the welded end projecting to serve as a handle. After from 10 to 15 minutes of heating, it is removed, put under the hammer, and the other end welded down, drawn out square, then octagonal, and finally round. This end is then forged to the finished size. The piece is then reversed, reheated, and the end that was first rough-welded is forged to the finished form.

25. Forging Large Iron Shafts.—For forging very large shafts, slabs are placed on the thin end of the porter bars. These slabs are piled on the end of the porter bar, brought to a welding heat, welded together, and forged into the shape of the required shaft. The end is then brought down to a shovel shape, another set of slabs piled on, heated and welded, the operation being repeated until the shaft is of the required length. As already pointed out, in forging such a shaft from iron, only sufficient work to penetrate the piece being welded and to insure a perfect weld is necessary; hence, only a sufficient number of fagots are piled up to make the forging slightly in excess of the required diameter, as this very greatly reduces the work of forging the shaft to the finished size.

When no porter bar is used for starting the shaft, it will be necessary to pile up several slabs, weld them together, flatten out the end, and use this as a staff or porter bar for forging the shaft. The piece used as a porter bar must always be round, so that it can turn in a sling chain as the work is moved under the hammer. Shafts are usually forged up under large double-frame steam hammers, as the steam helve hammer is scarcely ever heavy enough for this work.

FORGING LOW-CARBON STEEL

26. Precautions in Forging Steel.—In forging steel the following important precautions should be observed: The ingot is essentially a coarse-grained steel casting, and to convert it into steel of the best quality it must undergo considerable forging, in order to produce a dense structure and bring out the best qualities. In practice, it has been found that for round work the ingot must be at least one and one-half times the diameter of the finished forging, and it is even better to have it slightly larger.

The hammer or press under which the forging is done must be sufficiently powerful to affect the ingot to its center from the very first of the work, and the effect of this complete working will be shown by the bulging of the central portion of the end of the piece being forged.

In heating steel for forging, it must be heated slowly, but without undue soaking, that is, without heating longer than is necessary. If a cold ingot is placed in the furnace and heated rapidly, the outside may be expanded so rapidly that it will be torn from the interior. Any cracks caused by this sudden heating will form serious defects in the forging. The proper temperature for forging varies with the character of the steel, and especially with the percentage of carbon it contains. The temperature must not be near the melting point, and, on the other hand, must always be well above the point of recalescence.

27. Welding Steel.—Steel billets, blooms, or ingots should never be welded together to build up a forging, as it is practically impossible to obtain a perfect weld on large work. In building up forms of structural shapes, however, it is frequently necessary to weld pieces together, especially in ship construction. Angles, channels, deck beams, and other structural shapes are frequently welded together when making such pieces as frames for bulkhead doors, and other similar parts of ships. This welding is usually effected by first scarfing and fitting the surfaces properly, and then

heating and welding them without a flux. Such a weld will not be as strong as the unwelded portion of the piece, because the heat necessary for making the weld opens the grain of the steel to such an extent as to damage it and somewhat decrease its tensile strength.

28. Forging Press.—Owing to the structure of steel and to the fact that every blow must penetrate to the center of the forging, it is necessary that the blows should have some duration. The steam hammer produces a good surface on the forging but the energy of the blow is not continuous enough to affect the center as thoroughly as it should. This can be remedied somewhat by driving the hammer more slowly, and following the piston with the full steam pressure clear to the end of the stroke. The steam hammer gives very good results on small- and medium-sized forgings.

The hydraulic forging press is better than a steam hammer for forging steel, because it gives a powerful squeeze instead of a sharp blow. It is used for forging very large shafts, armor plate, and similar pieces. Such a press, with the necessary pump and fittings, however, is very expensive, and its use would pay only where a considerable number of large pieces are to be forged. Various types of forging machines have been brought out recently, operated either by steam or by hydraulic pressure, which are used for squeezing steel into the desired shape; they give remarkably good results. Some machines of this class are described in *Machine Forging*.

29. Forging Crank-Shafts.—Whenever it is possible to do so, crank-shafts are forged in pairs, as the two cranks serve to balance each other when the work is turned during the forging. An ingot, or bloom, large enough to make both pieces is used and the finished forgings are separated by cutting them apart on the slotting machine. In Fig. 28, a crank forged in this way is shown. The ordinary crank-shaft should be forged of steel containing from .30 to .35 per cent. carbon. One end of the bloom is first heated, and a

triangular hack is driven, with the steam hammer, into the hot steel at *a*, Fig. 29. The hack should be made of such a height that it can be driven its entire depth without danger of cutting deeper than is required. The end of the shaft from *a* to *b* is then drawn out under the hammer. It is

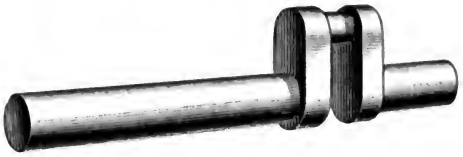

FIG. 28

first drawn square, then octagonal. The hack is next driven into the piece at *c*, and the piece turned over and the hack driven in at *d*. The part between *c* and *d* is then driven over and drawn out, first square, then octagonal, to form the

FIG. 29

part between *c* and *d*, Fig. 30. The piece is next returned to the furnace and the other end heated. It is then taken back to the hammer and the hack driven in at *e*, Fig. 30, and the end *f* drawn down square, then octagonal, and finally

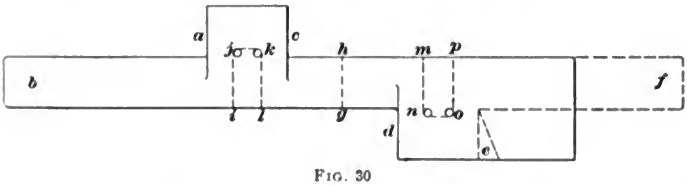

FIG. 30

round; the central portion *c d* is also rounded up. The work is again reversed, the other end heated, and the portion *a b* rounded up. After the forging is cooled, it is sent to the slotter and cut off on the line *g h*. The inside portions of the cranks, at *i j k l* and *m n o p*, are not forged

out, but are left in the forging as solid blocks. They are then removed by drilling holes and slotting out the main portion of the metal in the machine shop.

Where only a single crank is to be made, it is necessary to attach a balance weight to the work or to the tongs. Large steel forgings cannot be handled with the porter bar, as can iron forgings, because it is not possible to weld the shaft to the bar. The shaft is usually gripped with a pair of special tongs or clamps having a long bar or handle that takes the place of the porter bar. In some cases, a long beam of hardwood is attached to the end of the clamps, and the stocks attached to this.

30. Forging a Connecting-Rod.—Whenever it is possible to do so, it is best to forge connecting-rods in pairs, with their larger ends connected. This makes it possible to use one of the connecting-rods as a porter bar or handle for holding the other during the forging; also the large ends adjoining each other can be forged at the same time under the hammer, and both ends can be forged in approximately the time it would take to forge one. Two rods joined in this way are shown in Fig. 31. After the forgings are

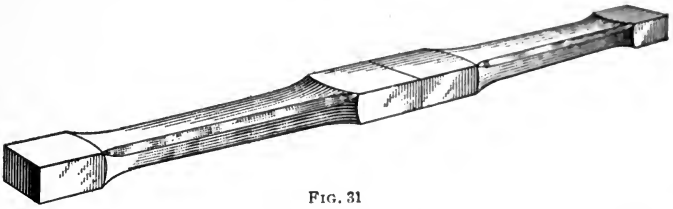

FIG. 31

completed they are cut apart at *a* in the machine shop. The rods from which this sketch was made were each about 14 feet long, and the large end of each rod about 12 inches by 24 inches, and the small end about 12 inches by 20 inches. The work of forging was done under a 12-ton hammer. The method of forging two pieces together and then cutting them apart is one that can be applied to advantage to a very large variety of work. It will effect a saving, first, in the time necessary for heating, second, in the time necessary for

forging the adjacent parts, third, by facilitating the handling of the work by giving balance to work that is heavier on one side, and fourth, by reducing the amount of stock wasted.

31. Hollow Forging.—Hollow shafting is being used very extensively for main shafts of large engines where lightness and strength are desired. The advantages of a hollow shaft are that it is considerably stronger and stiffer than a solid shaft containing the same amount of metal. Shafts made in this manner possess another advantage, as the impurities that tend to collect at the center of the ingot, making the steel weaker and poorer, are removed and only the best part of the ingot remains in the shaft. The first hollow shafts were made by boring out the finished forging. In order to make a hollow forging in this way, it is necessary to have a forging hammer or press that will affect the metal clear through.

Forgings having holes larger than 9 inches in diameter can be made as follows: After the ingot has been cast, the upper or crop end with its impurities is cut off; a hole is then bored through the center of the ingot which removes any piping, together with the impurities that have collected at the center. After the hole has been bored, the ingot is heated, and when at the proper temperature is taken from the furnace and a water-cooled mandrel is forced into the hole. The piece is then placed under a hammer or forging press, and drawn out or worked down to the required size. The result is very much as though an anvil had been introduced into the center of the work. A given pressure from the forging press will produce more than twice the effect that it would on a solid ingot of the same diameter, as it will only have to act on the two relatively thin portions above and below the mandrel. In forging a hollow shaft, one of the forging press dies is usually V-shaped and the other flat, so that at each stroke of the press the steel is worked at three points about the mandrel.

Of course, hollow forgings can only be made in shops equipped for the heaviest work, and the process of making

them is expensive. For many classes of work, however, it has been found cheaper to pay the price for a high-grade hollow forging than to use a solid forging. The strength of a hollow forging is greater than that of a solid forging of the same weight, and hence a smaller weight of material will be required for a forging of the same strength. Another advantage in forging large shafts hollow, is that large solid forgings cannot be successfully oil-treated, but when the center of the work has been removed, it can be treated very successfully.

WELDING STEEL TO IRON

32. In welding steel to wrought iron, the characteristics of both must be considered. Iron welds at a white heat, but steel must not be raised above a bright red heat. Sand is ordinarily used as a flux in welding iron, but if any flux at all is required in welding steel it must be more fusible, and hence calcined borax is very largely used. Ordinary borax will bubble when heated, due to the escape of the contained water, but if borax is placed in an iron pot and melted, the water will be expelled, and the cooled material can be powdered and used as a flux. This is called calcined borax, and sometimes borax glass.

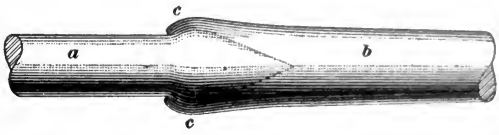

FIG. 32

In welding steel to iron, the pieces must be heated in a clean fire and the temperature raised slowly to the welding heat. A cleft weld is to be preferred; the steel being on the inside as shown at *a*, Fig. 32, and the iron on the outside. The cleft in the piece of iron *b* should be long enough so that the ends can be closed down over the outside portion of the steel piece, as shown at *c*. This serves to hold the pieces together while they are being welded. The pieces are each

brought to the proper heat, that is, the iron to a white heat and the steel to a bright red, the borax flux applied to the steel, and the steel driven into the cleft of the iron, after which the edges *c*, *c* are turned down and the weld then completed.

FORGING HIGH-CARBON STEEL

33. In forging high-carbon steel, the following facts should be kept in mind: The purity of the steel depends very largely on the process of manufacture. The purer the steel, the easier it can be forged; the bad effects of such elements as sulphur and phosphorus are reduced to the least possible amount in the purer steel because only very small percentages of these elements are present. High-carbon steel has a much greater strength in tension than low-carbon steel, and necessarily is much less ductile. Very large forgings are rarely, if ever, made from high-carbon steel, but in all forging operations it will be found that the high-carbon steel has a much harder structure, both when cold and when hot; more care must be taken in heating it, and a piece of given thickness will require a much heavier hammer, for good results, in forging than is the case with a softer steel.

MACHINE FORGING

THE WORKING OF METALS BY MACHINE

1. Definition and Scope of Machine Forging.—In its broadest sense, **machine forging** is the working of metal, either hot or cold, by means of a machine, causing it to flow in such a way as to give it some desired shape, either by slowly applied pressure or by blows. It is impossible to exclude from this machine process of working metals, any forming operations on cold metals, as it has been found advantageous to work metals at temperatures varying from ordinary atmospheric temperature to about 2,000° F. Low-carbon steel, certain brass alloys, and aluminum are frequently pressed, rolled, or punched cold. Zinc is most easily worked at a temperature of between 300° and 400° F. Aluminum can be drop-forged at a temperature slightly below a dull red heat, but it is very difficult to maintain it at exactly the required temperature. Copper can be forged hot, and pure annealed copper can be formed cold by pressing. From this it will be seen that machine forging operations are exceedingly varied in their nature.

2. Classification of Forging Machines.—Forging machines may be divided into three general classes: *rolls*, *drop hammers*, and *presses*. Power and steam hammers are sometimes used with dies for machine forging, but not as extensively as drop hammers.

Copyrighted by International Textbook Company. Entered at Stationers' Hall, London

ROLLING OPERATIONS

3. Rolling Bars.—Wrought iron leaves the puddling furnace in the form of a ball, from which the slag is forced by the squeezer to form the *bloom*. To reduce this bloom to the desired form and size, it is passed through successive grooves in rolls. A train, or set, of *three high rolls* is shown in Fig. 1. Power is furnished to the machine by connecting shaft *a* directly to some source of power, usually an engine or a motor; this drives the middle roll *e*; the top and the bottom rolls are driven from the same shaft by gearing located between the housings *b* and *c*.

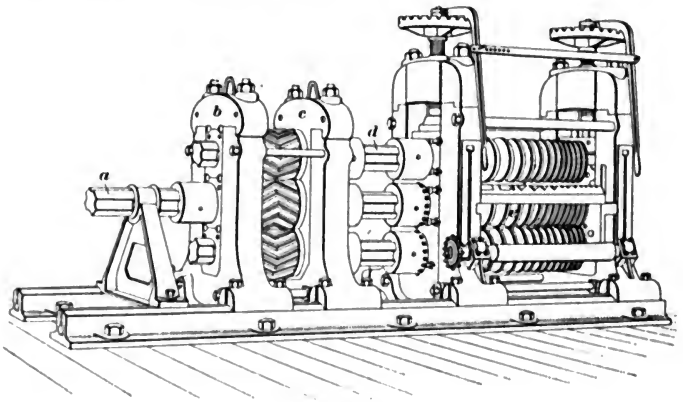

FIG. 1

As the rolls must be connected to the gears by a somewhat flexible arrangement, a special form of universal coupling, known as a **wabbler**, is used; the fluted shafts on the ends of the rolls are known as **wabbler heads**. This coupling *d* is made by fitting a sleeve over the ends of the two fluted shafts that are to be connected and fastening it so as to allow the necessary play. In rolling the stock it is first passed through the first groove between the middle and bottom rolls. As the middle roll always turns in one direction, the top and bottom rolls always turn in the opposite. After the work is passed through the first groove between

the middle and bottom rolls, it is returned through the first groove between the middle and top rolls. In the case of very heavy work, an automatically operated carriage is used to raise the end of the bar for its upper pass. After the bar has passed through and back again, it is sent through the second groove between the middle and bottom rolls, returned through the corresponding groove in the upper rolls, and so on until it is reduced to the proper size and form.

The bloom as it comes from the squeezer is approximately round, as shown in Fig. 2 (*a*). In rolling a round bar, it is somewhat oval after the first pass through the rolls, as shown in Fig. 2 (*b*). When it is returned to the rolls, guides that act against the ends *a*, *b*, turn the rod so that it enters the rolls with the long diameter *a*, *b*, vertical, as indicated by

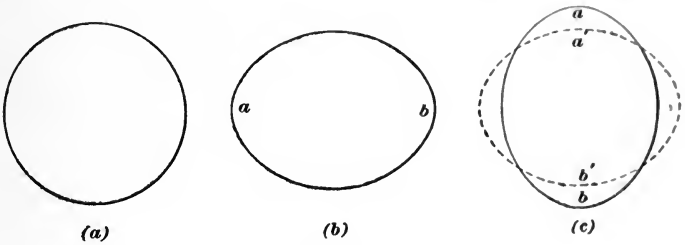

FIG. 2

the full lines in Fig. 2 (*c*), and leaves them squeezed down with the short diameter *a'*, *b'* vertical, as indicated by the dotted lines. Each succeeding pass produces a smaller oval, until the last pass, for which the grooves are so arranged that the bar comes out round. If it were not for this method of rolling down successive ovals, it would be difficult or impossible to gradually reduce the cross-section of the bar, and at the same time insure an even working of all parts of the metal.

Square, rectangular, and structural shapes, such as I beams, angle iron, channels, etc., that are used in buildings, bridges, and other structures, are made with rolls having suitably shaped grooves. In many cases, however, the metal is worked down from the ingot or bloom to approximately the

required area with a square cross-section, and then passed through a series of forming rolls that gradually bring it to the proper shape. This preliminary square rolling insures the proper working of all parts of the metal before it receives its final forming.

4. Rolling Plates.—For rolling plates of steel or other metals, or for rolling down ingots of such metals as gold, silver, German silver, etc., plain cylindrical rolls like those shown in Fig. 3 are used. In this case, the roll faces *a*, *a*

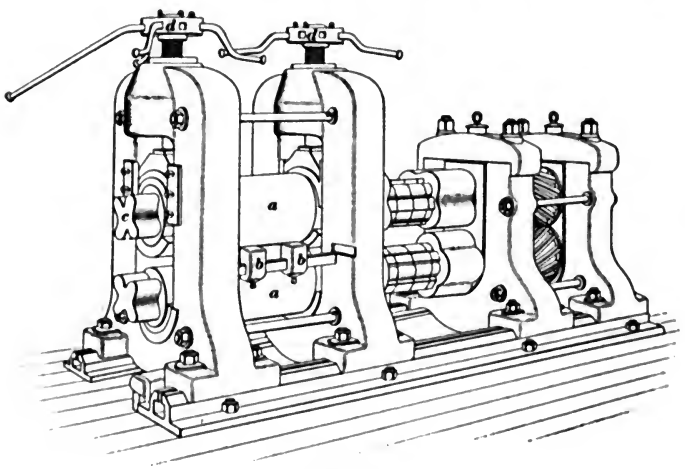

FIG. 3

are parallel, and the ingot is passed between the guides *b*, *b*. After the ingot has been passed between the rolls, it is returned over the top. In some cases, especially when handling large plates, the rolls are made so that their direction of rotation can be reversed, and after the piece has passed between them it is returned by reversing the motion; this is accomplished either by suitable clutches or by reversing the motor. In Fig. 3, the wabbler heads on the rolls are shown at *c*. The screws *d*, *d* are provided for adjusting the distance between the rolls. In rolling most metals cold, it is necessary to anneal the metal occasionally, sometimes after

only a few passes between the rolls. When the metal begins to crack at the edges, it is generally considered to have reached a point where it is necessary for it to be annealed.

5. Graded Rolling.—Special rolls are frequently used for producing work of varying thickness; this is really forging with revolving dies, and is called **graded rolling.** Usually, graded rolling is accomplished by passing a piece of metal lengthwise between a pair of rolls, one or both of which are more or less eccentric or have dies attached, so as to give the finished piece a tapered form or a varying thickness. Silver, German silver, and brass may be rolled cold; but iron and steel are usually rolled hot. In some cases, the stock is simply passed through the rolls, that is, the piece is placed against a guide, which serves to locate it properly before starting through the rolls; the rolls then grip it and carry it from the operator, requiring no further attention from him. In other cases, the rolls are provided with dies, and revolve so as to draw the work toward the operator; the dies on the surface of the rolls are cut away for a portion of their circumference, so as to leave a wide space between the rolls once in every revolution. The rolls turn continuously, and when the wide space appears the operator quickly passes the work between them. As the rolls turn, the dies come together, grip the work, and roll it forwards toward the operator. The advantage of using a machine in which the work is done by rolling the material toward the operator is that where several passes are required all work can be done by one man, while with rolls carrying the work away from the operator it is necessary to have a man at the back of the machine to return the partially worked pieces. Graded rolling is sometimes done to break down stock or rough it to shape, so that it may be finished by drop forging.

6. Example of Rolling With Dies.—Some of the operations in the making of spoons furnish an excellent illustration of graded rolling with dies. The blanks are punched from a sheet $\frac{1}{4}$ inch thick, in the form shown in

Fig. 4; the piece *a* is waste, and *b*, *c*, *d*, *e*, *f*, and *g* are spoon blanks. The large end of the spoon blank, which is to form the bowl, is first made wider by cross-rolling; this is done in some cases by passing the blank sidewise between rolls about 6 or 8 inches in diameter, the rolls being located between housings, as shown in Fig. 5. A part of each roll is made smaller in diameter, that is, it is cut away so as to clear the spoon handle, shown at *b*. The portions *r r* of the rolls do the cross-rolling; the rolls are connected by suitable gears, which are placed on the ends of the roll shafts. In other cases, the cross-rolling is done between overhanging rolls, as shown in Fig. 6; these rolls are 10 or 12 inches in diameter, to insure the necessary stiffness. The portion of the rolls between the housings are frequently used for other work. Driving gears are located on the ends of the roll shafts at the side *g*.

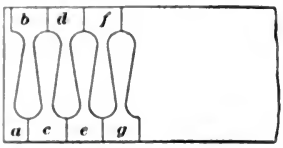

Fig. 4

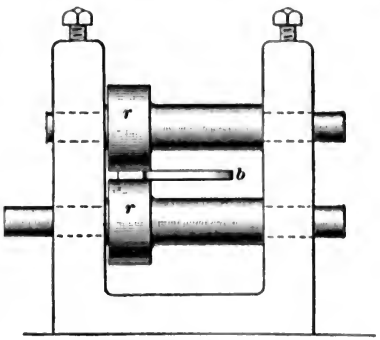

Fig. 5

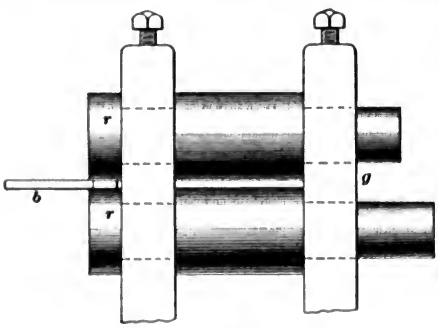

Fig. 6

After the bowl of the spoon is cross-rolled, both the bowl and the handle are lengthened by graded rolling. The graded rolls for this class of work are made with a portion of their surface cut away, so that the piece may be placed through, and against a stop,

before the rolls grip it. The rolls must be so designed that they will operate only on the portion of the work for which they are intended. In other words, each style of bowl and each style of handle requires different rolls. The handles for forks are also rolled in this manner. In most cases, the work is passed through the rolls away from the operator and allowed to fall out on the other side.

7. Rolling Rifle Barrels.—Rifle barrels made of nickel steel are rolled from billets that are heated in a furnace and

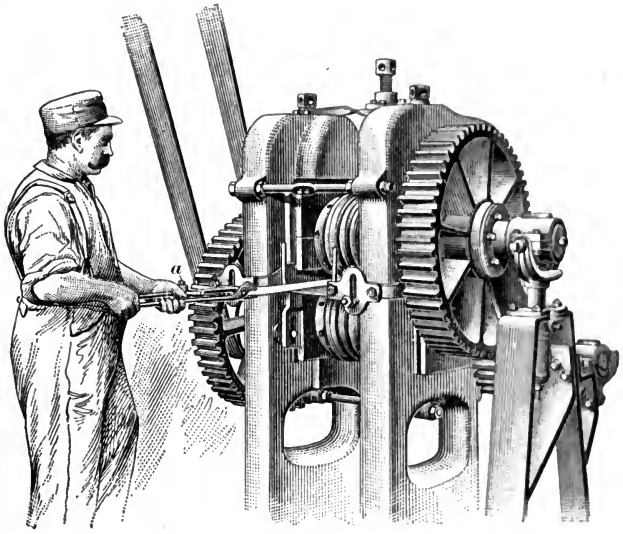

FIG. 7

then passed through successive grooves in a pair of special eccentric or graded rolls, until the barrel is reduced to the proper size and has the required taper. As the billet passes through the first groove, it is seized by a man at the back and passed over to a man in front. The work passes between the rolls with the large end first, passing once through each groove, except the last, through which it is passed twice; the work is given a quarter turn between each

two passes. As soon as the barrel is rolled to size, it is made the proper length by sawing off the ends.

8. Special Graded Rolling.—A pair of graded rolls fitted with dies for special forging work, on either hot or cold metal, is shown in Fig. 7. These rolls are provided with nuts and collars, between which the rolling dies are clamped. The dies can be removed and changed at will, so that a large variety of work can be done on one pair of rolls. The rolls turn so that the work is run toward the operator, and, as the dies do not extend over the entire circumference of the rolls, the metal is passed between them at the time in the revolution when the dies are out of the way. The work is located by guides, which control its position both vertically and horizontally. When rolling hot metals, the location is determined by a stop *a* on the tongs, Figs. 7 and 8. It will be noticed that this is simply a clamp screwed to the tongs; it

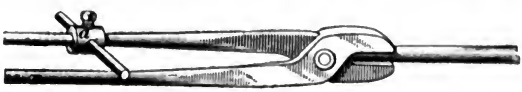

FIG. 8

is brought against a guide fastened to the front of the rolls, to show how far the iron should be pushed in between the rolls. Sometimes the end of the tongs strikes the guide, and this serves to locate the work. After the work has been placed in position, the revolving dies catch the piece and roll it toward the operator. As soon as the dies leave the piece, the operator puts it in position for a second pass through the rolls, either giving it a quarter turn and returning it through the same groove, or giving it a quarter turn and placing it in the next groove; in this way the work is continued until completed. In the machine shown in the illustration, there are three grooves, and the work is given two passes in the first groove, two in the second, and three in the third groove.

In Fig. 9 is shown the back of the machine shown in Fig. 7. In this view, the dies *a*, *a* are clamped between the nuts *b*, *b* and the collars *c*, *c* on the other ends of the rolls. The work *d* is shown in position ready for the dies to grip it

as they come around to the proper point; the arrows show the direction in which the rolls are turning. A peculiar arrangement of gearing is used for driving these rolls, which admits of the adjustment of the distances between the rolls; this is accomplished by driving the top roll by a train of

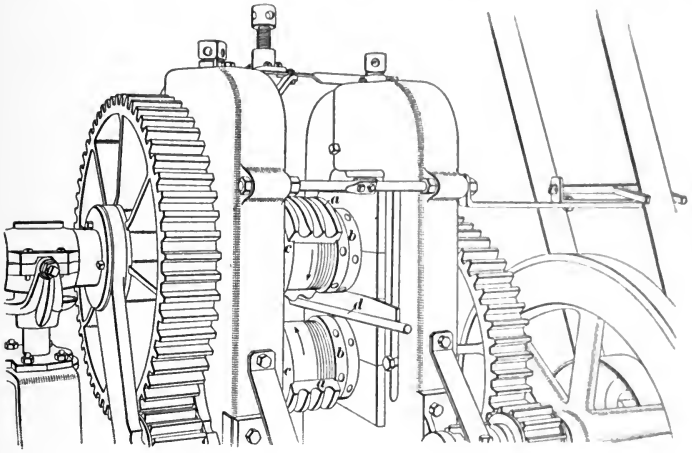

FIG. 9

three gears, one being an idler swinging about one of the others and meshing with both.

9. Screw-Thread Rolling.—The threads on wood screws, track bolts, machine screws, and many other screws and bolts, from small sizes up to $1\frac{1}{2}$ inches in diameter, are frequently rolled on the cold rod stock or on headed blanks. The thread is formed by rolling the stock between suitable dies, with sufficient pressure to force the material out of the grooves to form the thread points. That is, the cold metal is caused, by the pressure on the dies, to flow from the bottom of the spaces and form the full thread. It is in reality a cold-forging process.

Fig. 10 shows how the metal is displaced by the dies to form the thread on the bolt *a*; the dotted line *bc* shows how deep the dies press into the stock, and also how the diameter

is increased on account of the thread. As the finished thread must have a definite diameter, it is very important that the stock used should be of the right size; if the stock is large the screw will be too large, and if too small the screw will either be too small or the threads will not be perfect.

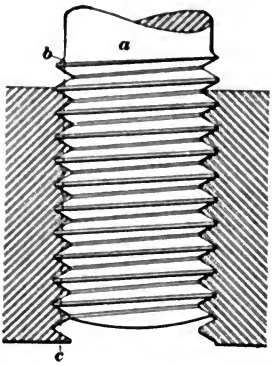

FIG. 10

In the screw-thread rolling machine, the dies are placed as shown in Fig. 11, with the moving die at *a* and the stationary die at *b*; both dies are clamped in place with their cutting faces vertical. At *c* is shown a blank just about to be started between the dies by the pusher *d*, which is operated so as to start the blank into the dies when the moving die has reached the right point in its stroke. The stationary die is held in place in the machine frame, while the moving die is attached to a head that slides back and

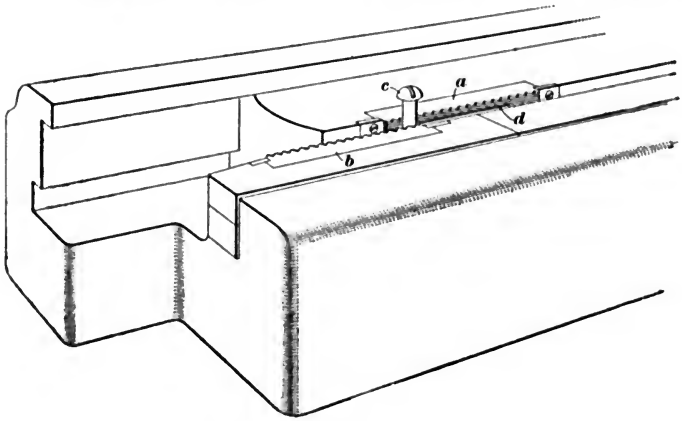

FIG. 11

forth past the stationary die, and is operated by a crank on a shaft that receives its power from a belt. The moving

head slides between guides that keep the dies at the proper distance apart. The bolt or screw blank is placed between the dies in a vertical position and is held during the threading process by the pressure of the dies. In forming the thread, the blank rolls from one end of the stationary die to the other and then drops out of the machine with a finished thread.

The threads on the dies are laid off at an angle as shown in Fig. 12, which is a die for forming a right-hand thread.

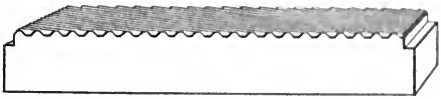

FIG. 12

The length of the die is about three or four times the circumference of the blank so that the screw will turn around, between the dies, about that number of times in forming the thread.

Screw threads are rolled on many other small pieces, the material being either hot or cold, depending on the size and character of the article. The rolled thread is claimed to be much stronger than a cut thread, but it is exceedingly difficult to keep dies in shape for rolling threads on hot stock; hence, this process is used mostly for rolling articles cold, and having no sharp corners in their cross-section.

10. Bending Rolls.—In shops where large curved work is made, a set of **bending rolls** is necessary. It consists of three rolls so arranged that one of them can be pressed down between the other two. A plate of metal passed through these rolls will be forced into cylindrical shape by the action of the central roll on the other two. Such rolls are also frequently arranged

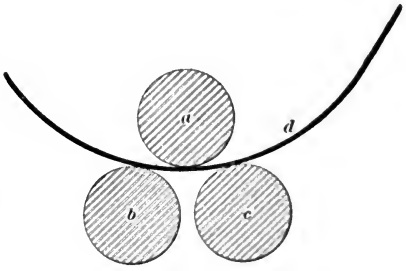

FIG. 13

for bending angles, or other structural shapes. Fig. 13 shows a section through a set of bending rolls for bending plates into cylindrical form.

The roll *a*, called the *bending roll*, is usually driven by a belt and pulley, or by gears; the rolls *b* and *c*, called the *pinching rolls*, may be geared to the roll *a*. At *d* is shown a section of the plate being rolled. The rolls are adjustable so that cylinders of different diameters may be rolled; sometimes the ends of the rolls may be adjusted separately, so that conical pieces can be rolled.

DROP FORGING

DROP HAMMERS AND PRESSES

11. Board Drop Hammer.—A drop hammer is any hammer in which the striking die is fitted in the face of a hammer head working between guides, and so arranged that it can be raised and then allowed to fall. One of the most common forms of drop hammer is known as the **board drop hammer**, one form of which is illustrated in Fig. 14.

The hammer head *a* and board *b*, to which it is attached, rise and fall together. Friction rolls on each side of the board are attached to shafts carrying pulleys *d*, *d* turning in opposite directions and run by belts in the directions shown by the arrows. The friction rolls are thus run continuously in the directions required to raise the board, but in their normal position they just clear the board. The rod *e* operates a cam that moves the roller *c* toward the other roller and grips the board so as to raise it and the hammer. The lever *f* is connected by a strap *g* to the foot treadle *h*, which is also attached to the rod *i*, and thus operates the latch *j*.

When not in use, the hammer head is usually held up by the latch *j*, which is placed at about the highest point from which it is desired to have the hammer drop. When it is desired to strike a blow, the treadle is depressed, pulling out the latch *j*, holding up the rod *e* and keeping the rollers apart,

thus permitting the hammer to fall. The treadle is then released, and springs pull it up, allowing the rod *e* to fall, clamp the rollers together on the board, and raise it. If it is not desired to strike another blow, the hammer strikes the dog *k* as it rises, raising the rod *e*, releasing the board from the rolls and allowing the weight to drop to the latch *j*, where it remains suspended. Light and heavy blows can thus be struck with this hammer by releasing the board at the desired point.

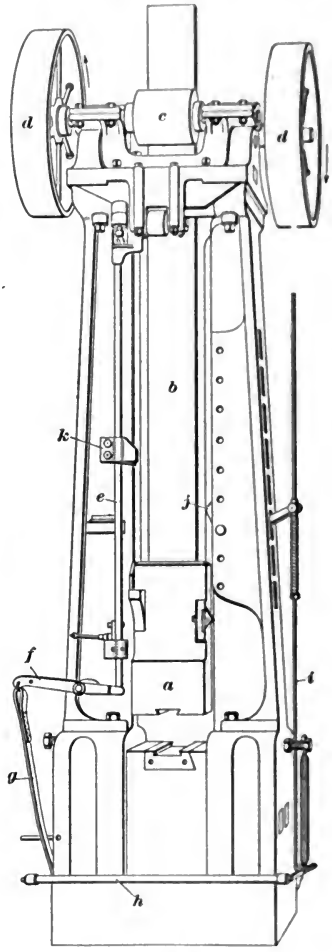

FIG. 14

12. Crank Drop Hammer.—A very common form of **crank drop hammer** is shown in Fig. 15. In this type of hammer, the lifting mechanism is arranged in such a manner as to rotate the crank *a*, thus lifting the hammer head *b* by means of the ropes *c*, or by a leather strap. The mechanism is driven by a belt on the pulley *d*, on the shaft carrying the pinion *h* that drives the gear *i*. A clutch *e* is so constructed as to raise the hammer after each stroke and hold it in its highest position until the treadle *f* is depressed. The treadle *f* is connected through the rod *g*, to the clutch *e*. By leaving the treadle depressed, the hammer will strike successive blows.

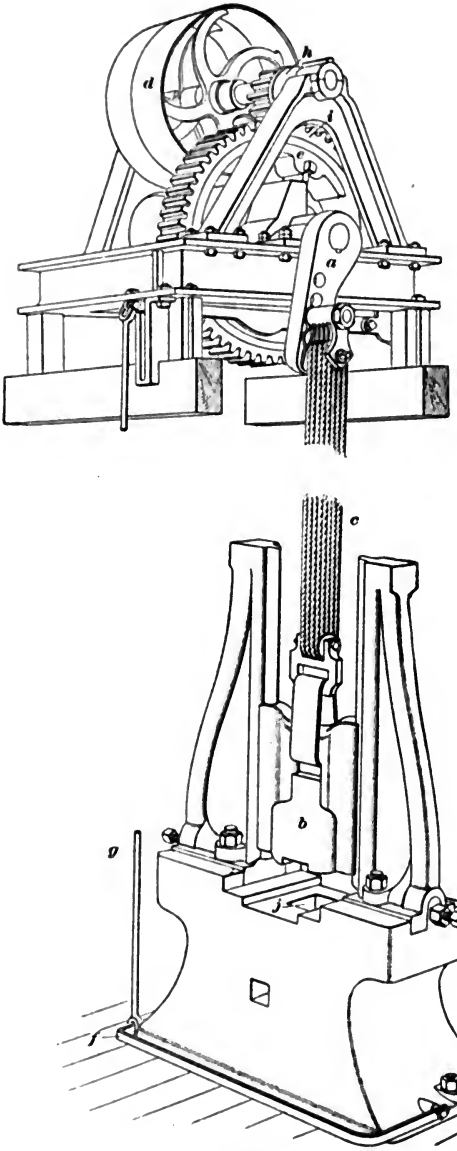

FIG. 15

13. Comparison of Board and Crank Drop Hammers.—Board and crank drop hammers have a number of points that distinguish them from each other. In general, a board drop hammer strikes a quicker or sharper blow for the same weight of hammer head and same height of drop. The blow of the board drop hammer may also be quickly regulated by varying the height of the drop.

The *crank-lift*, *rope-lift*, or *strap-lift* drop hammer, as it is variously known, is largely used for bending, shaping, straightening, and welding. These hammers are used very extensively by the manufacturers of agricultural implements, and also by malleable-iron companies. The crank machines have an advantage in the lifting arrangement because the board drop hammer depends on friction for lifting the hammer, while with the crank drop hammer, the lifting is positive. The board and gearing are expensive, so that a crank machine of a given capacity and weight of drop will cost less than a board-operated machine. The advantage of the lifting device is not of much importance in the case of light work, but for manufacturing where large forming dies are used, it is a point well worth considering. As a rule, the crank machine is simpler and requires less skill for its operation; hence, it is preferred for rough work. It is also used very extensively for forging soft metals cold, as in making spoons, watch cases, and similar work.

In many classes of work, it is absolutely necessary that the hammer head or drop should fall from two or more heights, in order to strike light or heavy blows when forging; and sometimes, as the work is turned from side to side, these light and heavy blows must alternate. For such work the crank hammer is not suitable, and it is necessary to use a board drop hammer. In fact, for the general run of light forging, especially where the dies are frequently changed, the board drop hammer is generally considered the better.

14. Strap and Pulley Drop Press.—In the press shown in Fig. 16 the weight is lifted by pulling on a strap

that passes over a constantly rotating pulley; this is known as a **strap and pulley drop press.** The pulley *b* is kept rotating constantly by a belt on the pulley *d*, and when the end of the strap *e* is hanging loose the friction on the pulley is not sufficient to lift the weight. When the operator brings pressure on the strap, either by pushing his foot down in the stirrup at *c* or by gripping the strap higher up with his hand and pulling down, the friction of the strap on the pulley *b* is increased to such an extent that the hammer head is lifted. When the head reaches the desired elevation the tension on the strap is relieved, allowing it to slip over the face of the pulley as the head falls.

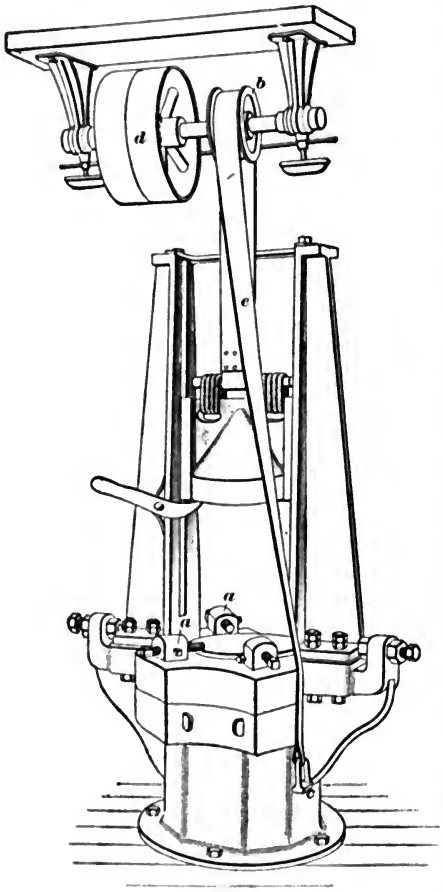

FIG. 16

The poppets, shown at *a*, *a*, are used for the purpose of holding the lower die in place on the base. They are made with long shanks that fit holes in the base of the press, and with adjusting screws through the upper parts for locating and holding the die.

15. Steam Drop Hammer.—The steam drop hammer is illustrated in *Hammer Work*. It is usually much more expensive to install than the board or crank drop hammer; it, however, possesses many of the advantages of the board drop hammer, especially the advantage of the variable blow, due to the provision for changing the height of the drop. The steam drop hammer, however, has one special

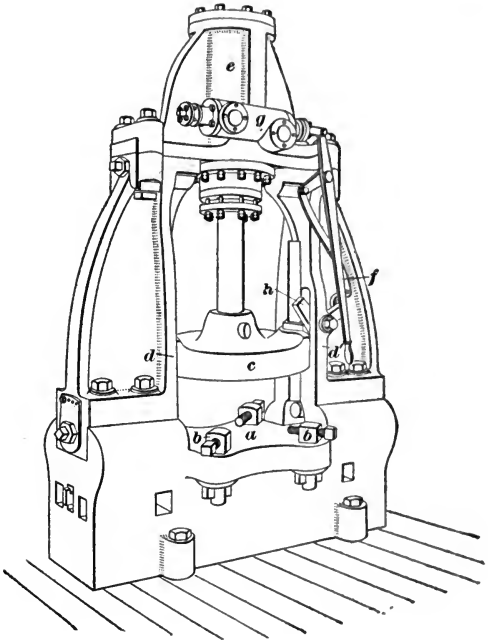

FIG. 17

advantage that is not shared by either of the others, and that is, that steam may be used for driving the piston down more rapidly, and hence an exceedingly quick and powerful blow can be struck; also, the piston may be let down slowly until the upper die comes in contact with the work, when the steam pressure is suddenly applied and the dies forced together with a slow uniform pressure, as in the case of an

ordinary power press. The work may then be finished by one or two blows of the hammer; in other words, the steam drop hammer is capable of a wider range of work than either of the others, but as a rule it requires a somewhat higher degree of skill in the operator.

16. Steam Drop Press.—There is a large variety of work that must be pressed to bring it approximately to shape, and then a few sharp blows from a hammer must be struck to finish it. The **steam drop press**, which closely resembles the steam drop hammer, has been brought out to meet this demand. One form of drop press is shown in Fig. 17. The lower die is held in place on the base *a* by the poppets *b*, which extend through the base and are secured by keys below. The head *c* that carries the upper die, and moves between the guides *d*, *d'*, may be allowed to fall by gravity or may be forced down by steam or air pressure acting on a piston in the cylinder *e*. The lever *f* operates the piston valve in the valve chest *g*, and also moves the latch *h* out of the way when starting the head from its highest position, where it is held by the latch when the press is not running. This type of press is used for large thin work, such as dish pans, where the work is first pressed into shape and then finished by two or three quick blows.

DROP-HAMMER DIES

17. Materials Used for Drop-Hammer Dies.—In places where only a few forgings are produced, the dies are frequently made from a close-grained cast iron, the faces being cast to approximately the correct form and finished with a file or a scraper. Large forming dies have been cast so perfect that practically no finish was required. Cast-iron dies are sometimes made with chilled faces to increase their hardness and wearing qualities. Ordinary dies for making large quantities of duplicate work are made from steel, both steel castings and steel forgings being very largely used. In most cases these are cast or forged smooth on the face,

and the desired forms cut in them by milling, routing, chipping, and scraping. In cases where a very large amount of work is to be done, one or both of the dies are hardened by heating them to a cherry red heat and immersing them in a bath of water or brine. These dies must afterwards be tempered to make them less brittle and relieve the internal stresses.

18. Drop-Hammer Die Fastenings.—The manner of fastening drop-hammer dies depends somewhat on the character of the work being done. For heavy forging operations the dies are usually fastened with two keys, one on each side of a dovetail or feather on the back of the die. Sometimes two slightly tapered keys having straight sides are driven from opposite directions, but on the same side of the die, so as to clamp the die with an even parallel bearing on both sides. Crimped steel keys are also driven on both sides of the die and bearing at a series of points; they act as powerful springs, and insure a large number of contact points, while if the die is slightly out of shape, as is usually the case after it has been used some time, a straight key can bear at but one point. For light work, with forming dies operating on thin metal, either hot or cold, the lower die is usually held by means of poppets. The use of these poppets permits considerable adjustment of the die; but they would not be strong enough to hold the dies in place for heavy forging. In the hammer shown in Fig. 17, the lower die is supported on the flat plate or anvil, and is held in place by the poppets only. In the hammer shown in Fig. 15, a pocket *j* is formed in the anvil face, so that a suitable projection on the die may fit into this pocket and thus aid in keeping it in its proper position.

19. Form of Drop-Hammer Dies.—The form of a pair of drop-hammer dies depends on a number of important factors. If the work being forged is of circular cross-section, and so formed in relation to its axis that the piece can be revolved, as, for instance, the handle shown in Fig. 18 (*a*), the forging dies will be made as shown by the cross-section

in Fig. 18 (*b*). The form in both dies corresponds to the form to be given to the work, but the corners *a* are rounded, instead of being sharp like the corners *c*, *d*, so as not to scar the work. By rotating the work as it is being forged, it will finally be brought to the desired circular cross-section, as

FIG. 18

indicated by the dotted circle at *b*, and there need be no fin or burr on the finished forging.

In the case of work that is not round in cross-section, or which does not have a straight axis, it is impossible to turn the piece in the die, and hence, it must be forged to shape without rotation. Dies are made that can be used for a series of impressions or operations, some parts of the dies acting on the edges, and others on the faces of the work. The finishing die always squeezes out a fin on the edge of the work, as shown in Fig. 19 (*a*). The fin formed on drop-forged work is known as the **flash**, and provision is usually made for it by a groove in the die, as shown at *a*, Fig. 19 (*b*).

In laying out drop-hammer dies, great care must be taken to see that the operation performed in each of the successive

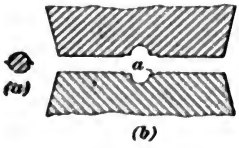

FIG. 19

FIG. 20

stages leaves sufficient stock for the finishing operations. The volume of the successive dies is frequently checked by placing each pair of dies face to face and using them as molds for making lead casts of the spaces between them. By measuring these lead casts and comparing their weights,

a very good idea of the volume of the successive openings or spaces between the dies can be ascertained.

20. Example of Drop-Hammer Die Work.—The process of drop forging is illustrated by the making of an ordinary open-end wrench, shown in Fig. 20. A bar of suitable size to form the piece is selected and a portion broken down under a power hammer, or between suitable drop-for-

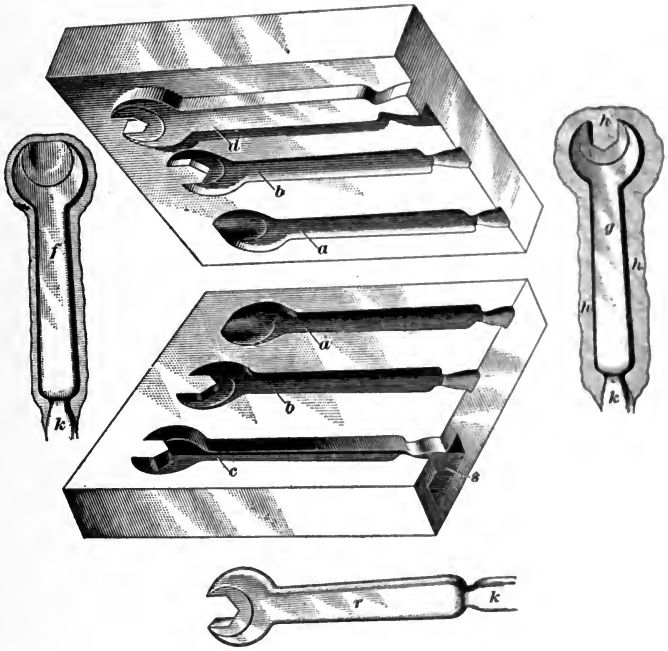

FIG. 21

ging dies, so as to leave sufficient material for the head, while the handle is narrowed somewhat. The dies for doing the work are shown in Fig. 21. The piece is first placed in the die opening *a*, which will form it as shown at *f*, the end of the die acting as a fuller to spread the stock for the head. The work in all cases is held by the projecting end *k*. After the piece has been struck one or two blows in the

opening *a*, it is placed in the opening *b*, and struck several successive blows. This brings the entire wrench to the finished form, except for the flash shown at *h* in the piece at the right of the dies, the wrench being shown at *g*. The piece is now placed in the cutting-out die *c* and struck by the punch *d*. This drives the wrench into the space *s*, from which it is removed endwise, leaving the flash on the top of the die block. The end *k* is then cut off by a suitable pair of shears, which completes the forging.

21. As a rule, small work having a circular cross-section is forged under a drop hammer, although this class of work is also frequently made under a power hammer. The fact that the hammer head of the drop hammer is accurately guided, however, makes it possible to produce more accurate work in the drop hammer than in the ordinary power hammer. Frequently, machine handles of various forms, punches, and similar pieces are forged to finished sizes under the drop hammer with an allowance of only .001 or .002 inch for error. This is accomplished by rotating the work under the hammer and forging until the flat faces of the hammer dies strike each other. In order to produce a good finish, water is thrown on the work during forging and the forging continued until the iron cools to a black heat; the result is a smooth blue-black finish.

DROP-HAMMER FOUNDATIONS

22. Elastic Foundations.—As it takes some appreciable time for the blow to penetrate to the center of a piece of metal, drop hammers are sometimes provided with an elastic foundation. The elasticity has the effect of distributing the force of the blow over a longer period of time, thus causing it to penetrate deeper. Such a foundation is usually made of large timbers, carefully squared and made to fit each other quite accurately, as shown in Fig. 22. The anvil *a* is then placed on the foundation, usually with a layer of leather belting or a rubber pad between the top of the timber and the base of the anvil. The bottom of the timbers *b*

should be bedded in concrete to insure an even bearing. While this style of foundation has been used quite extensively, its great cost and the expense of renewal are factors that tend to bring it into disfavor.

Elastic foundations have been made by placing the timbers for the foundation in a vertical position. A log large enough in diameter to receive the anvil on its top and to enter the ground 6 or 8 feet, is sometimes preferred. The hole is dug 1 foot deeper than is necessary to receive the log. A foot of concrete is then placed in the bottom of the hole, and the log bedded, in a perpendicular position, on top of this. For light drop hammers, a large flat stone is sometimes placed under the bottom of the log. The space about the log in the hole should be filled with earth well tamped into place; the top of the log should be trimmed off to a true horizontal surface. In the case of hammers with openings in the center of the anvil, it is necessary to cut a depression in the center of the top of the log, with a groove leading to the outside to allow scale and dirt to pass off without accumulating under the anvil. When a log large enough for the anvil cannot be obtained, several timbers may be bolted together to form a block of sufficient size. Chestnut or oak timbers are said to be the best for drop-hammer foundations. For hammers with drops weighing 1,000 pounds or more, a masonry foundation is recommended by some builders. A hole is first dug 10 to 14 feet deep, and the masonry built up to within 4 feet of the top. On top of the masonry, oak timbers 4 feet long standing on end are arranged, and bolted closely together.

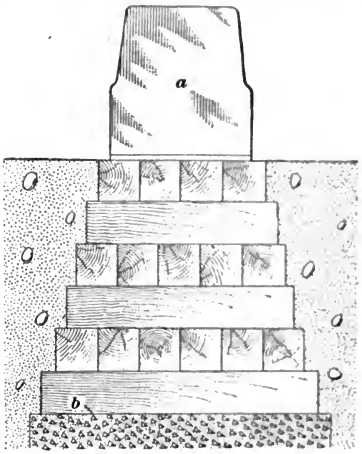

FIG. 22

The space around the timbers is then filled with concrete; the anvil is set on top of the oak timbers, as in the case of the foundations already mentioned. In some cases, masonry foundations are built up to within an inch or so of the anvil, and a thick rubber or leather pad placed under the anvil.

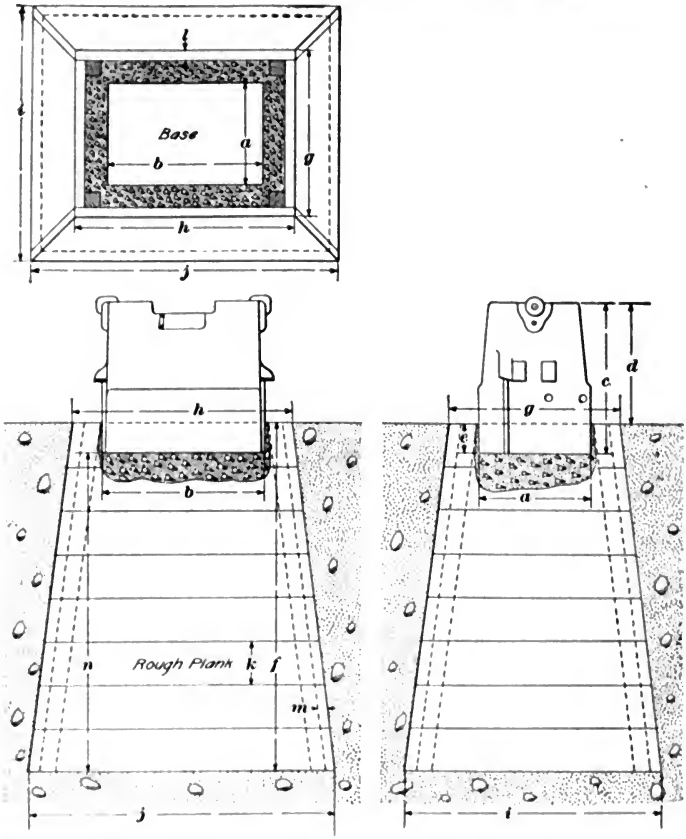

Fig. 23

23. **Solid Foundations.**—One of the leading manufacturers of drop hammers recommends the foundation shown in Fig. 23. It is made by digging a hole of the required depth, and lining it with planks, as shown. The

53B—36

TABLE I

DIMENSIONS FOR DROP-HAMMER FOUNDATIONS

Weight of Hammer Pounds	*a* Inches	*b* Inches	*c* Inches	*d* Inches	*e* Inches	*f* Inches	*g* Inches	*h* Inches	*i* Inches	*j* Inches	*k* Inches	*l* Inches	*m* Inches	*n* Inches
400	29	36	37½	33½	4	96	45	52	69	76	12	2	2	92
500	29	36	37½	33½	4	96	45	52	69	76	12	2	2	92
600	32	43	37½	33½	4	96	48	59	72	83	12	2	2	92
700	32	43	41½	33½	8	96	48	59	72	83	12	2	2	88
800	32	43¼	41½	33½	8	96	48	59¼	72	83¼	12	2	2	88
1,000	32	43½	49	33½	15½	96	48	59½	72	83½	12	2	2	80
1,200	37	43¾	49	33½	15½	96	53	59¼	77	83¾	12	2	2	80
1,600	37	44	66	33½	32½	112½	53	60	77	84	12	2	2	80
1,800	37	44	74	33½	40½	120½	53	60	77	84	12	2	2	80
2,000	42	74	72	33½	38½	122½	58	90	82	114	12	2	2	84
2,500	42	74	72	33½	38½	122½	58	90	82	114	12	2	2	84
3,000	45	74	84	33½	60½	144½	58	90	82	114	12	2	2	84

NOTE.—Dimensions *n* and *f* to be varied according to nature of ground.

space inside of the planks is then filled with concrete. The following proportions for the composition of the concrete are recommended: three barrels of stone, two barrels of gravel, and one barrel of cement. To the water used for mixing the cement, two quarts of sodium silicate are added. Table I shows the dimensions of the foundations for various weights of the drop, generally called the weight of the hammer.

The dimensions for the foundation of any hammer are found in the same horizontal line as the weight; the letters at the head of the columns correspond to those in Fig. 23.

Foundations of this kind have been built without using any elastic material between the anvil and the concrete, with very satisfactory results.

24. Comparison of Drop-Hammer Foundations. It has been found in practice that when the anvils of large hammers are light, it is necessary to use elastic foundations or the force of the blows will cause the foundations to yield. In the case of a large steam hammer installed by the Bethlehem Steel Company, the first foundation, which was made of timber, had very little elasticity. This foundation yielded so that it had to be rebuilt. The second foundation was made very elastic by placing wooden shavings and brush beneath the timbers, and no further trouble was experienced.

If the anvil is made heavy enough, it will not have time to move away from the work before the hammer has exerted its full effect, and hence an elastic foundation would not relieve the shock of the blow. With a relatively light anvil, the spring of an elastic foundation allows the anvil to recede when the blow is delivered, and thus prolongs the action of the blow; but it is only on large work that it is especially desirable to obtain this effect.

It has been found that with a solid foundation of sufficient size for the hammer, as perfect work can be done with a height of drop only about one-half that required with an elastic foundation. The shorter drop also allows the hammer to strike more blows per minute than when operating

with a higher drop. Hence, a greater amount of work can be turned out.

It has been found also that when the solid foundation is used, practically no repairs are necessary, and a much greater number of hours work can be done, per year, by a given hammer. It is an interesting fact that wherever the solid foundations have been adopted, and the height of the drops properly adjusted, their use has not been abandoned.

FORGING PRESS WORK

SHEARS

25. Lever Shears.—For cutting bars to length, and for cutting up scrap, a lever shear of the form shown in Fig. 24 is very useful. The stock is cut off between the shear

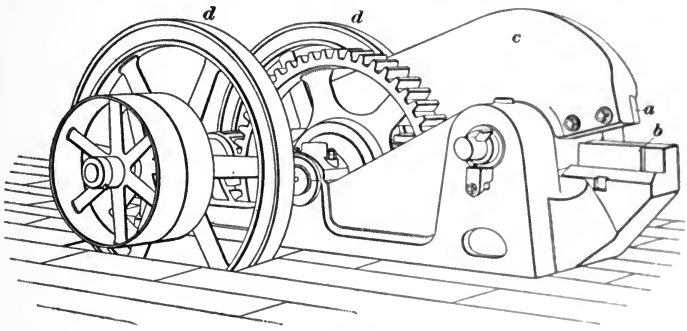

FIG. 24

blades a, b, the lower one of which is stationary and the other is attached to the short end of the lever c, the long end being moved by a crank or cam. In the shear shown, two flywheels d, d are placed on the main driving shaft, so that their inertia will assist in operating the shear and enable it to cut heavier stock; also, the bar will be gripped on one edge first, and the cutting proceed from one side to the other. This enables the shear to cut much larger stock than would be possible if the cutting edges of the blades were to strike both sides of the bar along the entire width.

26. Vertical Shear.—For cutting bars, narrow plates, etc., the shear shown in Fig. 25 is quite frequently used. One advantage of this type is that it takes up less room than the lever shear. The shear blades *a*, *b* are arranged much as in the lever shear, except that the moving blade *b* is attached to a head, or ram, that descends in a straight line

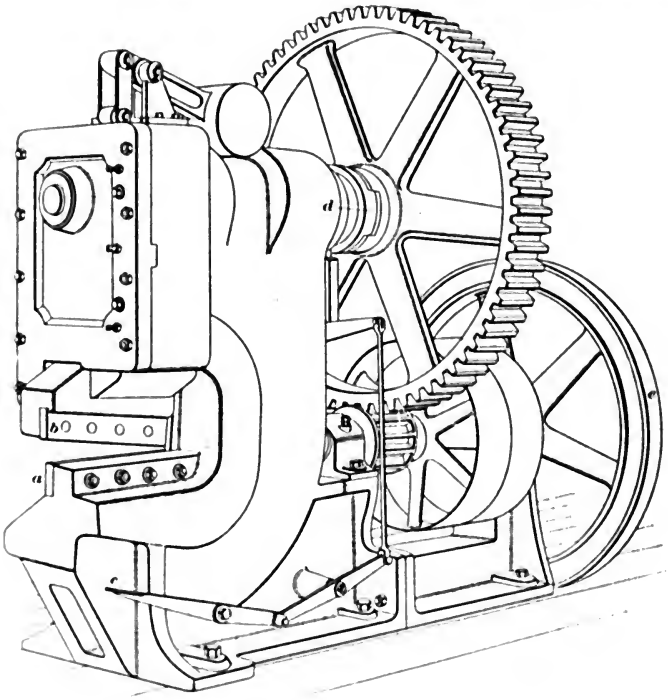

FIG. 25

instead of working about a pivot, as in the lever shear. It will be noticed that the blade *b* is set at an angle to the blade *a*, so as to cause the cutting to proceed from one side to the other. This is known as giving **shear** to the blades.

The operating parts are so arranged that when the treadle *c* is released, the head with the blade *b* always returns to the

top of the stroke and remains in that position while the shear is out of use. The pressure of the foot on the treadle *c* throws in the clutch *d*, connecting the head with the driving mechanism and causing the shear to descend and continue to operate until the treadle is released. This shear is also provided with a flywheel *e*, to increase the effectiveness of the machine by storing up energy between cuts and giving it up to the shear when cutting. Sometimes the shear blades *a*, *b* are turned at right angles to the position shown in Fig. 25. This is usually done with shears intended for trimming the edges of wide plates. Special shears are also made for cutting off angles and other structural or rolled shapes.

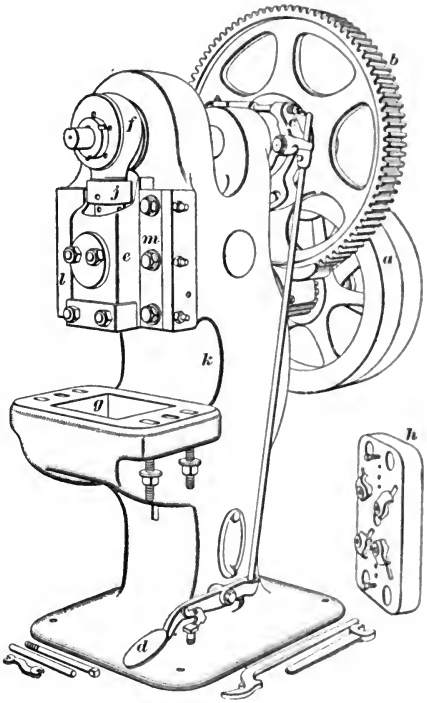

FIG. 26

PRESSES AND PUNCHES

27. Vertical Press or Punch. Vertical presses or punches are used either for forming or shaping metal, or for punching holes or openings in metal that is usually worked cold. One common form of press, shown in Fig. 26, is driven by a belt on pulley *a*, which drives the gear *b* continuously. By depressing the treadle *d*, the clutch *c* is thrown into action and the head *e* is driven down by the eccentric *f*. The upper die is attached

to the lower face of the head *e*, and the lower die is carried on a block *h* that fits over the opening *g*. In order to adjust properly the height of the dies to suit the work, an adjusting nut is provided at *j*. The design of many parts of this press varies with the use to which it is to be put. In some cases it is not necessary to have the large opening shown at *g*; this is especially true in the case of machines used for punching rivet holes only. When it is desired to work very wide stock, the throat of the machine at *k* is made deep, that is, the upper part of the machine overhangs far enough to take wide stock and allow it to project into the throat. Machines of this type are also sometimes driven by an electric motor mounted on the frame. For very large or broad work, the guides *l*, *m* for the head are frequently mounted in separate housings, and two or more eccentrics are used for operating the head.

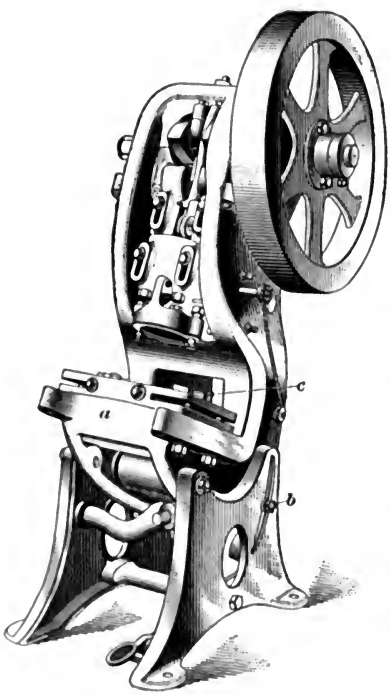

FIG. 27

28. Inclined Presses. In the form of press shown in Fig. 26, the finished work passes out of the way by falling through the opening *g*, to the floor; unless some such means is provided the work must be removed from the dies by hand. The inclined press shown in Fig. 27 has been found convenient for discharging the finished work. The table *a* can be set at any desired angle by adjusting the nut *b*. The stock is passed into the machine from the front, and the

finished work slides out through the opening *c* at the back and accumulates, or drops into a box, behind the machine. In other respects, this press is similar to the one already shown.

HORIZONTAL PRESSES

29. Bulldozers.—The bulldozer is a horizontal press for performing bending, forging, and welding operations. One of the most common forms is shown in Fig. 28. In the illustration, a pair of dies *a*, *b* is shown in position for bending the piece of work *f*. The movable die *b* is attached to the ram *d* which is driven by the connecting-rods *c*, *c*. These machines are made to be driven by a belt, engine, or electric motor, and are used for a very large variety of work, especially for such work as the forgings for car trucks, for agricultural implements, etc. An almost endless variety of work can be done on them, including forging and welding. The stock is generally put in the dies hot, and in most cases simple dies similar to those shown in Fig. 28 are used. For bending some forms, however, it is necessary to use compound, or winged, dies. A set of these fitted for use in the bulldozer is shown in Fig. 29. The die *d* is attached to the stationary head, while the ram is attached to the movable head. The block *a*, with its attached wings in the positions *w' w'*, is placed in front of the block *d* and the stock *b* laid across it. As the ram or plunger moves forwards, it presses the stock against *a* and as it forces *a* into the die *d*, the wings are closed into the position shown by the full lines at *w*, *w*, thus bending the stock *b* against the sides of the

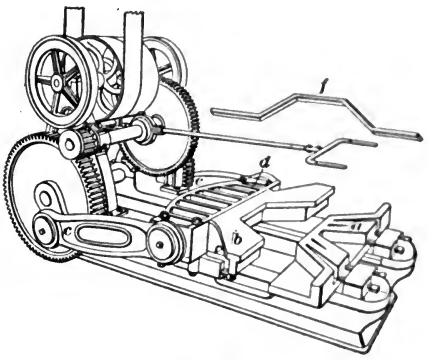

FIG. 28

plunger. This arrangement is used in forming a strap with two right-angle bends. Dies with hinged parts are fre-

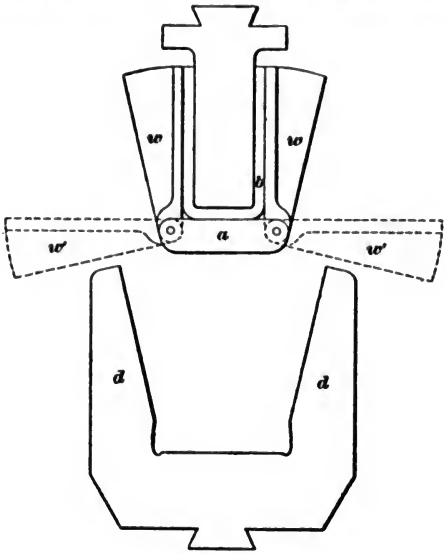

FIG. 29

quently called *second-motion dies*, and in many cases are found very convenient for irregular work.

30. Example of Horizontal Forging Machine Work. Fig. 30 shows an example of the class of work that can be done on a horizontal forging machine. The first stage is shown at (*a*), and consists of bending a yoke over the end of the bar. This end of the bar is then brought to a welding heat and squeezed or pressed into the form shown at (*b*). It is necessary to trim off the fins from a piece like that shown in Fig. 30, in which two squeezes are used to bring it to the required form after

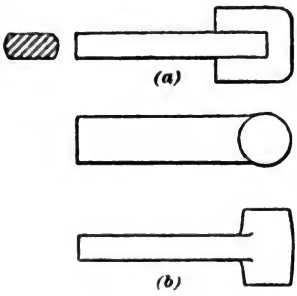

FIG. 30

welding it. It is, therefore, taken to the anvil, the fin trimmed off, the piece dipped into water for a moment to

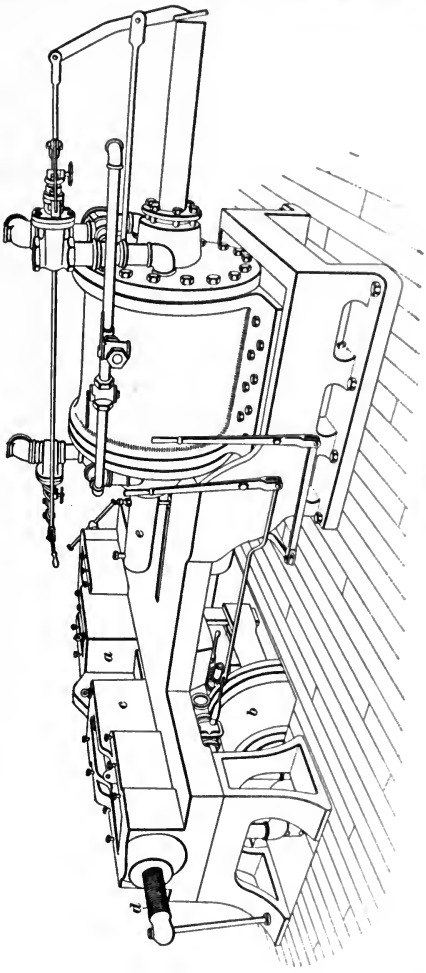

Fig. 31

remove the scale, and then given two or more squeezes reversed in the dies, so as to squeeze it first in one direction and then in the other.

Horizontal forging machines are built in all sizes, to take stock from $\frac{3}{4}$ inch to 6 inches in diameter. These machines are used in most cases for small upsetting or heading, although they may be used for work similar to drop-hammer work.

31. Pneumatic Forging Machine.—In order to combine the advantages of the hammer and the press in the same machine, the **pneumatic forging machine,** shown in Fig. 31, has been brought out. It consists of a heavy cast-iron bed that carries a set of dies at one end, one of which, *a*, is operated by a pneumatic cylinder *b* situated beneath the end of the machine. The work is introduced between the dies *a* and *c*, the position of *c* being determined by the screw *d*. A suitable die is attached to the end of the piston rod *e* so that it can be brought to bear on the side of the work. The die *a* can be brought up so as to strike or press the work; in like manner the die attached to *e* can be used to press or to deliver a blow. By using suitably designed dies, similar to those shown in Fig. 28, almost any desired form can be made.

SPECIAL FORGING OPERATIONS

SPECIAL FORGING EQUIPMENT

HEATING FURNACES

1. As heating is necessary in all forging work, suitable furnaces must be provided in connection with forging operations. The form of the furnace varies with the nature, size, and quantity of the work to be heated, and with the nature of the fuel used; in many cases, one form can be used for several classes of work, while in other cases each class of work requires its own special form of furnace. Gas-fired or oil-fired furnaces are now preferred to those fired with coal or coke, because they can be easily controlled so as to maintain a more uniform heat. In all heating furnaces, the air supply should be so regulated as to produce incomplete combustion in the portion of the furnace where the heating is done; in other words, there must be no excess of air present, as such excess will oxidize the metal. In the case of heating furnaces using solid fuel, it is necessary to provide for the admission of air beyond the heating chamber, so as to fully burn the gases, if it is desired to prevent the escape of smoke from the chimney.

2. Small Coke Furnace.—For heating the ends of bars to be worked under drop hammers or in forging machines, a small **coke furnace**, like that shown in Fig. 1, is frequently used. This furnace is enclosed in cast-iron plates, the front and back plates a, b being bolted to flanges on the side plates c, d. The grate bars e are supported on bearing bars placed in the furnace lining, which is made of firebrick. The ashes are removed from the ash-pit through the door f, and

Copyrighted by International Textbook Company. Entered at Stationers' Hall, London

the blast pipe is generally inserted into the ash-pit through an opening in the plate *b*; a pressure of from 4 to 12 ounces is maintained in the pit. A bed of coke is kept on the grate bars and the material to be heated is placed on the coke. The opening *g* through which the work is placed in the furnace is usually closed, or partly closed, by a firebrick-lined door, sliding between the vertical guides shown at the right and left of the door. The gases escape through a flue connected with an opening in the plate *b*. While the work is being heated, the door is kept closed as much as possible, to

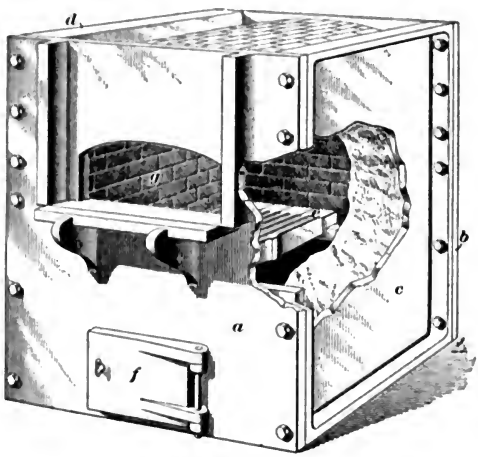

FIG. 1

prevent any inrush of cold air over the top of the fire. The door is also usually provided with a counterbalance so that it can be raised or lowered with ease.

3. **Reverberatory Furnace.**—For heating large work, a **reverberatory furnace** is usually employed. The work is placed on the hearth and heated by the hot gases passing over it, and the heat reflected from the roof, which is a firebrick arch. In some cases, the roof is arched in such a way as to focus the heat on some part of the hearth. In a reverberatory furnace, it is necessary to construct the lining of the furnace of firebrick laid in fireclay. Furnaces of this type

may use coal, oil, or gas, and for some classes of work wood; but good bituminous coal is the fuel most commonly employed. The fuel is usually burned with forced draft, the bed being kept deep enough to insure a slightly smoky flame, which indicates incomplete combustion. This makes it certain that oxidation will not take place from air passing through the grate.

Fig. 2 shows a longitudinal section of a furnace used in heating work for a steam hammer. The coal is fed on the grate *g* through the fire-door opening at *h*, which is so placed that a suitable depth of fire can be maintained between the

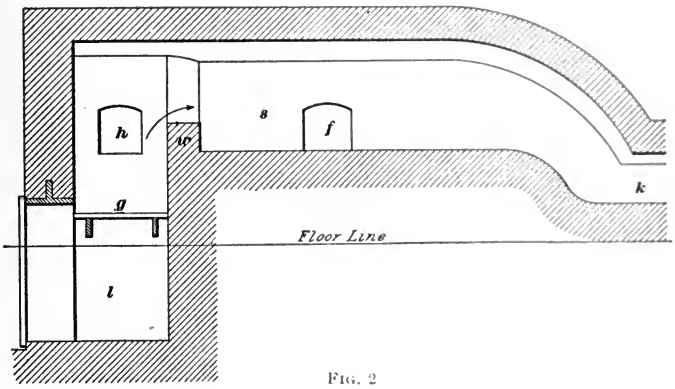

FIG. 2

grate bars and the bottom of the door. The hot gases pass over the bridge wall *w*, and burn in the chamber *s*, the waste gases escaping through the flue *k* into the stack. The ash-pit is shown at *l*. A plan view of the furnace is shown in Fig. 3, a side view in Fig. 4, and an end view in Fig. 5 (*a*), while Fig. 5 (*b*) shows a section crosswise through the hearth. The furnace has three doors *c*, *d*, and *e* on one side, and door *f* and the fire-door *h* on the other; the door *f* is opposite the door *d*. This is a great convenience in heating long pieces of work, which are allowed to extend through both openings. All the openings through which work is put into the furnace are closed by doors lined with

firebrick slabs and suspended by chains from counterbalanced levers. They are raised and lowered by the handles *p*, *p*,

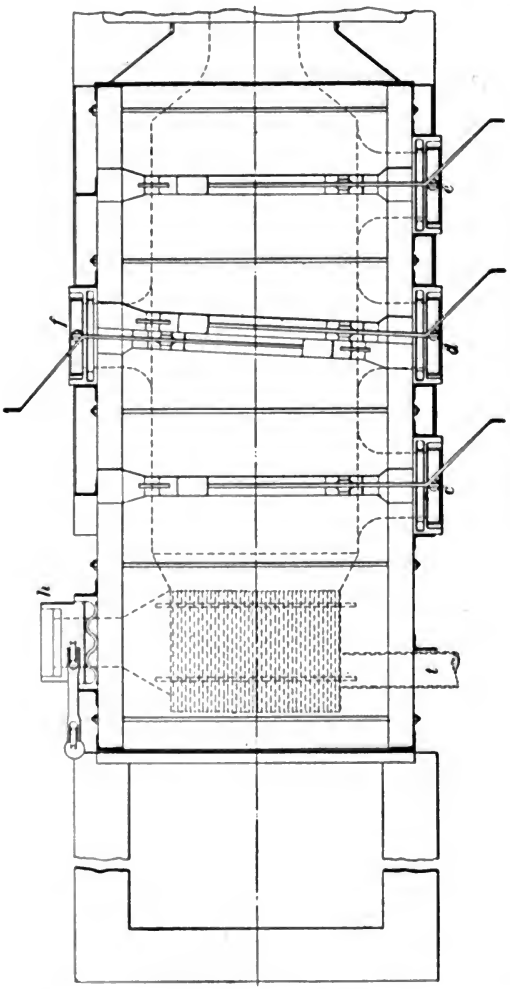

FIG. 3

while the weights *n*, *n*, Figs. 4 and 5 (*a*), serve to hold them in any desired position.

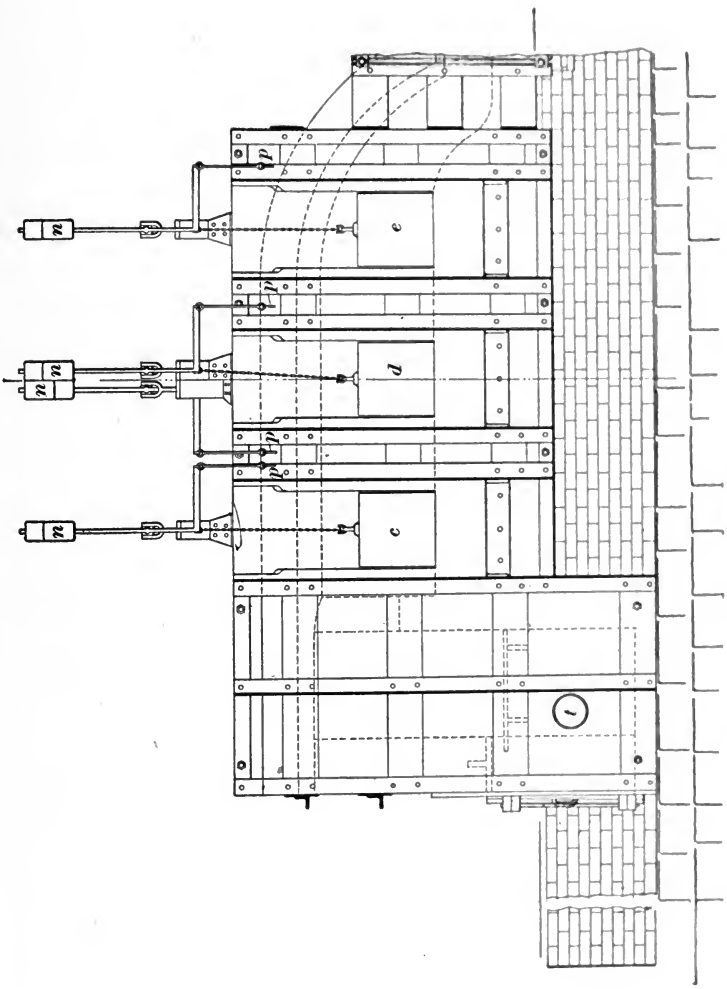

FIG. 4

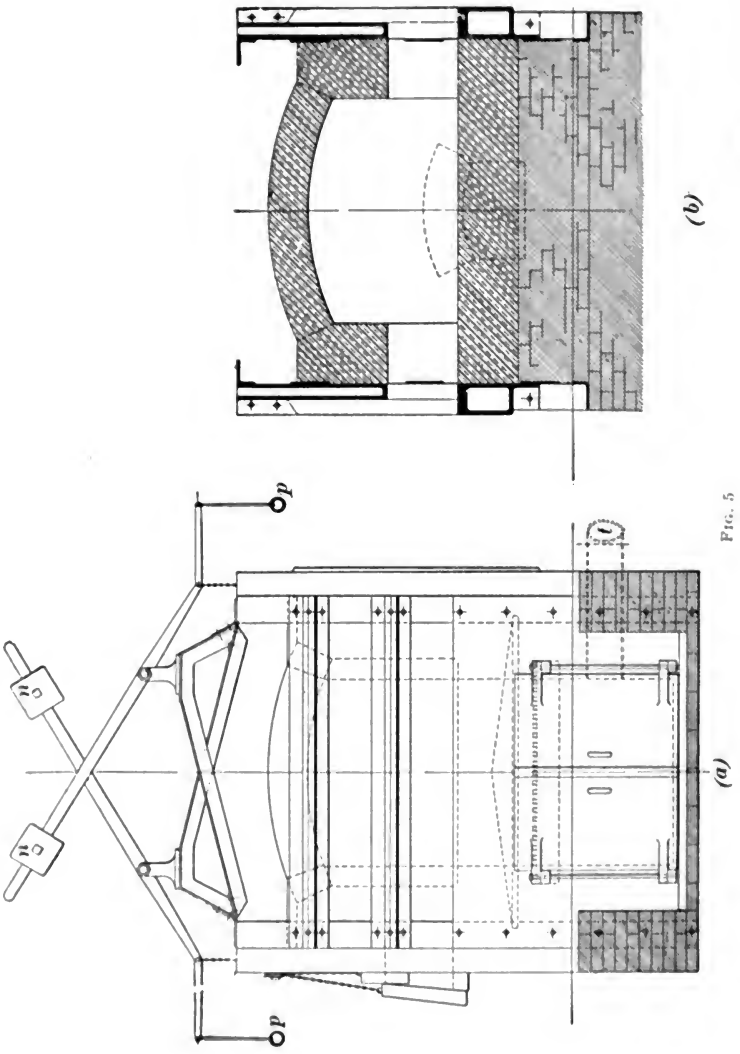

FIG. 5

The bed, or hearth, of the furnace is usually made of clean, sharp, silica sand tightly rammed into nearly the shape of the hearth. A fire is then placed on the grate and kept burning until the surface melts and forms a smooth glassy hearth. Sometimes clay is mixed with the sand.

In heating work, sand is very frequently used as a flux to carry off any iron oxide that is formed on the surface of the metal. Iron oxide also attacks the surface of the hearth, forming a fusible slag with it. This slag flows into the slag pot through an opening at the foot of the stack, toward

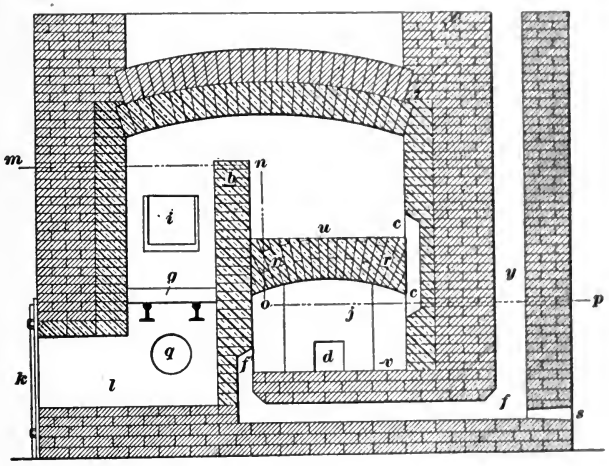

FIG. 6

which the hearth slopes. A blast of from 4 to 12 ounces is supplied to the fire by the blast pipe *t*, Figs. 3, 4, and 5 (*a*), which is attached to one end of the ash-pit. Usually, the blast is obtained from the fan that furnishes blast for the forges.

In some cases, the counterbalance weights for the doors are placed at the side of the furnace, so as to leave the top clear. A boiler may then be set above the furnace, and the heat from the waste gases utilized to furnish steam for steam hammers, for engines driving the fans, etc., the waste gases being led up under the boiler before they pass up the stack.

4. Double-Decked Reverberatory Furnace.—In some shops where a variety of work is done and yet

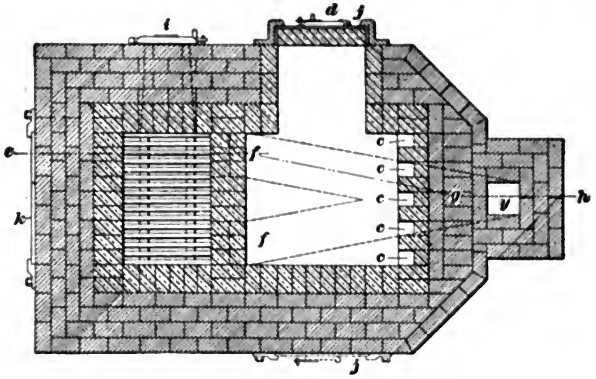

FIG. 7

where there is not enough heavy forging to warrant the installation of a large reverberatory furnace, the **double-decked reverberatory furnace** shown in Figs. 6 and 7 will be of service. Fig. 6 shows a section along the line *e f g h* of Fig. 7, and Fig. 7 shows a section along the line *m n o p* of Fig. 6; the same reference letters designate the same parts in both figures. In this furnace, the grate *g*, ash-pit *l*, fire-door *i*, ash-pit door *k*, and blast-pipe connection *q* are arranged as in the reverberatory furnace already described. When the flame passes over the bridge wall *b*, it enters a relatively small chamber with a hearth *u*, on which is placed the work that is to be heated to a high temperature. After

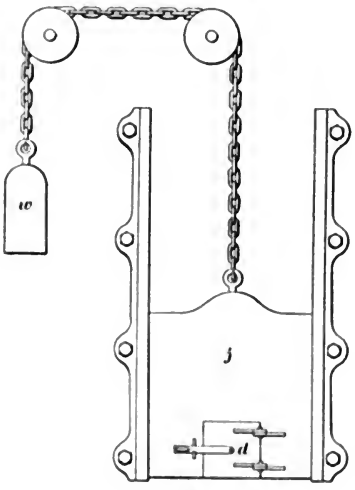

FIG. 8

it passes over the hearth *u*, the flame passes through the openings *c*, *c* to the lower hearth *v*, thence through the openings, or flues, *f* to the chimney *y*. The lower hearth *v* is used for heating work for tempering, annealing, case-hardening, etc. The door for the upper hearth, which is on one side of the furnace, is not shown in Fig. 6; and the door *j* for the lower hearth is on the other side. The slag hole *s* is at the base of the chimney. The detailed arrangement of the furnace doors *j* for closing the large openings is shown in Fig. 8. Each door contains a smaller door *d*, which may be opened to see the condition of the work, or through which small pieces may be introduced. The main doors are kept in place by counterbalance weights *w*. The advantage of placing the fire-door at one side of the furnace is that the fire can be spread more evenly than with the door at the end of the furnace, since the coal can be raked along the length of the bridge wall so as to maintain an even fire at all points.

5. Furnace for Long Work.—In shops where long pieces, such as angles and other structural shapes, must be heated, a furnace of the form shown in Fig. 9 will be found very useful. This furnace consists of a cast-iron pot, or box, *a*, which serves as an ash-pit and on the upper surface of which the grate bars are arranged; the ashes are removed through the door *b* and the blast is furnished by a blast-pipe connection

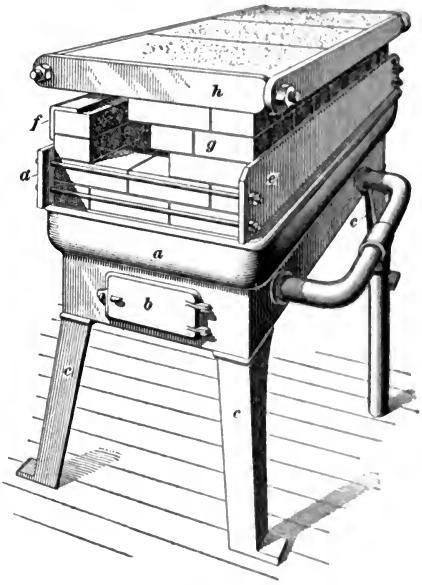

FIG. 9

at the back of the ash-pit. Immediately above the cast-iron box *a*, which is supported on cast-iron legs *c*, is a section supported by the plates *d* and *e*, which are held in place by bolts. Above plate *d* is an angle iron *f*, which protects the front edge of the furnace. The back wall and a portion of the ends of the furnace are built up with brick *g*, and the cover or roof is made of several firebrick slabs held together by iron binders *h*; a coke fire is maintained in the furnace. Long work may be laid so that its ends project through the open ends of the furnace, permitting it to be heated the whole length of the fire. This furnace will be found especially useful in heating long angle irons in the center for bending. When curved or irregular pieces must be heated, the cover is frequently lifted off while the work is being placed in the furnace, and then replaced during the heating. If large numbers of short pieces are to be heated on the ends only, the pieces are laid across the angle iron *f* and allowed to project into the fire. When the furnace is not in use for heating long work, the openings in the ends can be closed temporarily with firebrick. Such a furnace as this is generally used in a large open building where structural shapes are put together, and hence the escaping gases are not objectionable. If the furnace is to be used indoors in winter, an exhaust pipe to carry away the gases can be arranged at the back of the furnace.

6. Special Heating Furnace for High Temperatures.—When a large amount of work is to be heated, it is often convenient to make the process continuous by using a conveyer that will carry the work slowly through the furnace, the cold pieces being placed on the conveyer at one end of the furnace and removed at the other end properly heated for forging. Such a furnace is shown in Fig. 10. The conveyer consists of a series of small trucks *a* that carry fireclay blocks *b* on which the work *c* is placed at one end *f* of the furnace and carried through to the other end, by which time it is thoroughly heated. The trucks then return empty along a track under the furnace, to be loaded again with

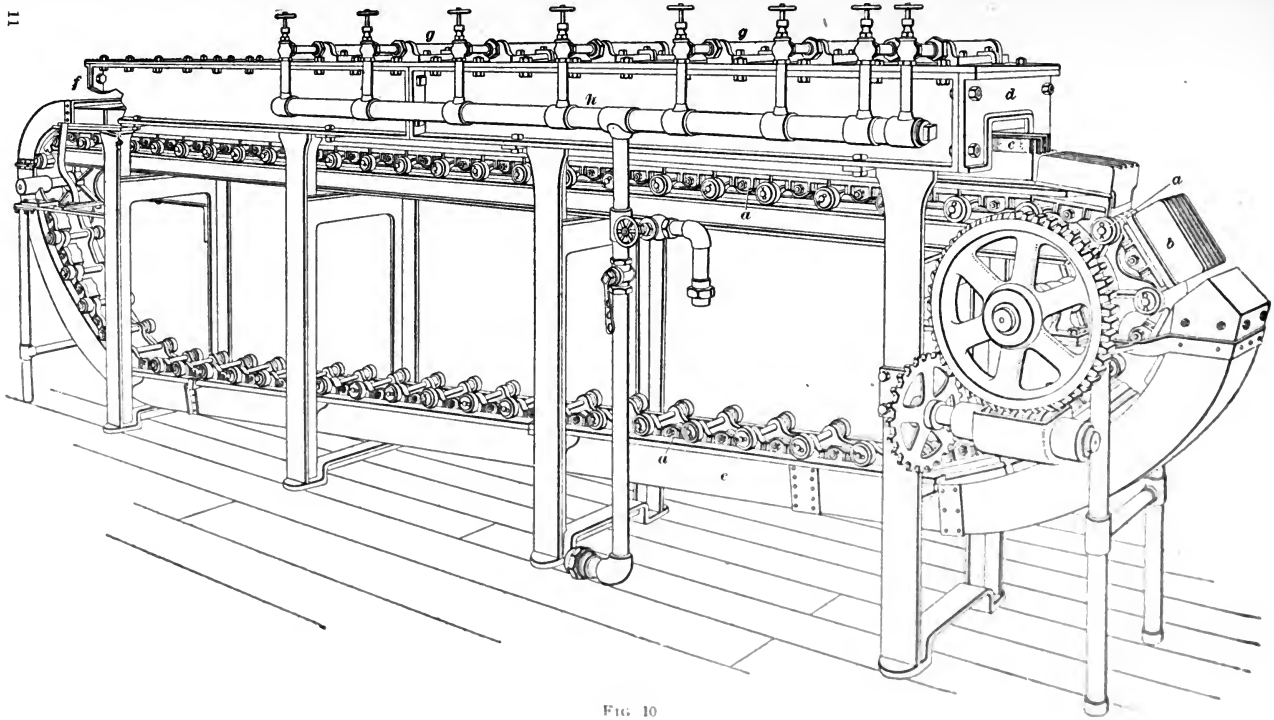

Fig. 10

work. A metal casing *e* surrounds the blocks *b* on the return, so as to prevent undue loss of heat.

The furnace *d* is a rectangular iron box lined with firebrick, and is heated by gas burners *g*, *g* placed on the top of the furnace and supplied by a pipe *h* extending along the side. The trucks do not enter the furnace, because the temperatures are too great to be withstood by cast iron, but the fireclay blocks project into the flame.

The burners can be controlled separately, so that any desired temperature may be obtained. They are placed so as to direct the flame toward the end *f*, so that as the work enters the furnace it is first heated by the blocks on which it rests, then by the hot gases, and finally by the flame under which it passes.

HANDLING DEVICES

7. Trolley System.—Handling devices are necessary in connection with heavy work, such as that forged by steam hammers. If the work must be frequently carried back and forth between two points, a hoist block may be suspended from a trolley running on an overhead rail *r'*, Fig. 11. In this illustration, the portion of the track *r''* between *a* and *b* serves as a switch, which is shifted by means of the chains *c*, *c*. The traveling carriage, or trolley, is shown at *d*, and the differential chain pulley, operated by hand, is shown at *e*. By putting in switches and branches leading to the places where the hoist is needed, its usefulness is greatly increased. The switches must have guards to prevent the trolley from running off at an open switch, or a lock to make it impossible to turn the switch when the trolley is on one of the branches. One advantage of any trolley system is that the trolleys with their hoisting gear can be made to travel from one department to another, out into the yard, or anywhere about the plant, without great cost for equipment.

8. Motor-Operated Hoists.—The hand-operated chain block is frequently replaced by a motor-operated hoist, the motor being driven by compressed air or electricity.

Air-operated hoists of this character are frequently used on jib cranes, where the travel of the hoist along the trolley is

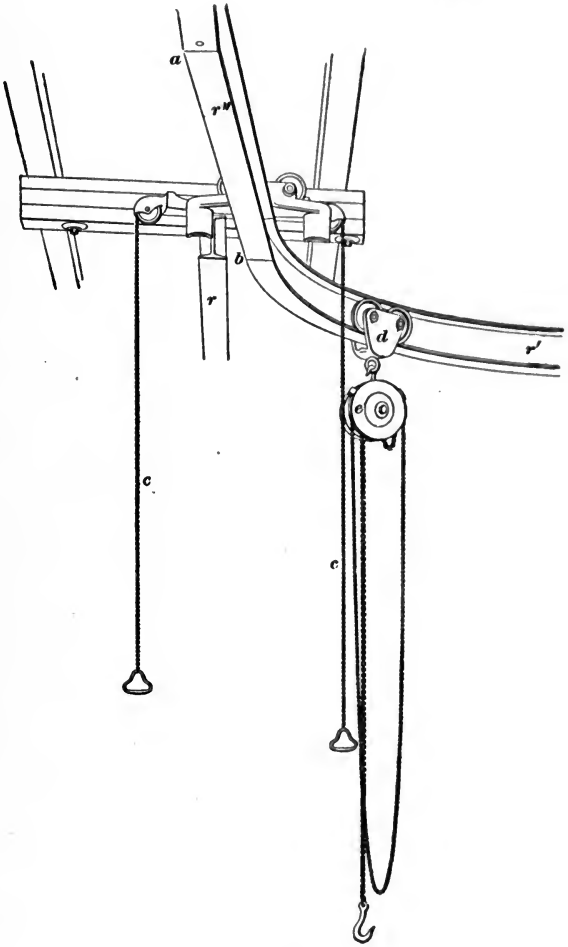

FIG. 11

limited, and hence only a short air hose or air connection is needed. In the case of trolley systems where the hoist is to

travel a considerable distance, the compressed-air system cannot be used to advantage. One advantage of the air-operated hoist is that the headroom taken up by it is very small compared with the height of lift itself. Electrically operated motor hoists have the advantage of not needing any hose connection, as they take their current by means of contact brushes from a trolley wire, which can be strung along the entire length of the trolley system.

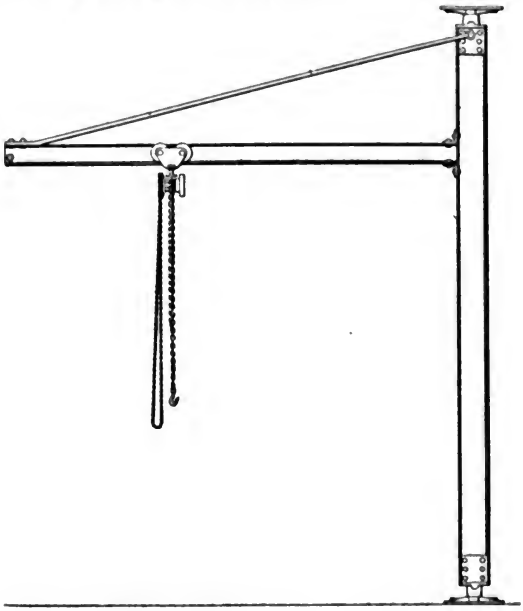

FIG. 12

9. Jib Crane.—A jib crane, shown in Fig. 12, is another convenient device for handling heavy pieces. Swinging in the arc of a circle, it enables work to be handled on any part of the floor over which it swings.

10. Traveling Crane.—In smith shops where very heavy work is forged, a heavy traveling crane is more serviceable than any other hoist system, as it may span the width of the shop and travel throughout its length, so as to

command the entire shop. The crane for this class of work may be one of any of the ordinary hand or power types, depending on the class and quantity of the work to be handled.

11. Pneumatic Hoist.—A very convenient lift that may be used in connection with any crane, or directly on an overhead track, is the pneumatic hoist, a form of which is shown in Fig. 13. It consists of a cylinder c containing a piston which may move upwards or downwards within it. A rod r, having an eye e in its lower end, is attached to the piston. Compressed air from a pipe p is admitted into the lower end of the cylinder through the three-way valve v, and may be discharged into the outer air from the cylinder through the same valve. Pulling the hand chain on one end of the controlling lever admits the compressed air, which forces the piston upwards in the cylinder and lifts the load attached to the eye e; pulling the chain attached to the other end allows the compressed air to escape from the cylinder and lowers the load; placing the lever in mid-position, or horizontal, holds the load stationary at any desired point.

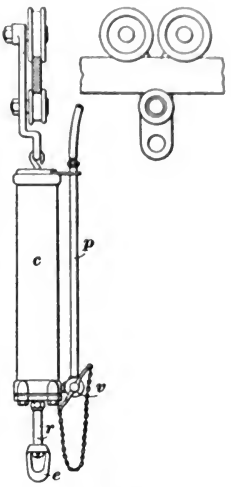

FIG. 13

12. Relative Advantages of Handling Devices. The stationary differential chain block, motor hoist, or pneumatic hoist can be used only at single points; but when they are suspended from trolleys running along overhead rails, they can be used at all points of the floor under the rails. By the use of switches, sidings, etc., their field of usefulness may be greatly increased; it will, however, require a very complicated system of switches to make these forms of lifting and conveying devices thoroughly efficient, even for a comparatively small floor space.

MISCELLANEOUS OPERATIONS AND DATA

RIVETING

13. Hand Riveting.—It is often desired to fasten together two pieces of iron or steel by **riveting,** as, for example, in joining the plates that form a steam boiler. Holes are punched or drilled through both pieces, and a **rivet,** which is a pin having a head at one end, is put through both holes. The small end of the rivet is then upset so as to form a second head. Riveting may be done cold, but if a tight joint is required the rivet is heated and headed while red hot; in cooling, it will contract and draw the heads together, thus making the joint tighter. The rivet holes in plates are generally punched; this makes them slightly tapering, and if two punched plates are joined the holes may come together in any one of three ways, as shown in Fig. 14 (*a*), (*b*), and (*c*). If the rivets are hot enough, they will readily upset so as to fill the holes in any case, but passing them through the cold plates frequently chills them so that they will not upset properly. For this reason, when the holes are not in line, they should be smoothed with a **drift pin,** or, better still, reamed out after the plates have been clamped in position, as shown in Fig. 14 (*d*). The reaming also removes some of the injured metal from the sides of the holes. The drift pin is a smooth, slightly tapered

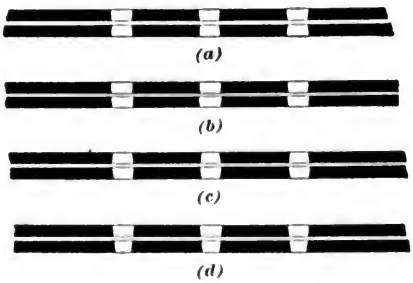

FIG. 14

pin that is driven into the holes to expand them in places where they are too small, thus giving them an even taper. The reamer gives the same result by cutting away the rough edges of the hole. Drifting strains or distorts the metal, and should never be done on any riveted joint that must bear a heavy load. The hot rivet is put into the hole, and a heavy piece of iron or a hammer is held against the head while the second head is being formed on the other end. The body of the rivet should completely fill the holes in the plates after the rivet is headed.

14. Riveting Machines.—Where a large number of rivets are to be headed, the work is done by machine, which does it much faster and better than it can be done by hand, because the rivet is headed before it has had time to cool. The hammer of the riveting machine is sometimes driven by compressed air at the rate of several hundred blows per minute, the rapidity of the blows being more necessary than their force. In forming the head, quick blows with a light hammer upset and spread the iron, while heavy blows tend to bend it. Another form of riveting machine presses the end of the rivet into a head by forcing a forming die against it. This machine is operated by compressed air or by water pressure, and gives satisfactory results, as the flow of the metal under the heavy pressure completely fills the rivet holes. In taking riveted plates apart, it is better to drill the rivets out than to drive them through, since it is less liable to injure the plates.

FORGING STRUCTURAL SHAPES

15. Bending Angles.—With the more general use of structural shapes and plates, it has become necessary to bend angles, I beams, deck beams, etc. into various shapes or forms. Where a considerable amount of this class of work is be done, **bending plates**, Fig. 15, are used; these are large surface plates with holes in their surfaces, in which are fixed the dogs and clamps for holding the work. For

bending the angle *a* to the desired curve, the form *b* is first clamped to the bending plate by means of a **dog** *c*; the end of the angle is also held down by means of a dog *d*. These dogs are simply curved pieces of metal that are sprung into the holes in the plate and driven down into contact with the work.

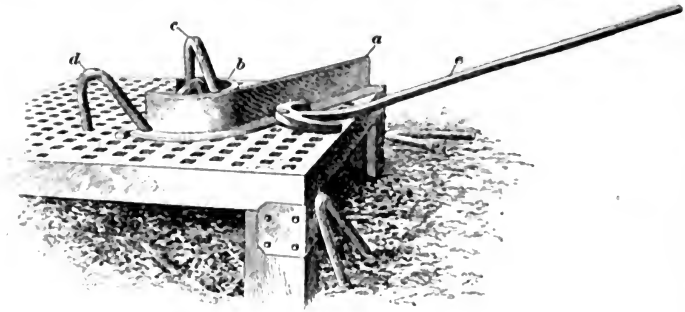

FIG. 15

The angle is bent around the form by means of a **moon** *e*, which is a crescent-shaped piece of metal secured to a long arm and provided with a pin or tongue near the end. This tongue is dropped into one of the holes in the plate, and the angle is bent by sweeping the moon around. Of course, as

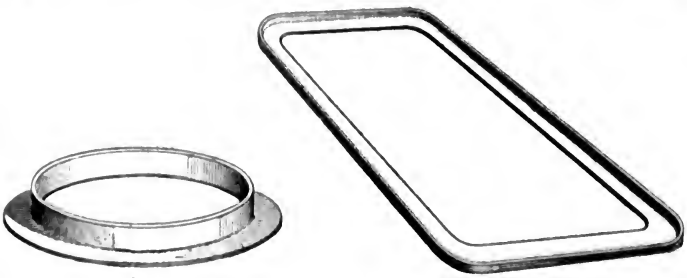

FIG. 16

the angle bends, the outer edge of the projecting flange will be stretched and drawn thin, and care must be taken to see that it does not buckle. By careful handling, very sharp curves can be bent in this way. Fig. 16 (*a*) shows an angle that has been bent into a circle and afterwards welded, while

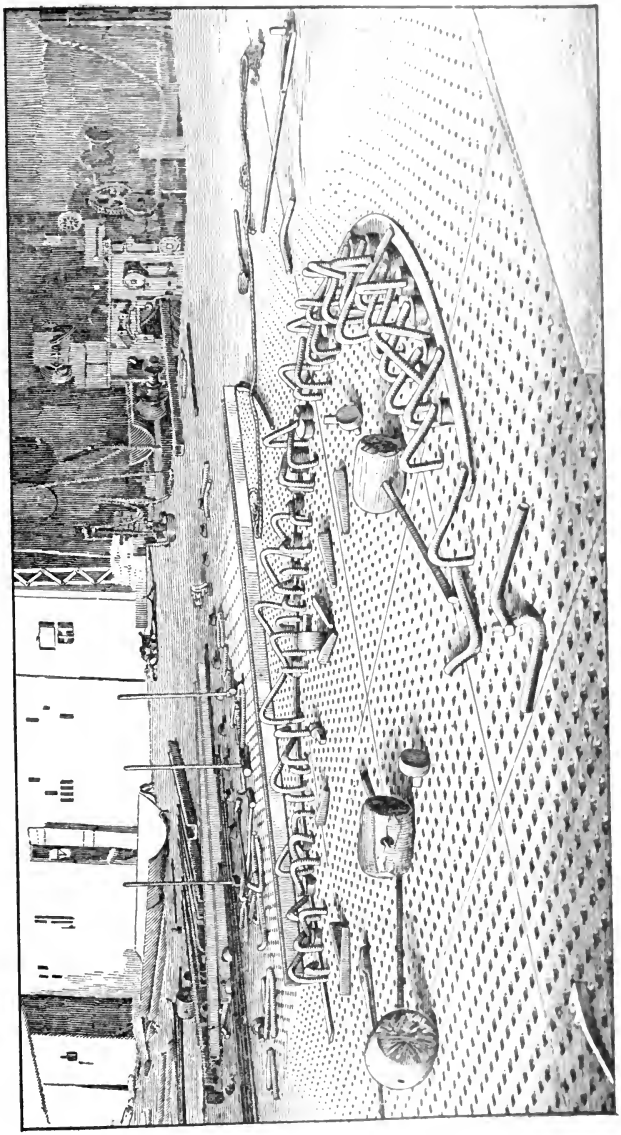

FIG. 17

Fig. 16 (*b*) shows an angle bent to form the frame for a door; both of these were bent around forms by the use of moons. Large bending floors, made up of several bending plates laid side by side, are used in bending very large work. Forms made of iron or steel bars bent to the proper shape are clamped on the bending floor with dogs, as shown in Fig. 17. The piece to be bent is then forced around the form by means of moons.

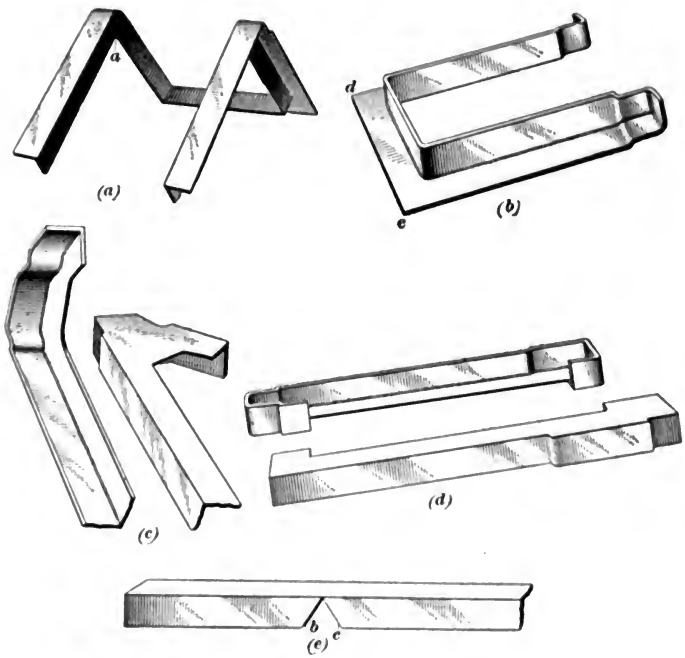

FIG. 18

16. Welding Angles.—In some classes of work, it is often necessary to bend angles and other structural shapes to such sharp angles that it is impossible to make the metal flow to the desired form. Four examples of this nature are shown in Fig. 18. In making the piece shown at (*a*), it is necessary to cut out a portion of the inside flange of the angle

at the point *a*, so that the angle before bending will appear as shown in Fig. 18 (*e*). After bending, the faces *b* and *c* are brought together and welded. In like manner, the outer corners *d*, *e* of the piece in Fig. 18 (*b*) must be split and pieces welded in after bending. Similarly, pieces must be cut out of, and others welded into, the webs of pieces (*c*) and (*d*). If the parts are kept clean and the fire in proper condition when making these welds, no flux is necessary, as the flux tends, in many cases, only to eat away the surface of the metal.

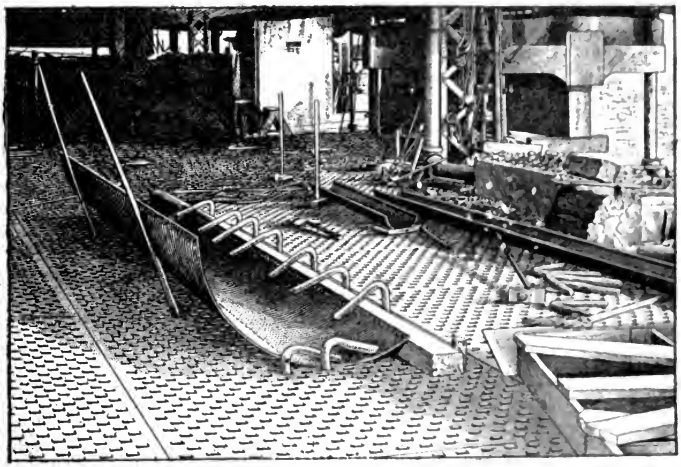

FIG. 19

17. Bending Structural Shapes.—Channels, I beams, deck beams, and other structural shapes are bent by using proper forms. In some cases, it is necessary to have an outline of the sectional shape formed in the side of the former used. In all work on structural shapes, care must be taken to see that the steel is not heated very far above the point of recalescence, except for welding; and any pieces that must be heated to a higher degree should be allowed to cool after they are forged to shape, and then heated to just above the point of recalescence, and allowed to cool once more. This will relieve the stresses and restore the

fine texture of the metal and insure the greatest possible strength in the piece.

18. Bending Plates.—In bending plates into irregular forms, they are first brought roughly to shape under suitable presses and are then secured to the bending floor by means of dogs, as shown in Fig. 19. Suitable bars or supports are placed at the sides, and the plates formed to a templet by the use of wooden mauls, three of these mauls being shown on the bending floor in Fig. 16. By careful work in this way, a plate can be formed to any required shape.

ELECTRIC WELDING

19. The Electric Current.—The flow of an electric current in a wire is, in many ways, like the flow of water through a pipe. If a pipe connects two vessels, one of which is placed much higher than the other, the water will flow from the higher to the lower, and will exert considerable pressure at the lower end of the pipe. It is this pressure, which is measured in pounds per square inch, that causes the water to flow. In the case of an electric current it is necessary to have a pressure in order to cause the flow, but this pressure is measured in **volts** and not in pounds.

The amount of water that flows through a pipe is usually measured in gallons, and the rate at which the water flows is measured by the number of gallons per minute. In the case of the electric current, the rate of the flow is measured in **amperes.**

Now, when water flows through a pipe, the bends, valves, and rough sides of the pipe tend to prevent the flow. If a fine wire netting is placed over the end of the pipe, the flow is much reduced because the netting hinders the passage of the water. Likewise, the flow of electric current is hindered by the resistance of the wire. The smaller the wire, the greater its resistance, just as a decrease in the size of a pipe will increase the resistance to the flow of water. The current will heat the wire, and the larger the number of amperes, the

greater is the heating effect. By increasing the flow of current, it is possible to heat the wire to its melting point.

20. Theory of Electric Welding.—The fact that the temperature of a body is raised by passing a current of electricity through it is the principle on which **electric welding** depends. The heating is greatest at the point where the resistance is greatest, which is at the contact surface between the ends of the pieces to be welded. Hence, in electric welding, the ends of the pieces to be welded are brought to a welding heat by passing a large current through them, and when they are heated they are pressed together firmly, thus forming the weld. The heating power of a current depends on the rate of flow, or the number of amperes. In electric welding, the pressure may be only a few volts or even a fraction of a volt, while the current is large; that is, a large number of amperes is required to obtain the necessary heating effect.

21. Apparatus Used in Electric Welding.—An electric welding machine must provide means for holding the pieces to be welded, for heating them by the electric current, and for forcing them together to form the weld. A welding machine used in welding flat iron hoops, shown in Fig. 20, consists of a heavy cast-iron base *a* that supports two clamps *b*, *c*, which are made of bronze and operated by the handles *d* and *e*. The clamp *b* is fixed, but the clamp *c* can be moved toward the clamp *b* by means of the lever *f*.

To form a weld, the ends of the hoop are fixed firmly in the clamps. as shown, the ends brought together, and the current turned on. The current passes into one end of the hoop from the clamp *b*, across the minute air gap between the ends of the hoop, and then back through the clamp *c*. But the resistance of this small air space, or gap, between the ends is great enough to bring the metal ends to a welding temperature. As soon as the welding temperature is reached, the lever *f* is pulled toward the left, when the joint at *g* straightens and moves the clamp *c* to the left. This forces the two ends together and thus completes the

weld. Water flows through the pipes h, h into the clamps, which are hollow, and prevents them from becoming overheated. The rubber tube h' allows water to circulate from one clamp to the other, and permits the clamp c to be moved, which could not be done if h' were a solid pipe.

Since water and iron are both conductors of electricity, a small part of the current will flow from one clamp to the other through the water in the tube h' and through the lower solid part of the hoop. But since the resistance along each

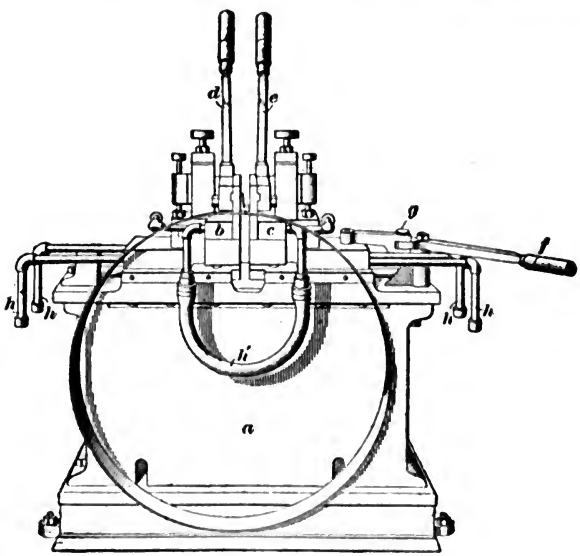

FIG. 20

of these paths is much greater than that directly between the clamps, the small amount of current thus lost does not affect the action of the machine. By changing the form of the clamps, this machine can be used for other classes of work.

22. Special Applications of Electric Welding.—Electric welding is especially useful for a number of classes of work. In ice-making plants, long coils of pipe free from joints are required. These are made by butt-welding a

number of short pieces into one long, straight piece and then bending this into the required coil. The short pieces are welded by electricity. If, after the coil is complete and tested, a leak develops, the leaky section can be cut out and a piece welded in its place. Electric welding is much used for the joining of street-car rails, the work being done without removing the rails from the track. It is also used for welding tires or other continuous sections.

23. Advantages of Electric Welding.—When a piece is heated in a fire, there is danger of burning the metal at the surface before the center becomes hot enough for welding; this is due to the fact that the heat travels from the outside toward the center. In electric welding, the reverse is true, as the heat travels from the center to the outside, and hence the chances of burning the metal are very much less in the electric-welding process than in the other. Also, since the heat travels from the center, the center is naturally hottest, and hence the weld is best at the center. In electric welding, the temperature can be closely regulated, and the danger of injuring the metal thus made very slight. While the work is being heated for electric welding, it is always held in clamps and the proper relationship of the parts thus assured. By the electric-welding process, metals can be welded that cannot be united in any other way; as, for instance, copper and all the copper alloys may be welded by this process. Pieces that have been partly or wholly finished can be welded by the electric process without injuring the finish beyond the weld. It is claimed that the cost of fuel is not greater, and is generally less than in forge welding, while the labor and time required are both greatly reduced.

EFFECT OF REPEATED HEATINGS ON METAL

24. Effect of Repeated Heating on Cast Iron.—If cast iron is heated repeatedly, it will increase in size with each successive heating; the volume has been increased as much as 40 per cent. This heating opens the grain of the metal and weakens it very greatly. Hence, gray-iron

castings should not be exposed to repeated heatings if it is desired that they retain their form and size. This increase of volume of the metal has, however, been put to practical use for increasing the size of parts that have become worn to such an extent that they no longer fill the space for which they were originally intended. To do this, the pieces are packed in air-tight boxes or tubes, heated to a dull red, and then allowed to cool.

25. Effect of Repeated Heating on Wrought Iron or Steel.—It has also been found that repeated heating of wrought iron or low-carbon steel reduces the volume slightly. Advantage may be taken of this shrinkage in cases where it is necessary to reduce slightly the diameter of holes in forgings, or the diameter of rings. If such pieces are heated to a dull red and allowed to cool slowly, or even if they are quenched in water, they will usually be found to have decreased slightly in size.

THERMIT WELDING

26. Thermit.—If powdered aluminum or aluminum filings are mixed with a certain amount of powdered iron oxide and the mixture set on fire, a temperature of 5,400° F. may be obtained. Since this is far above the melting point of iron, it is possible to use this mixture, which is known as **thermit**, in making welds.

27. Making a Thermit Weld.—Thermit is used very largely for mending broken forgings and castings while they are in place, for joining the ends of rails on street-car tracks, and for similar work. An example of thermit welding is illustrated in Figs. 21 and 22. In Fig. 21 is shown the broken forging, which is part of a ship, and which would require other parts to be removed if it were taken to a shop to be welded. In order to prepare it for the thermit welding process, the metal at the break is cut away until the ends are separated slightly, as shown. Then a large cup-shaped mold is made around the piece at the break, into

which molten steel is poured. As the mold encloses the broken piece, the molten metal flows between the ends of, and around, the piece, and when cool forms a solid collar *a*, Fig. 22, that firmly unites the ends of the broken piece.

The molten steel is called **thermit steel.** It is made by burning thermit in an iron crucible or pot, Fig. 23, that is lined with refractory material; the hole at the bottom is stopped with an iron disk *b*, on top of which is placed an asbestos washer and a small amount of the refractory material with which the crucible is lined. The result of the burning is that the oxide of iron is changed into very hot molten steel.

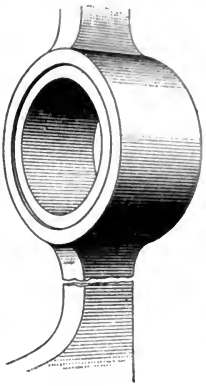

FIG. 21

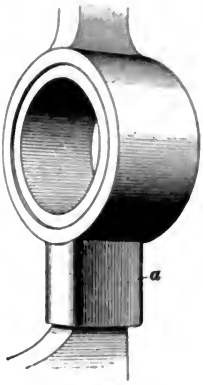

FIG. 22

The crucible is so placed that the opening in the bottom is

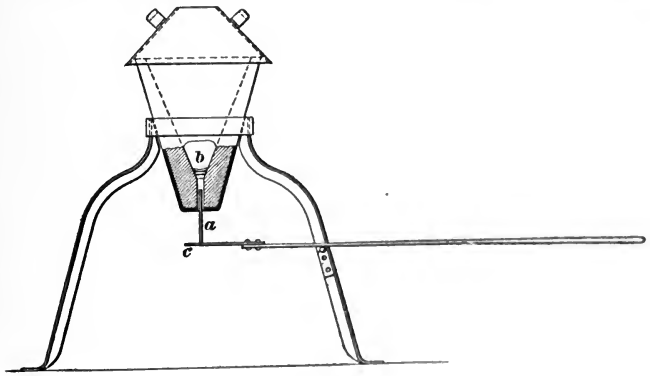

FIG. 23

above the mold surrounding the piece to be welded. After the thermit is burned, the rod *a* is forced upwards by raising the paddle *c*, which displaces the washer *b* and allows the

steel to flow into the mold. Since the steel has such a high temperature, it heats the broken surfaces to a welding heat, after which it unites with them and forms a solid weld. The aluminum in the thermit forms slag, and the mold should be so arranged that this slag may overflow and not come in contact with the work. Two pounds of thermit will produce 1 pound of thermit steel and 1 pound of slag. The slag, however, will occupy three times as much space as the steel, since it is not so dense.

28. In some cases, the heat produced by burning thermit is used to heat other pieces for welding. For instance, two pieces of pipe may be faced off square on the ends, butted together, fastened in suitable clamps, and then surrounded by a suitable mold, into which is poured a quantity of thermit burned in a ladle. In this case, the slag comes from the ladle first, sticks to the surface of the pipe, and thus prevents the metal as it flows from touching the pipe. The heat from the slag and thermit steel, however, will raise the ends of the two pieces to a welding heat, after which a very slight pressure of the clamps will give a perfect weld.

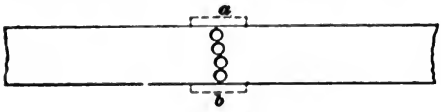

FIG. 24

Thermit has also been used in welding broken locomotive frames. In this work, it is not necessary to chip out a groove in the frame corresponding to the break, since the same result is obtained by drilling a series of holes along the break, as shown in Fig. 24, so that they come within $\frac{1}{4}$ inch or so of each other, and then arranging the mold so that the thermit steel will rise through these holes. The hot metal will melt off the points between the holes and form a perfect joint. The mold should be arranged so as to leave a collar of metal about the joint, as shown by the dotted lines *a*, *b*.

29. Construction of Molds for Thermit Welds. The molds for thermit welds should be so constructed that the thermit steel will flow through between the surfaces to

be joined, thus heating them. The mold used in joining a locomotive frame is shown in Fig. 25. The end of the broken frame is shown at *a*, the runner box into which the metal is poured at *b*, and the runner at *c*; the thermit steel flows from *b* through *c* and rises around and through the break at *a*. The amount of steel is so calculated that it will fill the space about *a*, the runner, and rise into *f* about level with the bottom of the passage *c*. When the slag comes down, it flows from *c* through *c* into the riser *f*, and if desired can be allowed to overflow through the opening *d*. In some cases, however, the riser *f* is made as large as the mold below it, and all the slag is retained in it and the passage *c*. Such a mold as this is made of fireclay and sharp sand, and must be baked thoroughly before it is used.

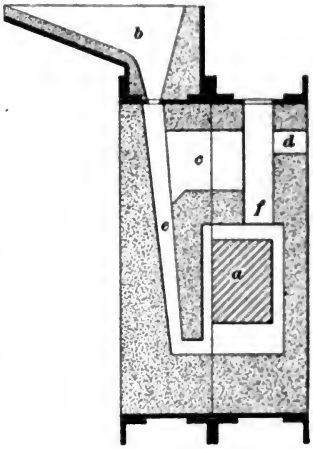

FIG. 25

Molds for thermit welds are sometimes made of firebrick, the brick being cut to the desired form and laid with as thin a layer of fireclay between the bricks as possible. The firebrick also forms a mold that is not liable to crack, and that can be readily and quickly put into place. The material used for the mold should be porous enough to allow all gases to escape easily. If a runner like *b*, Fig. 25, is required, it can be formed from a single firebrick slab, the runner being chipped out of the slab with a chisel. Owing to the very small amount of moisture present in a firebrick mold, it is possible to dry it and heat it, by means of a gasoline torch, before using.

SOLDERING, SWEATING, AND BRAZING

SOLDERING

30. Definitions.—The term **soldering** is applied to a process of joining metals by means of some metal or alloy that, when applied in a molten state, adheres to the heated surfaces to be joined and unites solidly with them while cooling. Other operations of a similar character are known as *sweating* and *brazing*, which differ from soldering chiefly in application and in the kind of molten metal employed in making the joint.

31. Solder.—The fusible metal used to join surfaces in making a soldered joint is called **solder.** It may be composed of tin and lead, in which case it is known as *soft solder;* or it may be made of copper and zinc, or of copper, zinc, and silver, being then known as *hard solder*, or *spelter.* Soft solder is usually cast in short bars or sticks that can easily be handled; it is also sometimes made in the form of wire. Hard solder, or spelter, is usually in the form of filings or coarse powder. The proportions of the metals used in making a solder will affect its hardness. Soft solder may be of different degrees of hardness, the harder varieties being often termed hard solder, which should not, however, be confused with the hard solder composed of copper and zinc. The kind of solder known as *half-and-half*, composed of equal parts of lead and tin, is suitable for joining lead, copper, brass, zinc, and iron to metals of the same kind, or for joining any of them to any other of the metals named.

32. Equipment for Soldering.—The equipment required for ordinary soldering is very simple, consisting of a copper bit, a fire-pot in which to heat it, the solder, and a flux to clean the surfaces that are to be united and to assist in the flow of the solder.

The **copper bit**, sometimes called a **bolt**, or **soldering iron**, Fig. 26, is a piece of copper *a* drawn to a point or

edge and fastened to an iron rod having a wooden handle. The bits used for soldering must be of sufficient weight to contain the heat necessary to heat the metal and fuse the solder during a reasonable length of time. If they are too

FIG. 26

light, the soldering is apt to be very uneven in quality, and the bits will require such frequent reheating that they will be troublesome. If they are too heavy, the work of handling them will be too laborious.

33. Heating the Copper Bit.—The copper bit may be heated in a charcoal fire contained in a sheet-iron fire-pot, in a blacksmith's forge, or in a special gas- or gasoline-fired furnace. The charcoal fire is rapidly going out of use, being replaced by gas- or gasoline-fired furnaces. Portable gasoline-fired torches are very commonly used for outdoor work; for work in the shop where much soldering has to be done, gas-fired furnaces are generally employed. Fig. 27 shows

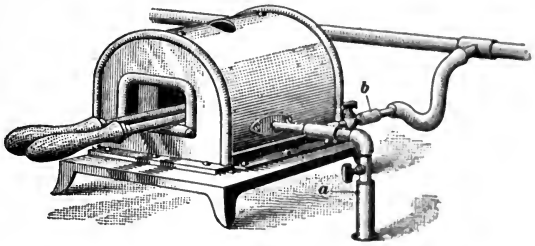

FIG. 27

one style of gas-fired furnace. The air and gas enter through pipes *a* and *b* and combustion takes place below a plate on which the bits rest; the flame rises and passes about the sides of the bits, thus heating them. The bits extend beyond the flame, so that the points are not likely to be burned off. By properly adjusting the air and gas supply for such a furnace, a heat may be maintained that will keep the bits at the proper temperature without burning them.

34. Soldering Fluid and Fluxes.—The least film of oxide or of grease or dirt on the surface of the metal will usually prevent the adhesion of the solder; therefore, the surfaces to be joined must be thoroughly cleaned, or coated with some substance that will reduce the oxides to the metallic state or that will destroy the grease and deposit a thin film of zinc on the surface to be soldered. For this purpose, a **soldering fluid** or some other kind of **flux** is used. Of all the fluxes used for soft soldering, the soldering fluid possesses the greatest range of usefulness. It is made by placing small clippings of zinc in hydrochloric (muriatic) acid that has been diluted with an equal quantity of water. The acid vigorously attacks the zinc, causing bubbles of gas to rise and forming chloride of zinc. Zinc should be added until the bubbles cease to rise while a small amount of the undissolved metal remains in the liquid. When the acid has dissolved all the zinc with which it will unite, the liquid is strained and thinned by adding an equal quantity of water. A few small pieces of zinc are then placed in the liquid to neutralize any free acid that may remain.

The same flux cannot be used on all metals. Sal ammoniac is commonly used on copper or brass, borax on iron, resin on tinned iron, and resin or tallow on lead. The soldering fluid, however, is the best all-round flux. By adding $\frac{1}{2}$ ounce of sal ammoniac to 4 ounces of the liquid, it can be used in soldering iron or steel without first having to tin the surfaces to be joined.

Copper, brass, or iron not galvanized may be prepared to receive solder by cleaning the surfaces and applying the chloride-of-zinc soldering fluid. A stronger joint is assured by tinning the metal before soldering, in which case resin is the proper flux.

35. Tinning.—In copper-bit work, and also in blowpipe work, there is a preliminary operation known as **tinning,** in which the metals to be united are properly prepared for soldering. This operation consists in spreading a thin layer

of solder on the surfaces of the metals and causing it to adhere and make a firm metallic union therewith. Its object is to so prepare the surfaces of the metals that they will readily unite with the melted solder that is applied to them in the process of soldering. All the common metals become tarnished when exposed to the atmosphere, and it is necessary to remove the tarnished surface and thus expose the bare, clean, metal to the influence of the solder; otherwise, the solder will not, under ordinary circumstances, adhere to the metal. In tinning metals, great care should be taken to give the tinning a uniform thickness and have it free from imperfections. Care must always be taken to remove small lumps or ridges of solder in the tinning coat, as they will interfere with the proper closing of joints and seams. Any superfluous solder can be shaken off or wiped off with clean waste or cloth.

36. Tinning a Copper Bit.—Copper bits must be tinned before they can be used for soldering purposes. One method of doing this is to heat the bit until it melts solder (but not red hot), then lay it on a brick or other suitable material, and file the flat sides at the point to a distance of about 1 inch, or as far back as it may be desirable to tin the bit. When thoroughly clean, rub the filed surfaces on a piece of solder over which some pulverized resin has been sprinkled. The hot copper will quickly melt the resin which prevents the copper from tarnishing before the solder melts. The resin also facilitates the adhesion of the solder to the cleaned copper. If the bit is red hot it will oxidize the instant that the file leaves it, and tinning cannot be done with resin as a flux. Another way of tinning a bit that is to be used for soldering, is to rub it, while hot, on a block of sal ammoniac having a few drops of solder spattered over its surface. The sal ammoniac reduces any oxide that may be present on the bit, and the solder adheres to the clean copper instantly on coming in contact with it.

Another quick way is to dip the point of the bit, while hot, in a saturated solution of sal ammoniac and water before

rubbing it on the solder. This, however, tins all four sides which is not always desirable.

When a bit is overheated, the coating of solder, or the tinning, as it is called, is reduced to a yellow powder and is destroyed. The bit must be tinned before it can again be used.

37. Making a Soldered Joint.—In the process of soldering, the parts to be joined are heated by a copper bit, by a blowpipe flame, or by some equivalent means, to the fusing point of the solder.

Solder flows best at high temperatures, provided that the temperature is not so high as to oxidize it, and will flow into a joint until it is chilled; therefore, it will flow farthest when it possesses a large excess of heat above that which is necessary to maintain it in the fluid condition. Soldering should not be done with bits that are barely hot enough to melt the solder, because the solder will unite only at the edges of the metal and will not flow into the joint properly.

The metal to be soldered may be heated by contact with the hot bit, and by moving the bit just fast enough to cause a little melted solder to follow the point. This body of solder increases the area of contact and conducts heat from the bit to the metal with great rapidity. In working with the blowpipe, the necessary heat is applied directly to the metal by the flame. The flame must be handled in a manner that will avoid overheating or oxidizing either the metal or the solder.

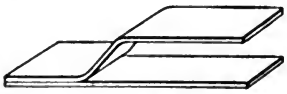

FIG. 28

If two pieces of sheet brass, like those shown in Fig. 28, are to be soldered together, the surfaces to be soldered are first rubbed clean and a little of the soldering fluid is applied with a small brush or a feather. The bit is then heated to the proper temperature, which can be determined by striking it a quick glancing blow with the hand. This removes any dirt and exposes a clean tinned surface. When hot enough, the molten tin on the bit has a streaked appearance when

the hand is brushed over it. With a little experience, the proper temperature can be easily told by this method.

When the bit is properly heated, a drop of solder is melted from the stick with the point of the bit and allowed to fall on one of the fluxed surfaces, and is spread over it with the hot bit, care being taken to get the surface well tinned. The other piece is then prepared in the same way, and both pieces are placed in position and pressed together with the hot bit. The heat from the bit heats the pieces of brass and melts the solder on the surfaces; the bit is then removed and the pieces are held together until the solder has become hard. The soldering fluid that still remains on the pieces must be washed off, so as not to corrode the brass.

This method is generally used for making soldered joints, and the ability to make neat and fast joints is a matter of practice. The method of soldering is varied slightly to suit conditions, as, for instance, when two pieces are laid edge to edge and the molten solder is drawn along by means of the hot copper bit.

Iron articles may be tinned by thoroughly cleaning the surfaces and treating them with chloride of zinc or sal ammoniac before the solder is applied.

38. Soldering Aluminum.—All copper and tin alloys, and, in fact, most metals, have oxides that can readily be dissolved in some flux, thus leaving the surface of the metal clean, so that the solder may adhere to it. The oxide of aluminum, however, is not soluble in any known flux; hence, it is necessary to cover the surface with the melted solder and then rub off the oxide with the point of the copper bit. In this case, the bit does not have to be tinned, but should be rather heavy, so that it will hold a large amount of heat. A good solder for aluminum has the following composition:

	Parts
Aluminum	1
Phosphor tin	1
Zinc	11
Tin	29

In making the solder, the aluminum should be melted first; the zinc should then be added in small pieces, taking care not to solidify the melted aluminum; the tin should then be added in the same way; and last of all, the phosphor tin should be added and the mixture thoroughly stirred with a brass rod. This solder should be made in a graphite crucible. The reason for melting the metals in the order given is that, if the metals with the lower melting point were heated to the melting point of aluminum, they would be partly vaporized, thus destroying the proper proportion of the alloy. When it is desired to solder aluminum, the bit is heated to a red heat, some solder is placed on one of the surfaces to be united, melted with the copper bit, and then the aluminum oxide rubbed from the surface beneath the molten solder until the solder adheres evenly to the entire surface. The surface of the other piece is then treated in the same way, the two pieces placed together, and heated with the copper bit or with a torch until they unite. Considerable skill is required in soldering aluminum, and this skill can be obtained only by practice and by carefully following the directions given.

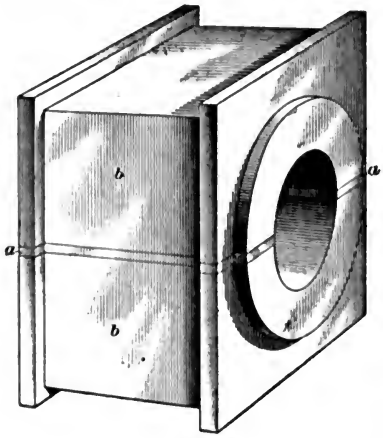

FIG. 29

SWEATING

39. Sweating is a term applied to a process of soldering metals without using a copper bit, the surfaces to be joined being cleaned and tinned with solder and then brought together and heated until the solder flows and unites the pieces, which may be pressed together while cooling. The process of **sweating on,** as it is usually called, is frequently adopted for temporarily holding in place pieces of work to be turned or otherwise finished to shape,

after which the parts may easily be separated by heating and melting the solder that holds them together.

In boring out boxes for bearings, the pieces are sometimes sweated together and then bored and finished. After this they are again heated, in order to melt the solder, and the pieces taken apart. When brass boxes *b*, *b*, Fig. 29, are sweated together, liners *a*, *a* are sometimes placed between them to allow for wear when in service. The faces of the brasses and the liners are planed smooth and rubbed bright. They are then heated in the forge, and, when hot, the brasses are fluxed with sal ammoniac or cleaned with acid, and tinned by the method employed in tinning the copper bit. The liners, if of iron, are fluxed with borax and tinned. The pieces are then put together and heated so as to melt the solder. If they are not heavy enough to make a tight joint, they are weighted down until cold. When the pieces have been bored out and finished in the machine shop, they are melted apart and the liners taken out.

BRAZING

40. Brazing is a process for joining two or more metals by means of a hard solder known as **spelter**, whose temperature of fusion is much higher than that of soft solders, and whose strength is greater. Hard solders are composed of alloys of copper, zinc, tin, silver, etc. that are varied to suit the requirements. A good soft spelter is made with one part of copper and one part of zinc; sixty-five parts of copper and thirty-five parts of zinc make a good spelter for general work; thirteen parts of copper, five parts of zinc, and eighty-two parts of silver make a good spelter for soldering band saws. Coin silver is sometimes used as a brazing solder. These metals are fused together, then filed to a coarse powder, and sometimes made into a paste by the addition of calcined borax and water. Only those metals whose temperature of fusion exceeds that of hard solders, such as iron, copper, and brass, can be brazed. In this class of soldering, the temperature required to fuse the solder is so high that soldering bits cannot be used.

41. Tools and Supplies.—The heat is usually applied to the parts to be brazed, by means of an intensely hot blowpipe flame. Large work, having a considerable weight of metal, may be heated in a forge fire. For brazing collars, etc. on 2- or 3-inch tubing, the fire is arched over with coke, thus making a hot chamber in which the work may be heated uniformly.

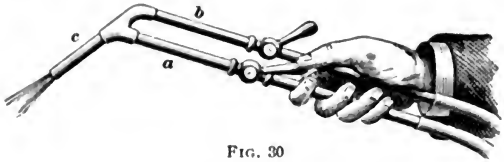

FIG. 30

42. In Fig. 30 is shown a very convenient form of **blowpipe** to be used in connection with a bellows. The blowpipe consists of a gas pipe *a* having a controlling cock attached; an air or blast pipe *b*, also having a controlling cock attached; and an iron pipe nozzle *c* joined by a special casting to the pipes *a* and *b*.

43. In Fig. 31 is shown a form of **blower** suitable for supplying air to the blowpipe. It consists of a single-acting bellows having an air inlet check-valve on the inside of the bottom board *a*, and another on the upper side of the pressure board *b* and within the rubber storage bag *c*, which is enclosed by a cord network to prevent it from bursting.

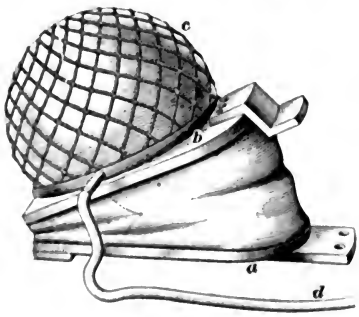

FIG. 31

The bellows is operated as follows: The top board, which is hinged at the lower end and supported by a spring within the bellows, on being pushed down with the foot compresses the air within the bellows and forces a portion of it through the upper check-valve into the rubber bag. When the pressure of the foot is removed from the pressure board, the bellows will again be

filled with air by the spring which raises the pressure board. This operation is continued, thus filling the rubber bag with compressed air, which flows to the blowpipe through the rubber tube *d* when the air cock of the blowpipe is open. The elasticity of the rubber bag serves to equalize the pressure of the blast.

This form of blower is capable of furnishing a strong and nearly continuous blast through a jet $\frac{1}{4}$ inch in diameter.

44. The blowpipe should be connected by rubber tubing to a gas burner or other supply and to the blower, care being taken that the bore of the tubing is large enough to avoid excessive friction.

Air is mixed with the gas before it is consumed, as otherwise the flame is low in temperature and gives off products of combustion that not only tarnish the metal, but also cover it with a coating that keeps the flame from coming in contact with it.

The gas should be turned on first and should be lighted at the jet; air is then admitted gradually until the flame is brought to the proper size and color. If too much gas is admitted, the flame will be yellow and will blacken the work by depositing a film of carbon on it. If too much air is admitted, the flame will be short, ragged, and noisy, and the temperature will be too low to heat the metal properly. The flame is hottest and at its best condition when it burns with a pale-blue or bluish-green color, without any white or yellow parts.

45. Operation of Brazing.—The article to be brazed must be well supported, and the joint should be well bound together with iron wire to prevent the edges from warping out of place when heated. Spelter is placed over the joint or seam in such a manner that when it fuses it will flow into the joint. Powdered borax is then sprinkled over the joint or seam for a flux, and the blowpipe flame is applied chiefly on the thick parts of the metal at first, so as to heat the mass uniformly to the temperature of fusion of the spelter.

The heat of the metal is then increased, care being taken to avoid giving much more heat to the spelter, otherwise it

may be burned or spoiled. As soon as the metal is hot enough, the borax will fuse and flow over the parts; and as the heat rises a little higher, the spelter will melt and flow into the crevice and adhere to the faces of the joint. The spelter will sweat into a crevice for a considerable distance if the metal is clean and is hot enough.

46. The melting point of the spelter and of the metal to which it is applied may not differ more than 300° or 400°; consequently, great care must be exercised to avoid overheating the metal. The heat must be applied uniformly, otherwise the work is liable to warp; and if the flame is directed on one spot too long, a hole is liable to be burned at that point. When brazing metals that have a low melting point, the blowpipe flame should be promptly withdrawn as soon as the spelter flows.

Sometimes the composition of brass tubing and sheet brass is so uneven or the material is so impure that they cannot be brazed satisfactorily. On such material soft solder only can be used.

Brass tubing is very brittle when hot; consequently, it should not be moved until it has cooled. The process of brazing softens the parts that are heated, and these do not return to their original hardness on cooling.

47. Small articles may be heated in a charcoal fire without the blowpipe; a blast, however, may be used if necessary. Large or heavy work may be heated in a forge fire, for which clean coke free from sulphur is commonly used. To braze successfully, three things are required: first, a proper temperature, neither too low nor too high; second, uniform heating; third, proper fluxing.

In selecting the spelter to be used, that which will melt at a temperature lower than the melting point of the metal to be brazed must be chosen.

When brazing pieces to brass tubes that are made with a brazed seam, it is unsafe to use spelter, because there is danger of opening the seam. A more fusible solder, such as silver solder, should be used.

48. Types of Brazed Joints.—In Fig. 32 is shown a number of joints, suitable for different classes of work. The joint shown in Fig 32 (*a*) is called a **butt joint**; the lumps of spelter at *a* are placed in position ready for fusion. The strength of this joint is slight, depending on the area of the surfaces that are united by the spelter. The strength is greatly increased by **lapping** the plates, as in Fig. 32 (*b*). An equal amount of strength may be secured and the appearance greatly improved by **beveling**, or **splaying**, the edges.

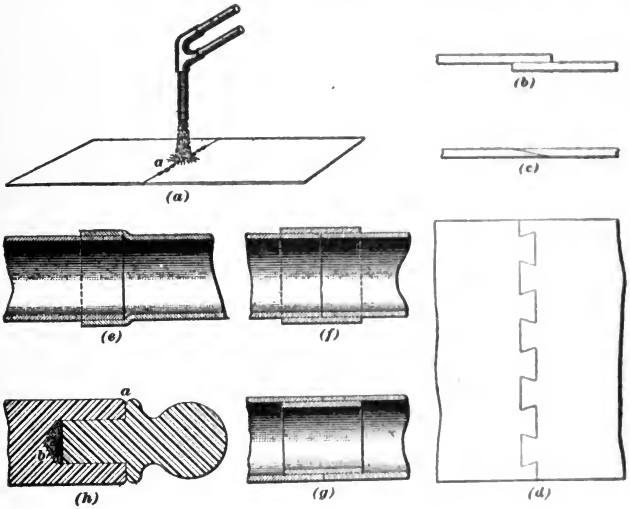

FIG. 32

as in Fig. 32 (*c*), provided that the plates are thick enough to permit the beveling to be extended to a sufficient width. The strongest joint for sheet metals is made by **dovetailing** the edges together before brazing, as in Fig. 32 (*d*).

Thin tubing may be joined by a **slip-joint**, as shown in Fig. 32 (*e*), by first annealing one of the ends and forming it into a socket. The end is flared out by means of a drift pin or plug, care being taken not to split the pipe, after which the metal is expanded by hammering until the other end will enter properly.

Circular butt joints may be strengthened by means of a band put on externally, as in Fig. 32 (*f*); or by an internal ferrule, as in Fig. 32 (*g*).

A knob brazed to the end of a rod is shown in Fig. 32 (*h*). To do this job properly, the spelter must flow into the socket and secure the shank of the knob. A good joint cannot be made by merely securing the edges at *a*. The rod should be held vertically in a suitable fire or flame until the socket is well heated, at the same time heating the knob also. Borax and spelter are then placed in the socket, and as soon as the spelter is melted, the shank of the knob should be inserted and pressed into place. The spelter will flow outwards by being displaced by the shank, filling the entire joint; or the space *b* at the end of the shank may be filled with spelter, as shown, and the knob inserted. If the knob and socket are then heated in an inverted position, the spelter in *b* will flow around the shank and sweat down to the rim *a*.

FIG. 33

49. Brazing the Joint of a Pair of Tweezers.—The brazing of a pair of tweezers, shown in Fig. 33, is a good example of flat brazing. The surfaces to be brazed are cleaned, then some of the spelter is applied to each surface, and the pieces tied together with a fine iron wire and heated sufficiently to melt the spelter. The heat may be applied with a blowpipe or by holding the pieces in a pair of hot tongs. When the spelter is melted, the piece is cooled and the iron wire is taken off. If the pieces are clamped in hot tongs, the iron wire may be omitted, the pieces being placed in their proper position and held there by the tongs.

50. Brazing Tempered-Steel Articles.—In brazing a tempered-steel article, the heating should be done carefully, so as to draw the temper as little as possible. The selection of the proper spelter or solder is also important. If an article tempered to a dark-blue color is to be brazed without

spoiling the temper, a spelter that will melt below 600° must be used. As this spelter is not as strong as the harder kinds, the brazed surfaces must be larger, so as to make the joint equally strong.

When brazing steel articles that are to be tempered, the pieces are sometimes held together by snapping a small metal clip over the joint, to retain the pieces in their proper position. This clip is left on after the brazing is completed and while the piece is being tempered, provided that the tempering is done after the brazing. By this means, the pieces may be brazed with hard solder or silver, and subsequently tempered, the clip or clamp being removed after the work is finished.

51. Butt Brazing.—If two thin pieces are to be butt-brazed—that is, brazed end to end, as in making a butt weld—the pieces must be held in position in a bench vise, hand vise, or clamp, and the heat applied with a pair of tongs or with a blowpipe. The surfaces to be brazed are fluxed with borax and then clamped in position, and a little spelter is sprinkled on the side over the joint. Heat is then applied by means of a blowpipe, a Bunsen burner, or a hot iron, until the pieces are hot enough to melt the spelter, which will then flow into the joint. By giving one of the pieces a slight tap on the end, the pieces are brought tightly together. They are then allowed to cool and the remaining spelter is scraped off.

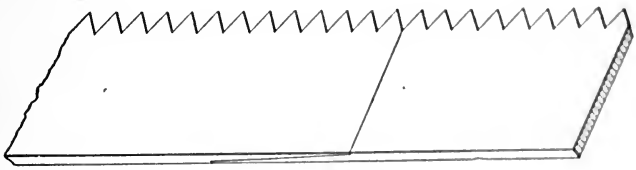

FIG. 34

52. Lap Brazing.—Band saws are always lap-brazed, the two ends being filed to make an accurate joint. Silver solder is generally used, being applied between the two surfaces; or the surfaces may be coated with borax and the solder allowed to flow into the joint. Fig. 34 shows the two

ends of a band saw filed for brazing. The pieces are clamped together or tied with a wire after having been fluxed. The spelter is laid over the joint, or it may be put between the pieces. When the heat is applied, the spelter melts, and the pieces must be squeezed tightly together. Silver coins contain 10 per cent. of copper, and make a good hard solder. The coin is pounded out until thin, and then clamped between the surfaces to be brazed and the heat applied.

53. Brazing Cast Iron.—Cast iron contains carbon, which prevents most metals from adhering to its surface. This difficulty, however, is overcome by first coating the surface to be brazed with a metallic oxide, usually oxide of copper made into the consistency of varnish and applied to the surface with a brush. The metallic oxide when heated acts as a reducer of the carbon on the surface of the cast iron to be brazed; it really decarbonizes the surface of the metal for a short distance below it. The removal of the carbon leaves the surface of the metal with an open structure, since the spaces that formerly contained carbon are left empty. After coating with oxide of copper, the surface of the metal to be brazed is brought to a red heat by means of gas torches, or blast lamps. The oxide of copper is reduced to metallic copper and unites with the metal at the surface of the break After the metal is brought to the required temperature, about 1,800° F., ordinary brass filings are put into the fracture and melted, as in the ordinary brazing process. The fact that the carbon is extracted from the iron for a short distance below the surface allows the brazing material to secure a firm grip on the surface of the metal, and results in very strong brazed joints. A brazing solder as strong or stronger than cast iron is usually employed; hence, the joint is as strong as the original casting. The only difficulty with this brazing process is that the heating of the iron expands it permanently; hence, in some cases, finished machine parts united in this way must afterwards be brought to the proper size.

BENDING BRASS AND COPPER PIPE

54. Annealing Brass and Copper Pipe.—Whenever a piece of brass or copper pipe or tubing is to be bent or shaped, it must first be annealed, which should make it so soft that the smaller sizes can be bent by hand. This **annealing,** or softening, is done by heating the metal evenly to a dull-red heat and then plunging it into cold water. In this process, care must be taken not to overheat brass.

55. Bending Small Tubing.—The simplest way to make a bend in a small tube is to turn a block of hardwood to the radius of the desired curve and then bend the pipe about the block. When the radius is small, this may be done as shown in Fig. 35, *a* being the block about which the pipe is to be bent and *d* a square block of the same thickness, clamped in a vise *b*, *b*, so as to hold the end of the pipe during the bending. After the two blocks *a*, *d* are so placed that the pipe can just be slipped between them, the end of the pipe *c* is slipped through to the point where it is desired to form the bend, and the other end is carried around, as indicated by the dotted lines, to the desired angle. If a greater bend than 180° is made, it is sometimes difficult to remove the wooden block from the tubing.

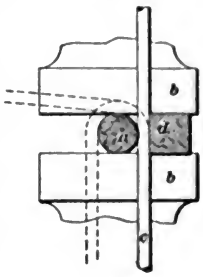

FIG. 35

In some cases, a groove is turned about the block *a*, the radius of the groove being equal to the radius of the outside of the pipe, so that the pipe will bed itself in the groove while being bent. This aids in keeping the pipe from flattening. This simple device will serve to bend pipe up to $\frac{3}{4}$ inch in diameter, and is sometimes used for larger sizes.

56. Support of Tubing While It Is Being Bent. In order to prevent the tubing from kinking or flattening while being bent, it is necessary to fill the inside with some substance. Sometimes, when there is a thread on each end

of the tube, it is filled with sand and a cap screwed on each end; or the tube may be filled with water and the ends capped. When water is used as a filling material, care must be taken to fill the pipe completely, for if it contains any air the latter may be compressed and allow the pipe to flatten at some point. The more common practice is to fill the tube with melted resin and allow this to harden. During bending, the resin will be pulverized, but it will prevent the

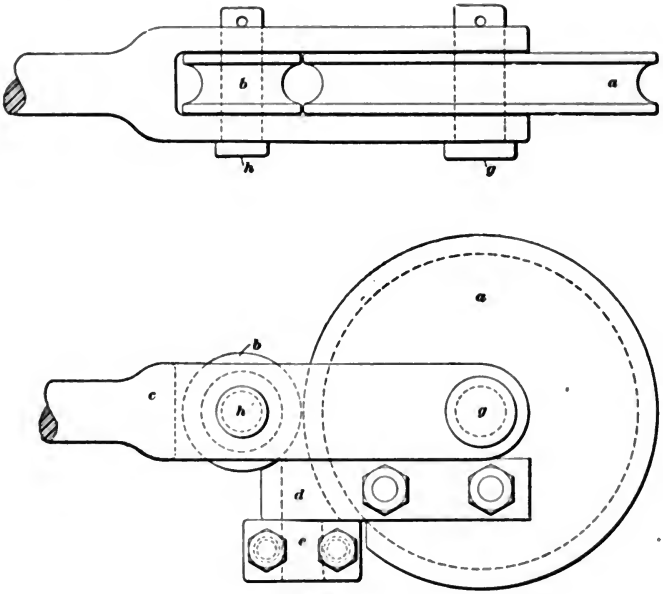

FIG. 36

tube from flattening. After the bend is made, the resin can easily be melted and run out. Pipes less than $\frac{5}{8}$ inch in diameter are bent without filling. Occasionally, if the metal is thick, it is possible to bend larger pipes in this manner, but no risk should be taken if a good bend is required.

57. Bending Large Tubing.—When it is necessary to bend large tubes, some special device must be used. The one shown in Fig. 36 has been found very convenient. This

consists of two wheels *a* and *b* arranged as shown. The wheel *a* is clamped in a vise or by means of a special clamp. If it is required to bend greater angles than 90°, the vise or clamp must be so located that the lever *c* can make the desired portion of a revolution. The lever *c*, which is forked at the end and carries the wheel *b*, is pivoted to the pin *g* passing through the center of the wheel *a*. Attached permanently to the wheel *a* is a clamp or yoke *d* that is so arranged as to hold the tube in its proper position. The radius of the wheel *a* must be equal to that of the desired curve, and the outside of each wheel is turned to such a form that when the wheels are in position they barely allow the tube to pass between them, thus preventing any tendency to flatten or buckle on the part of the metal that is being bent. The clamp *e* is placed on the tube to be bent, so that it will locate the point at which the bend is to begin, on a straight line between the centers of the wheels *a*, *b*. After the tube is in place, the lever *c* is carried around the wheel *a* and the pipe formed as desired. To remove the bent tube, the pin *h* may be removed to allow the wheel *b* to be taken out; or the pin *g* may be removed, thus allowing the entire lever *c* to be taken away from the wheel *a*. The radius of the larger wheel *a* is made from $\frac{1}{32}$ to $\frac{1}{16}$ inch less than that of the corresponding radius of the pipe, to allow for the spring when the pipe is released. The wheel *b* is made as small as the stresses on it will permit.

ESTIMATING STOCK

58. The amount of stock necessary for any piece of work can be calculated. Nearly all complicated forgings can be separated into several simple parts and the lengths of these measured and their weights calculated. But generally such estimates are made by direct measurements and the use of Tables II, III, IV, and V. The lengths are found by means of a templet, string, soft wire, dividers, or wheel. The line measured in curved work, to find the amount of straight stock necessary, is a line midway between the inner and the outer curves, as this is neither shortened nor lengthened in

the bending operations. The wire or string is laid on this line of the drawing, templet, or work that is to be duplicated, and is then straightened out on the stock. Likewise, the dividers may be stepped along this line and the same number of steps repeated on the stock.

While, theoretically, the finished work contains the same weight of stock as the piece started with, there is a slight loss on account of scale and burning. Additional allowance must be made in cutting stock for the lap in welds. This extra length varies with the area of the piece and the style of weld, and ranges from $\frac{1}{8}$ inch to 1 inch. Small stock usually requires a greater extra length than heavy stock.

USEFUL TABLES

The temperatures given in Table I have been adopted as standards in work conducted at the plant of the Bethlehem Steel Company, South Bethlehem, Pa., by Messrs. Taylor and White, who have carried on quite extensive experiments in regard to temperatures.

TABLE I

TEMPERATURES CORRESPONDING TO VARIOUS COLORS

Color	Temperature Degrees F.
Dark blood red, black red	990
Dark red, blood red, low red	1,050
Dark cherry red	1,175
Medium cherry red	1,250
Cherry, full red	1,375
Light cherry red, bright cherry red, scaling heat,* light red	1,550
Salmon, orange, free-scaling heat	1,650
Light salmon, light orange	1,725
Yellow	1,825
Light yellow	1,975
White	2,200

In making calculations of stock, tables giving the weight of various materials will be found very useful. Table II gives the weight of square and round wrought-iron bars; Table III, the weight of flat bar iron; Table IV, the weight of sheet iron; and Table V, the weights of different metals in ordinary use. Table VI gives the weight, volume, and measure of water; while Table VII gives the sizes of rivets and the weight per hundred.

*Heat at which scale forms and adheres, i. e., does not fall away from the piece when allowed to cool in air.

TABLE II

WEIGHT OF SQUARE AND ROUND WROUGHT IRON, 1 FOOT IN LENGTH

Side or Diameter Inches	Weight of Square Iron Pounds	Weight of Round Iron Pounds	Side or Diameter Inches	Weight of Square Iron Pounds	Weight of Round Iron Pounds
1/16	.013	.010	4 3/8	64.700	50.810
1/8	.053	.041	1/2	68.450	53.760
3/16	.118	.093	5/8	72.300	56.790
1/4	.211	.165	3/4	76.260	59.900
5/16	.475	.373	7/8	80.330	63.090
1/2	.845	.663	5	84.480	66.350
5/8	1.320	1.043	1/8	88.780	69.730
3/4	1.901	1.493	1/4	93.170	73.170
7/8	2.588	2.032	3/8	97.660	76.700
1	3.380	2.654	1/2	102.240	80.300
1/8	4.278	3.359	5/8	106.950	84.000
1/4	5.280	4.147	3/4	111.750	87.770
3/8	6.390	5.019	7/8	116.670	91.630
1/2	7.604	5.972	6	121.660	95.550
5/8	8.926	7.010	1/4	132.040	103.700
3/4	10.352	8.128	1/2	142.820	112.160
7/8	11.883	9.333	3/4	154.010	120.960
2	13.520	10.620	7	165.630	130.050
1/8	15.263	11.990	1/4	177.670	139.540
1/4	17.112	13.440	1/2	190.140	149.330
3/8	19.066	14.980	3/4	203.020	159.460
1/2	21.120	16.590	8	216.330	169.860
5/8	23.292	18.290	1/4	230.060	180.700
3/4	25.560	20.080	1/2	244.220	191.810
7/8	27.939	21.940	3/4	258.800	203.260
3	30.416	23.890	9	273.790	215.040
1/8	33.010	25.930	1/4	289.220	227.150
1/4	35.704	28.040	1/2	305.060	239.600
3/8	38.500	30.240	3/4		252.380
1/2	41.408	32.510	10		265.400
5/8	44.420	34.890	1/4		278.920
3/4	47.534	37.330	1/2		292.690
7/8	50.760	39.860	3/4		306.800
4	54.080	42.460	11		321.220
1/8	57.510	45.170	1/4		336.000
1/4	61.050	47.950	1/2		351.100

TABLE III

WEIGHT OF A LINEAL FOOT OF FLAT BAR IRON, IN POUNDS

Breadth Inches	Thickness, in Fractions of Inches								
	$\frac{1}{4}$	$\frac{5}{16}$	$\frac{3}{8}$	$\frac{7}{16}$	$\frac{1}{2}$	$\frac{5}{8}$	$\frac{3}{4}$	$\frac{7}{8}$	1
	Weight, in Pounds								
1	.83	1.04	1.25	1.46	1.67	2.08	2.50	2.92	3.34
$1\frac{1}{8}$	.93	1.17	1.40	1.64	1.87	2.34	2.81	3.28	3.75
$1\frac{1}{4}$	1.04	1.30	1.56	1.82	2.08	2.60	3.13	3.65	4.17
$1\frac{3}{8}$	1.14	1.43	1.72	2.00	2.29	2.87	3.44	4.01	4.59
$1\frac{1}{2}$	1.25	1.56	1.87	2.19	2.50	3.13	3.75	4.38	5.00
$1\frac{5}{8}$	1.35	1.69	2.03	2.37	2.71	3.39	4.07	4.70	5.43
$1\frac{3}{4}$	1.46	1.82	2.19	2.55	2.92	3.65	4.38	5.11	5.84
$1\frac{7}{8}$	1.56	1.95	2.34	2.74	3.13	3.92	4.69	5.47	6.26
2	1.67	2.08	2.50	2.92	3.34	4.17	5.01	5.86	6.68
$2\frac{1}{8}$	1.77	2.21	2.66	3.10	3.55	4.43	5.32	6.21	7.10
$2\frac{1}{4}$	1.87	2.34	2.81	3.28	3.76	4.69	5.63	6.57	7.52
$2\frac{3}{8}$	1.98	2.47	2.97	3.47	3.96	4.95	5.95	6.94	7.93
$2\frac{1}{2}$	2.08	2.60	3.13	3.65	4.17	5.21	6.26	7.30	8.35
$2\frac{5}{8}$	2.19	2.74	3.28	3.83	4.38	5.47	6.57	7.67	8.77
$2\frac{3}{4}$	2.29	2.87	3.44	4.01	4.59	5.74	6.88	8.03	9.18
$2\frac{7}{8}$	2.40	3.00	3.60	4.20	4.80	6.00	7.20	8.40	9.60
3	2.50	3.13	3.75	4.38	5.01	6.26	7.51	8.76	10.02
$3\frac{1}{4}$	2.71	3.39	4.07	4.74	5.43	6.78	8.14	9.49	10.86
$3\frac{1}{2}$	2.92	3.65	4.38	5.11	5.84	7.30	8.76	10.23	11.69
$3\frac{3}{4}$	3.13	3.91	4.68	5.47	6.26	7.82	9.39	10.95	12.52
4	3.34	4.17	5.00	5.84	6.68	8.35	10.02	11.69	13.36
$4\frac{1}{4}$	3.54	4.43	5.32	6.21	7.09	8.87	10.64	12.42	14.19
$4\frac{1}{2}$	3.75	4.69	5.63	6.57	7.51	9.39	11.27	13.15	15.03
$4\frac{3}{4}$	4.06	4.95	5.94	6.94	7.93	9.91	11.89	13.88	15.86
5	4.17	5.21	6.26	7.30	8.35	10.44	12.52	14.61	16.70
$5\frac{1}{4}$	4.38	5.47	6.57	7.67	8.76	10.96	13.14	15.34	17.53
$5\frac{1}{2}$	4.59	5.73	6.88	8.03	9.18	11.48	13.77	16.07	18.37
$5\frac{3}{4}$	4.80	6.00	7.20	8.40	9.60	12.00	14.40	16.80	19.20
6	5.01	6.25	7.51	8.76	10.02	12.53	15.03	17.53	20.05

TABLE IV

WEIGHT OF SHEET AND PLATE IRON

Thickness		Weight of Square Foot Pounds	Thickness		Weight of Square Foot Pounds
B. W. Gauge	Part of an Inch		B. W. Gauge	Part of an Inch	
36	.00400	.126	11	.12000	4.480
35	.00500	.202		$\frac{1}{8}$ or .12500	5.054
34	.00700	.283	10	.13400	5.426
33	.00800	.322	9	.14800	5.980
32	.00900	.364		$\frac{5}{32}$ or .15620	6.305
31	.01000	.405	8	.16500	6.605
30	.01200	.485	7	.18000	7.270
29	.01300	.526		$\frac{3}{16}$ or .18750	7.578
28	.01400	.594	6	.20300	8.005
27	.01600	.677		$\frac{7}{32}$ or .21870	8.790
26	.01800	.755	5	.22000	8.912
25	.02000	.811	4	.23800	9.620
24	.02200	.912		$\frac{1}{4}$ or .25000	10.090
23	.02500	1.078	3	.25900	10.370
22	.02800	1.137		$\frac{9}{32}$ or .28120	11.380
	$\frac{1}{32}$ or .03125	1.259	2	.28400	11.525
21	.03200	1.310	1	.30000	12.150
20	.03500	1.416		$\frac{5}{16}$ or .31250	12.580
19	.04200	1.695	0	.34000	13.750
18	.04900	1.975		$\frac{11}{32}$ or .34370	13.875
17	.05800	2.350		$\frac{3}{8}$ or .37500	15.100
16	.06500	2.637	00	.38000	15.260
	$\frac{1}{16}$ or .06250	2.518		$\frac{13}{32}$ or .40620	16.320
15	.07200	2.920	000	.42500	17.125
14	.08300	3.350		$\frac{7}{16}$ or .43750	17.650
	$\frac{3}{32}$ or .09370	3.780	0000	.45400	18.300
13	.09500	3.850		$\frac{15}{32}$ or .46070	18.900
12	.10900	4.400		$\frac{1}{2}$ or .50000	20.000

TABLE V

WEIGHTS OF VARIOUS METALS IN ORDINARY USE

Metals	Weight of a Cubic Foot Pounds	Weight of a Cubic Inch Pounds
Brass	488.75	.282
Brass, sheets	513.60	.297
Brass, wire	524.16	.303
Copper, cast	547.25	.317
Copper, plates	543.62	.316
Iron, cast	450.43	.260
Iron, plates	481.50	.278
Iron, wrought bars	486.75	.281
Lead, cast	709.50	.410
Lead, rolled	711.75	.411
Mercury, 60° F.	848.74	.491
Steel, plates	490.00	.282
Steel, soft	489.56	.283
Tin	455.68	.263
Zinc, cast	428.81	.248
Zinc, rolled	449.28	.260

TABLE VI

WEIGHT, VOLUME, AND MEASURE OF WATER

Weight	Volume	Measure
$8\frac{1}{3}$ pounds	231 cubic inches	1 gallon
$62\frac{1}{2}$ pounds	1 cubic foot	$7\frac{1}{2}$ gallons
1 pound	27.8 cubic inches	1.04 pints

TABLE VII

SIZES OF RIVETS AND WEIGHTS PER 100

Length Under Head Inches	Diameter, in Inches							
	$\frac{3}{8}$	$\frac{1}{2}$	$\frac{5}{8}$	$\frac{3}{4}$	$\frac{7}{8}$	1	$1\frac{1}{8}$	$1\frac{1}{4}$
	Weights, in Pounds							
$1\frac{1}{4}$	5.4	12.6	21.5	28.7	43.1	65.3	91.5	123
$1\frac{1}{2}$	6.2	13.9	23.7	31.8	47.3	70.7	98.4	133
$1\frac{3}{4}$	6.9	15.3	25.8	34.9	51.4	76.2	105.0	142
2	7.7	16.6	27.9	37.9	55.6	81.6	112.0	150
$2\frac{1}{4}$	8.5	18.0	30.0	41.0	59.8	87.1	119.0	159
$2\frac{1}{2}$	9.2	19.4	32.2	44.1	63.0	92.5	126.0	167
$2\frac{3}{4}$	10.0	20.7	34.3	47.1	68.1	98.0	133.0	176
3	10.8	22.1	36.4	50.2	72.3	103.0	140.0	184
$3\frac{1}{4}$	11.5	23.5	38.6	53.3	76.5	109.0	147.0	193
$3\frac{1}{2}$	12.3	24.8	40.7	56.4	80.7	114.0	154.0	201
$3\frac{3}{4}$	13.1	26.2	42.8	59.4	84.8	120.0	161.0	210
4	13.8	27.5	45.0	62.5	89.0	125.0	167.0	218
$4\frac{1}{4}$	14.6	28.9	47.1	65.6	93.2	131.0	174.0	227
$4\frac{1}{2}$	15.4	30.3	49.2	68.6	97.4	136.0	181.0	236
$4\frac{3}{4}$	16.2	31.6	51.4	71.7	102.0	142.0	188.0	244
5	16.9	33.0	53.5	74.8	106.0	147.0	195.0	253
$5\frac{1}{4}$	17.7	34.4	55.6	77.8	110.0	153.0	202.0	261
$5\frac{1}{2}$	18.4	35.7	57.7	80.9	114.0	158.0	209.0	270
$5\frac{3}{4}$	19.2	37.1	59.9	84.0	118.0	163.0	216.0	278
6	20.0	38.5	62.0	87.0	122.0	169.0	223.0	287
$6\frac{1}{2}$	21.5	41.2	66.3	93.2	131.0	180.0	236.0	304
7	23.0	43.9	70.5	99.3	139.0	191.0	250.0	321
$7\frac{1}{2}$	24.6	46.6	74.8	106.0	147.0	202.0	264.0	338
8	26.1	49.4	79.0	112.0	156.0	213.0	278.0	355
$8\frac{1}{2}$	27.6	52.1	83.3	118.0	164.0	223.0	292.0	372
9	29.2	54.8	87.6	124.0	173.0	234.0	306.0	389
$9\frac{1}{2}$	30.7	57.6	91.8	130.0	181.0	245.0	319.0	406
10	32.2	60.3	96.1	136.0	189.0	256.0	333.0	423
$10\frac{1}{2}$	33.8	63.0	101.0	142.0	198.0	267.0	347.0	440
11	35.3	65.7	105.0	148.0	206.0	278.0	361.0	457
$11\frac{1}{2}$	36.8	68.5	109.0	155.0	214.0	289.0	375.0	474
12	38.4	71.2	113.0	161.0	223.0	300.0	388.0	491

A SERIES OF QUESTIONS AND EXAMPLES

Relating to the Subjects Treated of in This Volume

It will be noticed that the various Examination Questions that follow have been given the same section numbers as the Instruction Papers to which they refer. No attempt should be made to answer any of the questions or to solve any of the examples until the Instruction Paper having the same section number has been carefully studied.

MACHINE MOLDING.

EXAMINATION QUESTIONS.

(1) What is the pressure of the compressed air ordinarily used for operating pneumatic rammers?

(2) How many blows per minute can be struck by a small pneumatic rammer?

(3) Why is ramming done with a pneumatic rammer usually more even than that done by hand?

(4) What classes of work can be made to advantage on a molding machine of the presser type, such as is sometimes called a squeezer?

(5) What is the advantage of placing all of the mechanism of a molding machine above the flask and the sand?

(6) On what does the capacity of a molding machine depend?

(7) What is the advantage of having a molding machine portable, that is, placing it on wheels so that it can be moved along the foundry floor?

(8) Describe briefly the action of a machine intended for drawing patterns from a mold in which the pattern is held by means of a vacuum cup.

(9) What is a stripping-plate molding machine?

(10) In the case of a molding machine that compresses the sand over the pattern, why is the under side of the presser head frequently made to conform to the shape of the pattern?

(11) What is the object of the vibrator frame that is attached to the match carrying the patterns in some molding machines?

(12) Describe briefly the making of a mold on an automatic molding machine.

(13) Describe an arrangement for molding circular forms, such as sheaves, by means of a stripping plate.

(14) Why are wooden match boards not used as much as composition match boards?

(15) What are the objections to a plaster-of-Paris match board?

(16) What are the advantages of a match board made from sand, boiled linseed oil, and litharge?

(17) When a great many small castings, exactly alike, are required, how may the pattern be arranged so as to produce a great number with the least amount of work for the molder?

(18) Describe the process of molding a gear on a gear-molding machine.

(19) Describe briefly a machine for molding curved pipes.

(20) How may castings, such as plowshares, be molded without making separate copes and drags for the molds?

FOUNDRY APPLIANCES.

(PART 1.)

EXAMINATION QUESTIONS.

(1) What points should be taken into consideration when selecting the site for a foundry?

(2) Is it always good practice to provide ground in connection with a foundry upon which to dump refuse, such as slag, burned sand, etc.? Give reasons.

(3) What provisions should be made for lighting a foundry both by means of natural and artificial light?

(4) What buildings or departments are included in a large modern foundry plant?

(5) (*a*) What is the purpose of a stock yard in connection with a foundry? (*b*) If an elevated structure is used in the stock yard, what material should be stored on the upper level and what on the lower level?

(6) What are the advantages of locating the cupolas at the center of one side of the melting floor?

(7) What two styles of machines are used for furnishing blast to a cupola?

(8) In a case where the tuyeres of a cupola become slightly clogged, which style of machine for furnishing blast would be preferable?

(9) (*a*) In the case of a traveling crane having considerable span, why is it important that the power for moving the crane along the runways should be applied to the operating shaft at or near the middle of the bridge of the crane?

(*b*) Why is it best to have a heavy load suspended near the middle of the crane, instead of at either end, while the crane is carrying it along the length of the foundry?

(10) (*a*) What is a jib crane? (*b*) For what are jib cranes used?

(11) What are some of the advantages of air or pneumatic hoists?

(12) What is necessary in a complete system for preparing and distributing molding sand?

(13) Why are steel ropes or chains not suitable for operating conveyers for handling molding sand?

(14) Describe a system of sand conveyer that is suitable for conveying molding sand from the place where it is prepared to the various molding machines.

(15) Describe one form of machine for sifting sand.

(16) (*a*) What is a magnetic separator? (*b*) For what is a magnetic separator usually employed in a brass foundry? (*c*) For what is a magnetic separator usually employed in an iron foundry?

(17) Describe one form of sand mixer.

(18) Describe one form of sand elevator.

(19) For what class of molds are mold conveyers adapted?

(20) What is the advantage of having double elevators, the two cages being balanced against each other?

FOUNDRY APPLIANCES.

(PART 2.)

EXAMINATION QUESTIONS.

(1) (*a*) In selecting a flask for making a given casting, what must be considered in regard to the amount of molding sand required? (*b*) Why should flasks be made as light in weight as is possible without impairing their strength or stiffness?

(2) Why are iron flasks necessary in making steel castings?

(3) (*a*) If a large number of heavy castings is required from a given pattern, should loam or dry-sand molds be used? (*b*) Give reasons.

(4) Why is it that, as a rule, large flasks cannot be made interchangeable?

(5) When flasks are not made interchangeable, how are the pins frequently arranged so as to insure an accurate fit between the pins and the sockets, or notches, into which they fit?

(6) Why are cross-bars introduced into the cope portion of large flasks?

(7) What is the advantage of placing the top edge of the cross-bars 1 inch or more below the top edge of the flask?

(8) In bracing between long iron cross-bars in flasks, why is it better to use cast-iron braces bolted in place than to use wooden braces driven in place and held by friction?

(9) What is a snap flask?

(10) (*a*) How many mold boards does each molder require when making one style of small molds? (*b*) How many bottom boards does he require under the same circumstances?

(11) Why should the core plates used for drying cores in halves have true plane surfaces?

(12) In the style of core oven in which the cores are placed on racks that swing out of the oven to put in or remove cores, how is the oven closed when the rack is swung out?

(13) Give a core mixture suitable for use in a core machine.

(14) Describe one machine for grinding rosin.

(15) Describe the pneumatic chipping hammer.

(16) What two classes of machines are used for removing gates and sprues from brass castings?

(17) What is a tumbling barrel?

(18) What is the object of placing iron star castings in tumbling barrels?

(19) What is the advantage of using exhaust tumbling barrels?

(20) Describe the method of cleaning castings by means of the sand blast.

(21) How can the man operating the sand-blast cleaning apparatus be protected from inhaling the sand?

(22) What is a cinder mill?

MALLEABLE CASTING.

(PART 1.)

EXAMINATION QUESTIONS.

(1) In what respect does a malleable casting differ from an ordinary casting ?

(2) What is the tensile strength of good malleable iron ?

(3) If it is desired to produce a white casting of moderate thickness, should it be poured from comparatively dull iron or from very hot iron; that is, which iron will chill the best ?

(4) What allowance must be made in the patterns for malleable castings in order to compensate for the shrinkage of the hard castings ?

(5) What are the chemical elements contained in malleable cast iron ?

(6) In what form does carbon exist in the white castings for malleable work before annealing ?

(7) In what form does the carbon exist in the malleable castings after annealing ?

(8) (*a*) What is ferrosilicon ? (*b*) For what purposes is ferrosilicon used in malleable work ?

(9) What two classes of scrap iron are produced in the malleable foundry ?

(10) Describe briefly the method used in calculating the proportions of the mixture for malleable castings in order to

obtain the desired amount of each element from the scrap and grades of pig iron on hand.

(11) For what classes of malleable work is the cupola process adapted?

(12) (*a*) What are the advantages of the cupola process for malleable work? (*b*) What are the disadvantages of the cupola process for malleable work?

(13) What are the advantages of the coal-furnace, or air-furnace, process as compared with the cupola process?

(14) What are the disadvantages of the coal-furnace, or air-furnace, process as compared with the cupola process?

(15) Describe the preparation of the bottom of a coal, or air, furnace.

(16) Describe the method of charging a coal, or air, furnace.

(17) What kind of coal should be used in firing a coal furnace?

(18) Describe the proper method of firing a coal furnace.

(19) Describe the making of a test plug, including the obtaining of metal from the bath.

(20) What is the advantage of rabbling a charge in a coal, or air, furnace while it is being melted?

MALLEABLE CASTING.

(PART 2.)

EXAMINATION QUESTIONS.

(1) What is a regenerative furnace?

(2) Describe the manner in which the air and gas are heated in a regenerative furnace.

(3) What is the approximate temperature of the heated gases, as they leave the regenerative furnace, before they enter the checkerwork?

(4) What kind of brick should be used for all the parts of the interior lining of a regenerative malleable-iron furnace above the checkerwork?

(5) Describe the making of the bottom in an open-hearth furnace.

(6) Why is it better before firing a furnace to build up the bottom a few inches at a time rather than to build it up all at once?

(7) Describe the charging of an open-hearth furnace, including a description of the tools used.

(8) What is the advantage of having two or more tapping spouts arranged at different heights?

(9) In the tilting open-hearth furnace, is the hotter or colder portion of the bath of iron poured first?

(10) What are the fuels used in the open-hearth furnace?

(11) When natural gas is used as a fuel in the open-hearth furnace, why is it the usual practice to preheat the air only?

(12) When oil is burned in an open-hearth furnace, how is it usually introduced into the furnace?

(13) Why is hydrogen not a desirable constituent of producer gas, especially when present in large quantities?

(14) (*a*) How is the soot that accumulates in the large flues that conduct the producer gas from the producers to the furnaces disposed of? (*b*) What provision must be made in constructing the flues to enable the soot to be disposed of?

(15) Why is it very important that the charge of iron melted at one heat be removed as quickly as possible when tapping the furnace, especially when the iron is carried away in hand ladles?

(16) How are the hard malleable castings usually cleaned?

(17) Describe the sand-blast method for cleaning castings.

(18) When hydrofluoric acid is used as a pickling solution, how does it remove the sand from the castings?

(19) When sulphuric acid is used as a pickling solution, how does it remove the sand from the castings?

MALLEABLE CASTING.

(PART 3.)

EXAMINATION QUESTIONS.

(1) What is the object of packing castings in some suitable material during the annealing process?

(2) If castings come from the annealing oven without being fully annealed, what should be done with them? Answer fully.

(3) What changes does the carbon in the white castings undergo during the annealing process? Answer fully, stating whether the carbon in the annealed castings is uniform throughout or whether it varies.

(4) If it is necessary to ship castings at once so that there is not time to pack them and treat them in the ordinary annealing furnaces, how may a quick anneal, suitable for some work, be made?

(5) (*a*) What is the material generally used for packing malleable castings during the annealing process in the case of iron that was melted in a reverberatory or air furnace? (*b*) What is the material used for packing malleable castings during the annealing process in the case of castings the iron for which was melted in a cupola?

(6) If any molding sand were allowed to remain on the castings when they are packed in the annealing pots, what would be the result?

(7) Why is the scale used as packing material frequently sprinkled with a weak solution of sal ammoniac after the heat?

(8) Describe the ordinary type of annealing pot used for annealing malleable castings.

(9) What is the disadvantage of covering the top of the annealing pots with mud?

(10) In packing delicate castings in annealing pots, in what part of the pot should they be placed?

(11) Why can the interior portions of an annealing oven be built of much cheaper material than that used in the melting furnace?

(12) What fuels may be used for heating annealing ovens?

(13) How is natural gas sometimes burned in the annealing oven in such a manner as to need no outside fireplace or combustion chamber?

(14) How are the annealing pots placed in the annealing oven or withdrawn from the same?

(15) When annealing air-furnace iron, what should be the temperature of the annealing oven?

(16) After the scale used for packing material has been removed from the pots, how is it treated for use in packing the next set of pots?

(17) How can very light castings that are to be polished or plated be polished while being tumbled?

(18) Why do emery wheels that are from medium to soft in grade give better results than hard wheels when grinding malleable castings?

(19) What equipment is necessary in the chipping or finishing department of an ordinary malleable-iron works?

(20) Describe a class of annealing ovens in which the charging can be done by traveling cranes instead of the ordinary trucks.

BRASS FOUNDING.

EXAMINATION QUESTIONS.

(1) Why is it necessary to use a finer grade of sand for molds intended for brass castings than for those intended for iron castings?

(2) Under what circumstances does it become necessary to use dry-sand or loam molds for brass or bronze castings?

(3) (*a*) What are the objections to using ordinary parting sand for molds intended for brass castings? (*b*) What materials are used for parting the cope and nowel portions of a mold intended for brass work?

(4) How are brass castings usually cleaned?

(5) Describe a simple furnace for melting brass in crucibles.

(6) When a cupola is used for melting alloys, such as brass, what are the objections to mixing the different metals composing the alloy before they are passed through the cupola?

(7) What are some of the advantages of an oil-burning furnace for melting brass?

(8) What is the object in maintaining a new crucible at a heat of about 220° F. for several days before it is first used?

(9) (*a*) Describe the tongs necessary for handling crucibles into and out of the furnace. (*b*) Describe the appliances used for supporting the crucibles while carrying them about the floor or when pouring the molds.

(10) (*a*) What is the advantage of introducing silicon into alloys containing copper, such as brass or bronze? (*b*) How is silicon added to the alloys?

(11) (*a*) What is the object of adding phosphorus to a brass or bronze alloy? (*b*) How may phosphorus be added to a brass or bronze alloy?

(12) What is gun metal?

(13) When melting tin in a crucible, why is it necessary to watch it carefully and remove it from the fire as soon as the tin is melted, thus avoiding raising the temperature of the metal much above the melting point?

(14) What is brass?

(15) What is bronze?

(16) If bismuth be added to an alloy of other metals, what effect has it on the melting point of the alloy?

(17) What effect, in general, has antimony on other metals with which it is alloyed?

(18) How is scrap brass graded?

(19) Why is it not good practice to use phosphorus in castings that are to be subjected to high temperatures?

(20) When brass chips are to be melted, how may any iron chips or filings be removed from them?

BLACKSMITH-SHOP EQUIPMENT

EXAMINATION QUESTIONS

(1) What is the purpose of the tuyère in a forge?

(2) Why should the top board of the bellows be held up when the bellows is not in use?

(3) What blast pressure is ordinarily used for a blacksmith's forge?

(4) How are the gases and smoke from the forge carried off when the down-draft system is used?

(5) What is the greatest advantage of a down-draft system?

(6) Why should the fan or blower be located near the forge?

(7) How may the danger of explosion of gas that may leak into the blast pipe from the forge be prevented?

(8) What fuel is most commonly used on a blacksmith's forge?

(9) Why should fuel containing sulphur and phosphorus be avoided for heating iron?

(10) What is the objection to supplying too much air to a forge fire?

(11) Describe one method of starting a fire in a blacksmith's forge.

(12) What are the advantages of the hollow fire?

(13) Why is the face of an anvil crowned crosswise?

(14) Explain the uses of the flatter and the fuller.

(15) How does the form of the hot cutter differ from that of the cold cutter?

(16) State the use of the tapered mandrel.

(17) For what purpose is the surface plate used in a forge shop?

(18) What is the best material for marking work that is to be heated in the forge?

(19) For what kind of work is the cape chisel used?

(20) Why should the hack-saw blade be lifted slightly from the work on the backward stroke?

IRON FORGING

EXAMINATION QUESTIONS

(1) What are the differences in composition and structure between wrought iron and cast iron?

(2) What effect has careful reheating and working on the strength of wrought iron?

(3) What is meant by the term drawing?

(4) What is meant by the term welding?

(5) In drawing down a piece of square work, state the order in which the four sides should be brought under the hammer.

(6) Describe one method of making a figure-8 link with unwelded ends, like that shown in Fig. I.

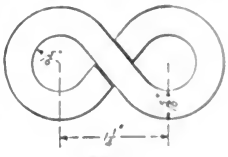

FIG. I

(7) Why is it well when upsetting the end of a bar to make the final heat a welding heat?

(8) How does the size of stock for steel bolts compare with that of wrought-iron bolts of the same diameter?

(9) What is the object in using a flux when welding iron?

(10) What are the most common fluxes used: (*a*) for welding wrought iron? (*b*) for welding steel? and (*c*) for welding steel to wrought iron?

(11) How is calcined borax made?

(12) Describe the making of a scarf weld.

(13) If the largest available stock for the shaft shown in Fig. II is a bar 3 inches in diameter, describe one method of forging it, the dimensions on the drawing being finished

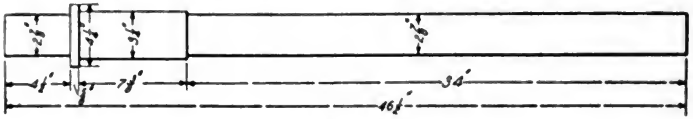

FIG. II

dimensions, and it being necessary for the blacksmith to allow $\frac{1}{16}$ inch all over the piece, to be turned off in finishing.

(14) In what class of work is a cleft weld generally used?

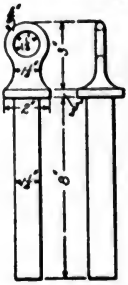

FIG. III

(15) What is meant by the term fagoting?

(16) What is the length of stock necessary for a ring of 1-inch round iron having an inside diameter of 12 inches, allowing $\frac{1}{4}$ inch for upsetting and scarfing?

(17) Describe a method of forging the round pin shown in Fig. III, any desired size of stock being available.

(18) How are boiler tubes welded?

TOOL DRESSING

EXAMINATION QUESTIONS

(1) What is ordinarily meant by the term tool steel, and what element gives it its useful property, alloy steels not being considered?

(2) What is the most valuable property of tool steel?

(3) How is blister steel made?

(4) How is shear steel made?

(5) How is crucible steel made?

(6) What is meant by the temper of tool steel?

(7) What percentage of carbon is contained in the best steel for general work?

(8) How is high-carbon tool steel annealed?

(9) How is high-carbon tool steel hardened?

(10) How is high-carbon tool steel tempered?

(11) Give the names of the temper colors, beginning with the one indicating the hardest steel.

(12) What is meant by soaking steel?

(13) How is a cold chisel hardened and tempered in one heat?

(14) Describe one method of tempering a spring.

(15) Why is a flux used when welding steel?

(16) Describe the steeling of a pick point.

(17) How may alloy, or high-speed, tool steels be annealed?

(18) To what heat must high-speed tool steel be heated for hardening?

(19) How can alloy tool steels be distinguished from high-carbon tool steels by the emery-wheel test?

(20) Describe one method for breaking pieces of tool steel from the bar.

HARDENING AND TEMPERING

EXAMINATION QUESTIONS

(1) What distinguishes tool steel from a low-carbon steel?

(2) What is the object of using a muffle when heating tool steel?

(3) Why is oil or gas better than a solid fuel for heating steel?

(4) Why is a lead bath sometimes used for heating steel?

(5) Why is steel annealed?

(6) Describe the process of water-annealing small pieces of steel.

(7) What should be the temperature of the hardening bath for ordinary work?

(8) For what two purposes is salt added to the hardening bath?

(9) Why should mineral oils not be used for hardening baths?

(10) What is meant by drawing the temper?

(11) Describe the process of tempering in oil.

(12) What is the purpose of pack hardening?

(13) What is the advantage of the method of tempering a milling-machine cutter by placing a heated rod through the hole in the cutter?

(14) Describe one method of hardening and tempering bits for wood planes.

(15) How is the temper for circular saws for wood drawn and tested?

(16) To what color should the temper of large springs be drawn?

(17) How may self-hardening steel be annealed so that it may be machined for making reamers, taps, etc.?

(18) What precautions for safety should be taken in the arrangement of an oil-tempering furnace?

(19) Describe one method of maintaining the hardening bath at any desired temperature.

(20) What instruments are used for measuring high temperatures?

TREATMENT OF LOW-CARBON STEEL

EXAMINATION QUESTIONS

(1) Between what limits does the percentage of carbon usually vary in low-carbon steel?

(2) What effects have phosphorus and sulphur on steel?

(3) What effect has an increase of carbon on the strength of steel?

(4) Describe, briefly, the Bessemer process of making steel.

(5) Describe, briefly, the open-hearth process of making steel.

(6) What part of a steel ingot usually contains most of the impurities?

(7) What is meant by the term piping, as applied to steel ingots?

(8) How may piping be prevented?

(9) Why do nickel-steel forgings cost more than forgings made of ordinary low-carbon steel?

(10) What is the object of oil-treating steel forgings?

(11) For what purpose is low-carbon steel case-hardened?

(12) How are small pieces of steel case-hardened to resist wear?

(13) What is the object of allowing case-hardened work to cool in the packing boxes and then reheating it for hardening?

(14) How may certain parts of case-hardened work be left soft?

(15) How may extra hard spots be made on case-hardened work?

(16) How may the temperature and condition of the work in the case-hardening box be determined while the work is being heated?

(17) When case-hardening work for color, why is it necessary to char the bone before using it for packing the work?

(18) If it is desired to produce temper colors on case-hardened work, how may this be done?

(19) Describe the method of case-hardening with potash.

(20) Describe one method of bluing steel.

HAMMER WORK

EXAMINATION QUESTIONS

(1) What are the objections to trip hammers that have caused them to be largely displaced by other styles of hammers?

(2) Why should the anvil of a power hammer be mounted on a separate foundation?

(3) State two objections to steam helve hammers.

(4) State two advantages of the steam forging hammer as compared with the helve hammer.

(5) Give two points of difference between the steam forging hammer and the steam drop hammer.

(6) Why are the dies of steam hammers generally set at an angle of 45° to the face of the frame?

(7) Describe two types of steam-hammer guides.

(8) Why is a heavier hammer required for steel forgings than for wrought-iron forgings of the same size?

(9) What is the effect of using a hammer that is too light for the work?

(10) Why is an elastic foundation sometimes used under the anvil of a steam hammer for forging steel?

(11) What is a porter bar?

(12) For what purpose are stocks used?

(13) Why are large wrought-iron forgings made by welding up scrap?

(14) Why should steel scrap not be used in wrought-iron forging?

(15) How is the forging for a large shaft started when no porter bar is used?

(16) How much larger in diameter should an ingot be than the finished steel forging?

(17) Why is the weld in a structural shape, such as an angle or channel, not as strong as the rest of the piece?

(18) Why is a forging press better than a steam hammer for forging steel?

(19) What are the advantages of forging medium-sized crank-shafts in pairs?

(20) How is a hollow shaft forged?

MACHINE FORGING

EXAMINATION QUESTIONS

(1) What is meant by machine forging?

(2) Explain the steps in rolling round bars from blooms.

(3) What is meant by graded rolling?

(4) What is the advantage of having the work move toward the operator when rolling between dies?

(5) Describe the process of rolling threads on screws.

(6) Describe the process of bending a plate of metal into cylindrical shape.

(7) For what class of forgings is the board drop hammer especially useful?

(8) What is the advantage of the steam drop hammer over both the board and the crank drop hammers?

(9) For what class of work is the steam drop press especially suitable?

(10) When may drop-hammer dies be made of cast iron, and when should they be made of steel?

(11) Describe two ways in which drop-hammer dies are held in place.

(12) What is meant by the term flash?

(13) What advantage has a solid foundation over an elastic foundation for a drop hammer?

(14) What is the object of setting one of the blades of a pair of shears at an angle to the other?

(15) What is the advantage of the vertical shear over the lever shear?

(16) Why is the bed of a press sometimes set on an angle?

(17) What is a bulldozer?

(18) What are second-motion dies?

SPECIAL FORGING OPERATIONS

EXAMINATION QUESTIONS

(1) Why are oil and gas furnaces preferred to coal and coke furnaces?

(2) What is the special advantage of the trolley hoist system as a handling device?

(3) What advantage has a traveling crane over all other hoist systems?

(4) Where the rivet holes in two plates that have been put together do not correspond exactly, what two methods may be used to bring the holes into line?

(5) Describe one method of bending angle irons.

(6) Is a flux necessary in welding structural shapes, such as angles?

(7) When any structural shape has been welded, how should it be treated to restore the fine texture of the metal and insure the greatest strength in the piece?

(8) Why is the interior of an electric weld usually better than the interior of a fire-made weld?

(9) What effect has repeated heating on cast iron?

(10) What effect has repeated heating on wrought iron or low-carbon steel?

(11) What is thermit?

(12) Describe the process of welding two pieces of steel together by means of thermit.

(13) What is meant by the term soldering?

(14) Describe the process of sweating.

(15) How is soldering fluid made?

(16) In soldering aluminum, how is the oxide removed from the surface of the metal?

(17) What is meant by the term brazing?

(18) How is the surface of cast iron treated so as to make it possible to braze it?

(19) How is brass or copper tubing annealed?

(20) What precaution is taken to prevent brass and copper tubing from flattening while being bent?

INDEX

NOTE.—All items in this index refer first to the section (see the Preface) and then to the page of the section. Thus, "Anvil, §56, p17," means that anvil will be found on page 17 of section 56.

A

Acid Bessemer process, §60, p2.
Advantages of electric welding, §63, p24.
Air chamber, §56, p2.
  furnace construction of, §51, p20.
  furnace mixture for malleable castings, §51, p12.
  furnace process for malleable castings, §51, p19.
  hardening, §58, p6.
  hardening steel, §58, p29.
  hoist, §49, p23.
  hoist, Screw-governed, §49, p24.
  tempering, §58, p20.
  tempering furnace, §59, p38.
Ajax-metal, §54, p35.
Alloying copper with zinc, §54, p30.
Alloys and mixtures, §54, p25.
  Bismuth in, §54, p32.
  Copper and zinc, §54, p28.
  Lead and copper, §54, p30.
  Manganese in, §54, p31.
  Tin and copper, §54, p25.
  Use of aluminum in, §54, p24.
  Use of phosphorus in, §54, p23.
  Use of silicon in, §54, p22.
Alloy steel, Strength of, §58, p30.
  steels, §58, p1.
  steels, Method of annealing, §58, p29.
Altar, §57, p4.
Aluminum, Method of soldering, §63, p35.
  Use of, in alloys, §54, p24.
American antifriction metal, §54, p35.
Amperes, §63, p22.
Analysis of gas, §52, p23.
Angle, Method of making, §57, p21.
Angles, Method of bending, §63, p17.
  Method of welding, §63, p20
Annealed castings, Disposition of, §53, p24.
  scrap, §51, p11.
  test pieces, §53, p30.
Annealing a cold chisel, §58, p11.
  brass and copper pipe, §63, p45.
  by packing, 59, p4.
  carbon steel, §59, p4.
  Changes produced during, §53, p1.
  Definition of, §58, p5.
  equipment, Special, §53, p31.
  Extent to which is carried, §53, p3.
  furnaces, §60, p11.
  high-speed steels, §58, p29.
  high-speed tool steels, §59, p30.
  low-carbon steel, §60, p9.
  Object of, §60, p9.
  oil tempering, and case hardening, §60, p9.
  oven chimney, §53, p19.
  oven, Coal-burning equipment for, §53, p12.
  oven, Coal-dust-burning equipment for, §53, p16.
  oven, Gas-burning equipment for, §53, p14.
  oven, Oil-burning equipment for, §53, p15.
  oven, Producer-gas-burning equipment for, §53, p17.
  oven, Special, §53, p31.
  ovens, §53, p8.
  ovens, Charging, §53, p19.
  ovens, Discharging, §53, p23.
  ovens, Doors for, §53, p10.
  ovens, Firing, §53, p20.
  ovens, Heating, §53, p12.
  ovens, Use of traveling cranes for charging §53, p33.
  Packing materials for, §59, p4.
  Packing materials used during, §53, p4
  pots, §53, p6.
  pots, Covering, §53, p7.
  pots, Life of, §53, p8.
  pots, Packing, §53, p6
  pots, Shaking out, §53, p23.
  pots, Stool for, §53, p6.
  process for malleable castings, §53, p1.
  process, Special, §53, p35.

53B—42

Annealing—(Continued)
steel forgings, §60, p11.
steel for springs, §59, p26.
Water, §59, p5.
Anthracite culm, §56, p13.
Antifriction metal, §54, p35.
Antimonial lead, §54, p35.
Antimony, Characteristics of, §54, p33.
Anvil, Construction of, §56, p17.
Construction of face of, for drawing, §56, p18.
Hardie hole in, §56, p18.
Method of mounting, for power hammers, §61, p4.
Position of work on, §57, p6.
Pritchel hole in, §56, p18.
setting, §56, p18.
tools, §56, p25.
vise, §56, p30.
Weight of, §56, p18.
Apparatus used in electric welding, §63, p23.
Asbestos paper, Use of, under vise jaws, §56, p31.
Axles, Method of making, §61, p28.

B

Babbitt metal, §54, p31.
metal, Objections to, in forge fires, §56, p15.
Ball-peen hammers, §56, pp19, 20.
Band ring, Method of making, §57, p35.
saws for metal, §50, p32.
saws, Method of brazing, §63, p43.
saws, Solder for, §63, p44.
Bar iron, Weight of, per foot, §63, p51.
Barrels, Exhaust tumbling, §52, p31.
Oblique tumbling, §50, p37.
Sand-blast tumbling, §50, p43.
Tumbling, §50, p33; §52, p30.
Bars, Cross, for flasks, §50, p9.
Method of rolling, §62, p2.
Basic Bessemer process, §60, p3.
Bath for bluing steel, §60, p36.
for cooling crankpins and wrist pins, §60, p34.
Baths, Arrangement of air pipes in, §59, p43.
Arrangement of, for constant temperature, §59, p42.
Brine, §59, p42.
for case-hardening work, §60, p27.
for hardening, §59, p42.
for hardening circular saws, §59, p23.
Oil, §59, p43.
Beam power hammers, §61, p1.
Bearing metal, Graphite, §54, p35.
metals, §54, pp35, 37.
Bellows, §56, p5.
Care of, §56, p6.
Belt conveyers, §50, p37.
Bench forge, §59, p32.
Vise, §56, p30.
Benches, Core, §50, p16.
Bending, §57, p9.
angles, §63, p17.
brass and copper pipe, §63, p45.
Definition of, §57, p5.
floors, §63, p20.
large tubing, §63, p46.
plates, §63, pp17, 22.
rolls, §62, p11.
small tubing, §63, p45.
structural shapes, §63, p21.
Bends in blast pipes, §56, p11.
Bessemer process, §60, p2.
steel for tools, §59 p29.
Bevel, §56, p35.
Square, §56, p35.
Bismuth, Characteristics of, §54, p32.
in alloys, §54, p32.
Bituminous coal, §56, p13.
Black heart, §51, p9.
Blackenings for brass molds, §54, p2.
Blacksmith-shop equipment, §56, p1.
Blacksmithing tools, §56, p17.
Blast for culm or siftings, §56, p13.
furnace, §57, p1.
gates, §56, p7.
Machines for furnishing, §49, p14.
Objections to excess of, §56, p14.
pipes, §56, p11.
Positive, §56, p8.
pressure, Loss of in pipes, §56, p11.
Pressure of, for reverberatory furnace, §63, p7.
Blazing off, §58, p25.
Blister steel, §58, p1.
Block, Bumping, §57, p14.
tin, §54, p26.
Blocks, Swage, §56, p27.
Bloom, §57, p4; §62, p2.
Blower, §56, p5.
for brazing, §63, p38.
Positive rotary, §56, p8.
Blowers, §49, p14.
portable, §56, p7.
Blowpipe for brazing, §63, p38.
Operation of, §63, p39.
Bluing polished steel, §60, p36.
steel, §60, p36.
with a molten bath, §60, p36.
Board drop hammer, §62, p12.
Boards, Match, §48, p23.
Mold and bottom, §50, p14.
Bod stick, §51, p26.
Boiler tubes, Method of welding, §57, p53.

Boiler tubes—(Continued)
Use of, on reverberatory furnace, §63, p7.
Bolt, §63, p30.
header, §57, p18.
head, Hexagonal, §57, p20.
head, Method of making, §57, p45
Method of making, §57, p16.
Square-headed, §57, p16.
T-headed, for planer, §57, p18.
tongs, §56, p27.
Bolts, Steel stock for, §57, p21.
Stock for, §57, p20.
Wrought-iron stock for, §57, p20.
Bone, Use of, for case-hardening, §60, p16.
Use of old, §60, p23.
Boot, Elevator, §49, p41.
Borax, §58, p26; §63, p32.
Calcined, §57, p29.
for brazing, §63, p39.
glass, §57, p29.
Boring tool, Method of forging, §58, p20.
Bosh, Water, §51, p29.
Bottom boards, §50, p14.
Fuller, §56, p25.
Swage, §56, pp23, 25.
Bottoms of furnaces §52, p6.
Boxes, Case-hardening, §60, p26.
for bearings, §63, p37.
Brass, §54, p28.
Appliances for melting, §54, p7.
borings and turnings, Using, §54, p38.
castings, Cleaning, §54, p6.
castings, Making molds for, §54, p4.
castings, Molds for, §54, p1.
castings, Pickling, §54, p7.
castings, Provision for contraction in, §54, p4.
castings, Scrap metal for, §54, p37.
castings, Tumbling barrels for, §54, p7.
Crucibles for melting, §54, p15.
furnace, Location of, §54, p8.
furnace, Oil-burning, §54, p14.
furnace, Operating the, §54, p17.
furnace, Simple, §54, p8.
furnaces in a battery, §54, p9.
Increasing the speed of melting, §54, p12.
Melting of old, §54, p17.
molding, Materials used in, §54, p2.
molding, Sand for, §54, p2.
molds, Blackenings and partings for, §54, p2.
molds, Drying, §54, p4.
molds, Gating and feeding, §54, p5.
molds, Lycopode for, §54, p3.
molds, Mixing facings for, §54, p4.
molds, Venting, §54, p4.
Oxidation of, in melting, §54, p20.
pipe, Method of annealing §63, p45.
Brass (Continued)
Precautions in melting, §54, p21
scrap, Grading, §54, p37.
Soldering two sheets of, §63, p34
tubing, Precautions in brazing, §63, p40
Brazing, §63, pp30, 37.
band saws, §63, p43.
cast iron, §63, p44.
Precautions necessary in, §63, p40.
tempered-steel articles, §63, p42
the joint of a pair of tweezers, §63, p42
Three necessary requirements, §63, p40
Tools and supplies for, §63, p38
Breaking down, §61, p9.
steel, §58, p36.
Breast of a furnace, §51, p24.
Breeching for carrying gas from producers, §52, p24.
Brick forge, §56, p1.
Bridge wall, §57, p4.
Brine, Use of, in forge bottom, §56, p3.
Bronze, §54, p28.
Carbon, §54, p35.
castings, Scrap metal for, §54, p37.
Cornish, §54, p35.
Damascus, §54, p35.
Graney, §54, p35.
Harrington, §54, p35.
Manganese, §54, p35.
Phosphor, §54, pp35, 36.
Tobin, §54, p35.
Brushes, Steel-wire, §50, p30.
Buildings, Foundry, §49, p3.
Building up, §57, p32.
Bulldozers, §62, p31.
Bumping block, §57, p14.
Bungs for furnace roofs, §51, p20.
Burning off, §58, p25.
steel, §58, p26.
Burrs, §57, p18.
Butt brazing, §63, p43.
joint, §63, p41.
welding, §57, p31.
welds, §57, p29.
welds, Examples of, §57, p43.
Butterfly valve, §52, p10.

C

Calcined borax, §57 p29.
Calipers, §56, p31.
Double, §56, p31.
Inside, §56, p31.
Outside, §56, p31.
Single, §56, p31.
Camelia metal, §54, p35.
Capacity of cushioned upright helve hammers and strap hammers, §61, p6.

Capacity—(Continued)
of molding machine, §48, p8.
Cape chisel, §56, p35.
chisel, Method of making, §58, p13.
Carbon bronze, §54, p35.
Combined, §51, pp1, 7.
Condition of, in malleable castings, §53, p2.
Effect of, on hardening heat of steel, §59, p29.
Effect of, on steel, §59, p1.
Graphitic, §51, p7.
in malleable iron, §51, p7.
Percentage of, in annealed castings, §53, p2.
Percentages of, in tool steels, §58, p5.
Points of, §58, p4.
steel, §58, p1.
steels, §59, p1.
temper, §51, pp1, 8.
Carbonic acid, §52, p21.
oxide, §52, p21.
Case-hardened work, Method of cleaning, §60, p26.
hardened work, Producing temper colors on, §60, p26.
hardening, §60, p15.
hardening boxes, §60, p26.
hardening centers, §60, p19.
hardening, Cooling baths for, §60, p27.
hardening equipment, §60, p26.
hardening for color, §60, p24.
hardening furnace, §60, p35.
hardening furnace for round work, §60, p32.
hardening gun parts, §60, p18.
hardening, Hard spots in, §60, p23.
hardening large or heavy work, §60, p21.
hardening, Method of cooling work, §60, p32.
hardening, Method of localizing, §60, p19.
hardening, Packing materials for, §60, p16.
hardening, Production of soft spots in, §60, p22.
hardening, Theory of, §60, p15.
hardening with potash, §60, p29.
hardening work without colors, §60, p20.
Cast iron, Effect of repeated heatings on, §63, p25.
iron, Method of brazing, §63, p44.
iron, Nature and composition of, §57, p2.
iron, Properties of, §57, p2.
steel, §58, p2.
Castings, Annealing processes for malleable, §53, p1.
Assorting, §52, p33.
Cleaning brass, §54, p6.
Cleaning, by hand, §52, p33.
Castings—(Continued)
Cleaning hard, §52, p29.
Coal and air furnace mixtures for malleable, §51, p12.
Disposition of annealed, §53, p24.
Examination of malleable, §53, p28.
Finishing department for malleable, §53 p26.
Finishing soft malleable, §53, p25.
Galvanizing malleable, §53, p36.
Inspection of malleable, §53, p30.
Iron flasks for steel, §50, p2.
Irons used in making malleable, §51, p9.
Making molds for brass, §54, p4.
Material for packing malleable, §53, p4.
Method of cleaning, §50, p27.
Method of producing heavy, §50, p3.
Packing malleable, in annealing pots, §53 p6.
Pickling, §50, p39; §52, p33.
Preparation of molds for malleable, §52 p26.
Provision for contraction in brass, §54, p4.
Sand blast for cleaning, §50, p41; §52, p33
Scrap metal for brass and bronze, §54, p37
Special annealing ovens for malleable, §53 p31.
Special annealing process for malleable, §53, p35.
Star, for tumbling barrels, §50, p34.
Storage of malleable, §53, p30.
Test plugs for malleable, §53, p27
Center or prick punch, §56, p35.
Centers, Method of case-hardening, §60, p19.
Chain-conveyer furnace, §59, p38.
hoists, §49, p22.
hook, Forming the eye, §57, p23.
hook, Method of making, §57, p23.
Method of making, §57, p40.
Charcoal, §56, p13; §59, p4.
Advantages of, for fuel, §56, p13.
iron, Amount of silicon in, §51, p9.
Objections of, for fuel, §56, p14.
Charging an open-hearth furnace, §52 p11.
annealing ovens, §53, p19.
floor elevator, §49, p45.
floors for cupolas, §49, p13.
machines, §52, p13.
platform for cupolas, §49, p13.
the coal furnace, §51, p26.
truck, §53, p19.
Checkerwork for furnace, §52, p1.
Repairing of, §52, p10.
Chemical changes produced in annealing malleable castings, §53, p1.
composition of malleable iron, §51, p4.
Chilled iron, Steel for turning, §59 p28.

Chimney for annealing oven, §53, p19.
for regenerative furnace, §52, p11.
Chimneys, §56, p9.
Chipping hammer, §56, p20.
hammer, Pneumatic, §50, p28.
Chisel, Cape, §56, p35.
Cold, §56, p35.
Flogging, §56, p24.
for nicking cold work, §61, p23.
Stone, §58, p20.
temper, §58, p4.
Chisels, Machine for heading, §58, p21.
Swage for, heads, §58, p21.
Chloride of zinc, §63, p32.
Cinder mill, §50, p44.
Circular annealing and hardening furnace, §59, p33.
butt joints, §63, p42.
saws, File test for hardness of, §59, p24.
saws for wood, §59, p22.
Classification of forging machines, §62, p1.
of hammers and sledges, §56, p19.
of welds, §57, p29.
Clay for bottom of fire-space, §56, p3.
Cleaning brass castings, §54, p6.
castings by hand, §52, p33.
castings, Methods of, §50, p27.
hard castings, §52, p29.
work, §60, p26.
Cleft weld, §61, p35.
welding, §57, p32.
welds, §57, p29.
Coal, §56, p13.
Amount of gas from one ton of, §52, p24.
Bituminous, §56, p13.
burning equipment for annealing oven, §53, p12.
dust-burning equipment for annealing oven, §53, p16.
furnace, Construction of, §51, p20.
furnace, Firing the, §51, p30.
furnace mixture for malleable casting, §51, p12.
furnace process for malleable casting, §51, p19.
Soft, §56, p13.
Coiled springs, §59, p27.
Coke, §56, p13.
Cold chisel, §56, p35.
chisel, Annealing a, §58, p11.
chisel, Forging a, §58, p8.
chisel, Hardening a, §58, p11.
chisel, Hardening and tempering in one heat, §58, p12.
chisel, Tempering a, §58, p12.
cutter, §56, p24.
cutter, Lubrication of, §56, p24.
Cold — (Continued)
Hardie, §56, p25.
saws for metal, §59, p24.
short, §56, p13, §60, p1.
shuts, §57, p39.
Collar tool, §56, p23.
Colors, Cooling to obtain, §60, p25.
corresponding to various temperatures, §63, p49.
Obtaining, by case-hardening, §60, p24.
Temper, §58, p7, §59, p8.
Combination forge, §56, p4.
Combined carbon, §51, pp1, 7.
Combustion, Governing, by observation of smoke coming from chimney, §53, p36.
Comparison of board and crank drop hammers, §62, p15.
of drop-hammer foundations, §62, p25.
Conditions governing welding, §57, p27.
Cone, §56, p28.
Connecting-rod, Method of forging, §61, p33.
Construction of molds for thermit welds, §63, p28.
of the anvil, §56, p17.
Contraction of malleable iron, §51, p3.
Provision for, in brass molds, §54, p4.
Control of steam hammers, §61, p14.
Converter, §60, p2.
Conveyer for mold, §49, p41.
Rubber-belt, §49, p32.
Conveyers, Belt, §50, p37.
Reciprocating, §49, p30.
Sand, §49, p29.
Cooling baths for case-hardening work, §60, p27.
baths for taps and reamers, §59, p12.
baths, Water, §59, p42.
case-hardened work, §60, p32.
work to obtain colors, §60, p25.
Copper, Alloying of, with zinc, §54, p30.
Analysis of, §54, p22.
and lead alloys, §54, p30.
and tin alloys, §54, p25.
and zinc alloys, §54, p28.
bit, §63, p30.
bit, Effect of overheating, §63, p34.
bit, Heating, §63, p31.
bit, Proper temperature of, §63, p34.
bit, Tinning, §63, p33.
Buying, §54, p22.
Deoxidizing, §54, p22.
Electric welding of, §63, p25.
pipe, Method of annealing, §63, p45.
Use of, for vise jaws, §56, p31.
Core benches, §50, p16.
box vise, §50, p16.
machines, §50, p22.

Core—(Continued)
mixture for machine-made cores, §50, p23.
ovens, §50, p18.
ovens, Antifriction trucks for, §50, p21.
plates, §50, p17.
racks, §50, p17.
rod straightener, §50, p26.
room arrangement, §50, p15.
Cores, Machine-made, §50, p21.
Corner plate, Method of making, §57, p33.
Cornish bronze, §54, p35.
Coupler for tongs, §56, p26.
Crane, Jib, §49, p20.
Use of traveling, for charging annealing ovens, §53, p33.
Cranes, Traveling, §49, p16.
Crank drop hammer, §62, p13.
lift hammer, §62, p15.
shafts, Forging, §61, p31.
Crop end, §61, p28.
Cross-bars for flasks, §50, p9.
peen hammers, §56, pp19, 20.
rolling, §62, p6.
Crown of a furnace, §51, p24.
Crucible, Adjusting the, in the furnace, §54, p18.
and cupola furnace combined, §54, p12.
for thermit welding, §63, p27.
furnace, §54, p7.
furnace, Blast for, §54, p12.
process, §58, p1.
shank, §54, p20.
steel, §58, p1.
tongs, §54, p18.
Crucibles, Capacities of, §54, p16.
Care of, §54, p15.
for melting brass, §54, p15.
Handling, §54, p19.
Culm, §56, p13.
Cupola for melting malleable iron, Fuel ratio in, §51, p18.
mixture for malleable castings, §51, p12.
process for malleable castings, §51, p17.
Cupolas, Charging floors for, §49, p12.
Charging platform for, §49, p13.
Location of, §49, p12.
Curves in blast pipes, §56, p11.
Cutter, Cold, §56, p24.
for cutting rivet heads, §56, p24.
Hot, §56, p24.
Side, §56, p25.
Cutters, §56, p24.
or hacks, §61, p22.
Cyanide-hardening furnace, §60, p17.
hardening to resist wear, §60, p17.
Cylindrical work, Method of hardening, §59, p13.

D

Damascus bronze, §54, p35.
Danger of explosion, §56, p11.
Definition of soldering, §63, p30.
Definitions of forging operations, §57, p5.
of steels, §58, p1.
Delta metal, §54, p35.
Deoxidizing metals, §54, p22.
Diamond-pointed lathe tool, Hardening and tempering, §58, p17.
Die temper, §58, p5.
Dies, §59, p24.
Cast-iron, §61, p26.
Fastenings for drop-hammer, §62, p19.
for bolt header, §57, p18.
for steam hammers, §61, p25.
for thread rolling, §62, p10.
Form of drop-hammer, §62, p19.
Materials for, §62, p18.
Method of hardening, §59, p13.
Second-motion, §62, p32.
Setting of, in power hammers, §61, p15.
Steel for, §59, p28.
Use of, in rolling, §62, p5.
Volume of, §62, p20.
Differential chain block, §63, p15.
Dimensions for drop-hammer foundations, §62, p25.
Disposal of smoke and gases, §56, p9.
Dividers, §56, p32.
Dogs for bending plates, §63, p17.
Doors for annealing ovens, §53, p10.
Double calipers, §56, p31.
decked reverberatory furnace, §63, p8.
frame hammers, §61, p15.
Dovetailing, §63, p41.
Down-draft system, §56, p10.
Draft, natural, §56, p9.
necessity for, in a forge, §56, p14.
Drawing, §57, p6.
Definition of, §57, p5.
iron, Construction of anvil face for, §57, p6.
patterns, Machines for, §48, p9.
Round, §57, p7.
Square, §57, p8.
the temper, §58, pp7, 8.
the temper of circular saws, §59, p23.
Dressing marble turning tool, §58, p23.
stone drills, §58, p23.
Drift pin, §63, p16.
Drill, Method of forging, §58, p28.
Drills, Hardening twist, §59, p15.
Heating twist, §59, p15.
Tempering, §59, p16.
Twist, §59, p15.
Drop forging, §62, p12.
hammer die fastenings, §62, p19.

Drop—(Continued)
hammer dies, §62, p18.
hammer foundations, §62, p22.
hammers, §61, p1; §62, p1.
hammers and presses, §62, p12.
Drying brass molds, §54, p4.
Dry-sand molding, Comparison of, with loam, §50, p3.
Ductility of malleable iron, §51, p2.

E

Effect of annealing, §60, p9.
of carbon on steel, §59, p1.
of heating on low-carbon steel, §60, p8.
of oil treatment, §60, p13.
of repeated heating or. cast iron, §63, p25.
of repeated heating on metal, §63, p25.
of repeated heating on wrought iron or steel, §63, p26.
Effects of reheating wrought iron, §57, p5.
Elastic foundations, §62, p22.
Electric current, §63, p22.
welding, §63, p22.
Elevator boot, §49, p41.
Hydraulic, §49, p48.
Elevators, §49, p45.
for sand, §49, p40.
Emery grinder, Flexible shaft, §50, p29.
wheel stand, Stationary, §50, p30.
End mills, Hardening, heating, and tempering, §59, p19.
Equipment for case hardening, §60, p26.
for soldering, §63, p30.
Estimating stock, §63, p47.
Example of butt brazing, §63, p43.
of drop-hammer die works, §62, p21.
of horizontal forging machine work, §62, p32.
Examples of forging, §57, p6.
of hammer work, §61, p27.
of hardening and tempering, §59, p9.
Exhaust system, Overhead, §56, p9.
tumbling barrels, §50, p36; §52, p31.
Eye hanger, §52, p10.

F

Facings for brass molds, Mixing of, §54, p4.
Fagoting, §57, p33; §61, p28.
Fan, §56, p7.
for down-draft system, §56, p10.
for exhaust system, §56, p10.
rotary, §56, p5.
Fans, §49, p14.
Feeding brass molds, §54, p5.
Ferrosilicon, §51, p12.
File test for hardness, §59, p24.
Finished work, Electric welding of, §63, p25.
Finishing and assorting soft castings, §53, p25
work under a drop hammer, §62, p22.
work under a power hammer, §61, p9.
Fire, §56, p14.
and fire tools, §56, p14.
Forms of, §56, p16.
Hollow, §56, p16.
hook, §56, p16.
Method of holding, §56, p15.
Methods of starting, §56, p14.
Open, §56, p16.
oxidizing, §56, p14.
reducing, §56, p14; §57, p28.
tools, §56, p16.
Firing annealing ovens, §53, p20.
the coal furnace, §51, p30.
Flash, §62, p20.
pins, §50, p7.
Small iron, §50, p11.
Flashing off, §58, p25; §59, p27.
Flasks, §50, p1.
Cross-bars for, §50, p9.
Interchangeable knock-down, §50, p14.
Large iron, §50, p2.
Large wooden, §50, p2.
Nests of, §50, p13.
Ribbed, §50, p12.
Snap, §50, p12.
with spines, §50, p12.
Flat ring, Method of making, §57, p39.
springs, §59, p25.
tongs, §56, p27.
Flatter, §56, p23.
Flexible shaft, §50, p30.
shaft emery grinder, §50, p29.
Flogging chisel, §56, p24.
Floor and bench tools, §56, p27.
Fluid compression of steel, §60, p7.
Flux, §57, p1.
Fluxes, §57, p28; §63, p32.
Non-use of, for welding angles, §63, p21.
Foot-operated hammer, §61, p2.
Forge, Bench, §59, p32.
Brick, §56, p1.
Combination, §56, p4.
fires, §56, p13; §59, p2.
iron, §56, p5.
Tool-dresser's, §59, p39.
Tool-room, §59, p33.
tuyères, §56, p2.
Forges, §56, p1.
for heating rivets, §56, p12.
portable, §56, p12.
Forging boring tool, §58, p20.
Built up, §57, p27.
cold chisel, §58, p8.
connecting-rod, §61, p33.

Forging—(Continued)
crank-shafts, §61, p31.
Definition of, §57, p5.
diamond-pointed lathe tool, §58, p15.
Examples of, §57, p6.
flat drill, §58, p28.
gate hook, §57, p11.
hammer, §58, p14.
hammers, §61, p7.
high-carbon steel, §61, p36.
high-speed tool steels, §58, p30.
large iron shafts, §61, p29.
low-carbon steel, §61, p30.
machine, Pneumatic, §62, p34.
machines, Classification of, §62, p1.
operations, §58, p5.
Practical examples of, §57, p46.
press, §61, p31.
press work, §62, p27.
right-hand side tool, §58, p17.
rocker-arm from one piece, §57, p46.
rocker-arm with welded shoulder, §57, p47.
rod straps, §57, p26.
spring, §58, p24.
staple, §57, p10.
strap and trimming to size, §57, p27.
strap to size, §57, p26.
structural shapes, §63, p17.
Wrought-iron, §61, p27.
wrought-iron rudder frame, §57, p51.
Form of drop-hammer dies, §62, p19.
Forming and cutting tools, §56, p22.
Definition of, §57, p6.
Forms of fire, §56, p16.
Foundation, Concrete, §62, p26.
Foundations, Comparison of drop-hammer, §62, p25.
Concrete, §61, p19.
Dimensions for drop-hammer, §62, p25.
Elastic, §61, p19.
for drop-hammers, §62, p22.
Hammer, §61, p19.
Timbers for, §62, p23.
Foundries. Disposition of waste materials from, §49, p3.
Extension of, §49, p3.
Heating and ventilation of, §49, p4.
Jobbing, §49, p2.
Light for, §49, p3.
Location of, §49, p2.
Specialty, §49, p2.
Foundry branches, §49, p2.
buildings, §49, p3.
conditions, General, §49, p1.
Stock yard for, §49, p11.
Fuel for annealing ovens, §53, p12.
for hardening furnaces, §59, p32.
Fuel—(Continued)
for open-hearth furnaces, §52, p17.
Natural gas as, §52, p17.
ratio for coal or air furnace, §51, p31.
ratio in malleable cupola practice, §51, p18.
Fuels, §56, p13.
for reverberatory furnace, §63, p3.
Fuller, §56, p23; §61, p25.
Bottom, §56, p25.
Furnace, Air-tempering, §59, p38.
Altar for, §57, p4.
Arrangement of tapping spouts for, §52, p14.
Blast, §57, p1.
bottom, §51, p23.
bottom, Tool for patching, §52, p7.
bottoms, §52, p6.
bottoms, Cleaning and repairing, §52, p8.
breast, §51, p24.
Bridge wall for, §57, p4.
Case-hardening, for round work, §60, p32.
Chain-conveyer, §59, p38.
Charging an open-hearth, §52, p11.
Charging the coal, §51, p26.
Checkerwork for, §52, p1.
chimney, §52, p11.
Circular annealing and hardening, §59, p33.
Coke, §63, p1.
Combined cupola and crucible, §54, p12.
Construction of coal or air, §51 p20.
Conveyer, §63, p10.
crown, §51, p24.
crown, Repairing of, §52, p11.
Crucible, §54, p7.
Cyanide-hardening, §60, p17.
Double-decked reverberatory, §63, p8.
for case hardening with potash, §60, p29.
for hardening and tempering circular saws, §59, p22.
for heating milling cutters, §59, p17.
for heating taps and reamers, §59, p10.
for long work, §63, p9.
for tempering plane irons, §59, p21.
for tempering twist drills, §59, p16.
Fuel for hardening, §59, p32.
Gas, §59, p3.
Gas-fired case-hardening, §60, p35.
Hardening, §59, p40.
Lead-pot, §59, p39.
Location of brass, §54, p8.
Natural gas as fuel for open-hearth, §52, p17.
Oil as fuel for open-hearth, §52, p18.
Oil-burning brass, §54, p14.
Oil-heated annealing, §60, p12.
Oil-tempering, §59, p39.
Open-hearth, §57, p3; §60, p4.

Furnace—(Continued)
Operating the brass, §54, p17.
Oven-annealing, §59, p34.
Peel for charging, §52, p12.
Producer gas as fuel for, §52, p20.
Regenerative chambers for melting, §52, p1
Regenerative open-hearth, §60, p5.
Reheating, §53, p34.
Repairing of regenerative, §52, p9.
Reverberatory, §63, p2.
Sand temper-drawing, §59, p37.
Simple brass, §54, p8.
Straight-draft, §51, p21.
Tilting open-hearth, §52, p16.
Tumbling-barrel, §59, p35.
Furnaces, Advantages of gas-fired, §63, p1.
Advantages of oil-fired, §63, p1.
Annealing, §60, p11.
for hardening and tempering, §59, p32.
Fuel for open-hearth, §52, p17.
Gas-fired, §63, p31.
Heating, §63, p1.
in a battery, Brass, §54, p9.

G

Gad tongs, §56, p27.
Galvanizing annealed castings, §53, p36.
Gas, Amount of, made from one ton of coal, §52, p24.
Analysis of, §52, p23.
burning equipment for annealing oven, §53, p14.
Composition of producer, §52, p20.
fired case-hardening furnace, §60, p35.
flues, Cleaning, §52, p25.
flues or breechings, §52, p24.
furnace, §59, pp3, 10.
Furnace for burning, §52, p1.
in blast pipes, §56, p11.
Mixer for burning, §53, p15.
Natural, as furnace fuel, §52, p17.
or oil, Advantages of, for fuels, §59, p3.
producer and its connection, §52, p21.
Producer, as furnace fuel, §52, p20.
Use of, in muffle, §59, p3.
valves for regenerative furnace, §52, p3.
Gasoline-fired furnaces, §63, p31.
Gate hook, Method of forging, §57, p11.
saw, §50, p32.
Gating brass molds, §54, p5.
Gauge, Surface, §56, p29.
Gaulds, §57, p26.
Gear-molding machine, §48, p25.
Glut, §57, p51.
Graded rolling, §62, p5.
Grain tin, §54, p26.
Graney bronze, §54, p35.
Graphite bearing metal, §54, p35.
Graphitic carbon, §51, p7.
Gray iron, §51, p1.
Green-sand cores, Machine for, §50, p24.
Grinder, Flexible shaft emery, §50, p29.
Grinding high-speed steels, §58, p32.
stand, Stationary, §50, p30.
Guided power hammers, §61, p5.
Guides, Hammer, §61, p16.
Gun metal, §54, p26.
parts, Method of case-hardening, §60, p18.

H

Hack saws, §56, pp36, 38.
saw blades, §56, p36.
Hacks or cutters, §61, p22.
Half-and-half, §63, p30.
Hammer, Ball-peen, §56, p19.
Board drop, §62, p12.
Chipping, §56, p20.
Crank-drop, §62, p13.
Crank-lift, §62, p15.
Cross-peen, §56, p19.
Effect of, on work if too light, §61, p19.
Finishing work under a power, §61, p9.
Flogging, §56, p20.
Foot-operated, §61, p2.
foundations, §61, p19.
frames, Types of, §61, p15.
guides, §61, p16.
Hand, §56, p19.
Handle for, §56, p19.
handles, §56, p21.
Long-peen, §56, p19.
Method of forging, §58, p14.
Method of hardening and tempering, §58 p15.
Pneumatic chipping, §50, p28.
Proper weight of, §61, p18.
Rope-lift, §62, p15.
Steam drop, §61, p14; §62, p17.
Steam forging, §61, p11.
Straight-peen, §56, p19.
Strap-lift, §62, p15.
tools, §61, p21.
Upright helve, §61, p5.
work, §61, p1.
work, Examples of, §61, p27.
Hammers and sledges, §56, p19.
Beam power, §61, p1.
Capacity of cushioned upright helve and strap, §61, p6.
Capacity of rubber-cushioned helve, §61, p6.
Classification of, §61, p1.
Comparison of board and crank-drop, §62, p15.

Hammers—(Continued)
Control of steam, §61, p14.
Double-frame, §61, p15.
Drop, §61, p1.
Forging, §61, p7.
Helve, §61, p1.
Material for, §56, p21.
Power, §61, p1.
Rubber-cushioned helve, §61, p3.
Set, §56, p22.
Single-frame, §61, p15.
Steam helve, §61, p10.
Strap, §61, p5.
Trip, §61, p1.
Hand hammers, §56, p19.
puddling, §57, p3.
puddling, Disadvantage of, §57, p5.
riveting, §63, p16.
sledge, §56, p20.
sledge, Method of using, §56, p20.
sledges, §56, p19.
tools, §56, p19.
Handles, Fitting of, §56, p21.
for hammer, §56, p21.
for hand hammers, §56, p19.
Handling device, Relative advantages of, §63, p15.
devices, §63, p12.
Hanger, Open-eye, §57, p10.
Hard castings, Cleaning, §52, p29.
castings, Tumbling, §52, p29.
coal sifting, §56, p13.
lead, §54, p35.
scrap, §51, p11.
solder, §63, p30.
spots in case hardening, §60, p23.
Hardening a cold chisel, §58, p11.
and tempering, §59, p1.
and tempering a cold chisel in one heat, §58, p12.
and tempering a hammer, §58, p15.
and tempering a spring, §58, p24.
and tempering circular saws, §59, p22.
and tempering dies, §59, p24.
and tempering, Examples of, §59, p9.
baths, §59, p42.
Cyanide method of, §60, p17.
Definition of, §58, p5.
drills, §59, p15.
furnace, §59, p40.
high-speed steel, §59, p30.
large springs, §59, p26.
Metallic baths for, §59, p7.
milling cutters, §59, p18.
Oil bath for, §59, p6.
plane irons, §59, p20.
Salt solutions for §59, p6.
Hardening—(Continued)
small springs, §59, p26.
small work, §60, p20.
solutions, §59, p6.
specimen piece, §58, p7.
Spraying device for, §59, p14.
Temperatures for, §58, p6.
tools with potassium cyanide, §60, p18.
Water for, §59, p6.
Hardie, Cold, §56, p25.
hole, §56, p18.
hole, Use of, in bending iron, §57, p9.
Hot, §56, p25.
Harrington bronze, §54, p35.
Heading tool, §56, p25.
Hearth, Construction of, for reverberatory furnace, §63, p7.
for forge, §56, p1.
Heat, Amount of, in forge fire, §56, p14.
for foundries, §49, p4.
treatment of high-speed tool steels, §59, p29.
Heating devices, §56, p1.
furnace for high-speed tool steel, §58, p32.
furnaces, §63, p1.
in charcoal, §59, p4.
in lead, §59, p4.
large work for brazing, §63, p38.
milling cutters, §59, p17.
of annealing ovens, §53, p12.
of drills, §59, p15.
of taps and reamers, §59, p9.
the copper bit, §63, p31.
Helmet for sand-blast operator, §50, p43.
Helve hammers, §61, p1.
Hematite ore for packing malleable castings §53, p4.
High-carbon steel, §58, p1.
speed steel, Annealing, §59, p30.
speed steel, Hardening, §59, p30.
speed steel, Tempering, §59, p31.
speed tool steels, §58, p29; §59, p29.
temperature measurements, §59, p44.
Hoist, Air, §49, p23.
Air-operated, §63, p13.
Electrical-operated, §63, p14.
Motor-operated, §63, p12.
Screw-governed air, §49, p24.
Hoists, Chain, §49, p22.
Hollow fire, §56, p16.
forging, §61, p34.
mill, Hardening, §59, p20.
Hood for forge, §56, p1.
Hoods and chimneys, §56, p9.
Hook, §57, p23.
Bending a, §57, p24.
Twisting a, §57, p14.

Hoops, Electric welding of, §63, p23.
Horizontal forging machine, §62, p34.
presses, §62, p31.
Hot cutter, §56, p24.
hardie, §56, p25.
Short, §56, p13; §60, p1.
Hydraulic elevator, §49, p48.
forging press, §61, p31.
Hydrochloric acid, §63, p32.
Hydrofluoric-acid pickling solution, §50, p41.
Hydrogen, §52, p21.

I

Inclined presses, §62, p30.
Indicators or telltales, §60, p24.
Ingots, Irregularities in, §60, p6.
Inside calipers, §56, p31.
Iron, Amount of silicon in charcoal, §51, p9.
Cast, §57, p1.
Chemical composition of malleable, §51, p4.
Chemically pure, §57, p1.
Contraction of malleable, §51, p3.
Ductility of malleable, §51, p2.
flasks, §50, p2.
flask, Small, §50, p11.
forge, §56, p5.
forging, §57, p1.
for malleable castings, Pouring of, §52, p28.
for malleable castings, Tapping of, §52, p27.
Gray, §51, p1.
Malleable, §51, p1.
Manufacture of, §57, p1.
Method of tinning, §63, p35.
mixtures for malleable castings, §51, p12.
Open-hearth melting process for malleable §52, p1.
ore §57, p1.
Oxidation of, §57, p27.
Oxide of, §56, p14.
Pig, §57, p2.
Resilience of malleable, §51, p2.
Shrinkage of malleable, §51, p3.
Weight of sheet and plate, §63, p52.
Weight of square and round-rolled, §59, p24.
Weight per foot of bar, §63, p51.
White, §51, p1.
Irons used in making malleable castings, §51, p9.
Irregularities occurring in ingots, §60, p6.

J

Jaws for tongs, §56, p26.
Vise, §56, p31.
Jib crane, §49, p20; §63, p14.
Joint, Making a soldered, §63, p34.
Joints, Types of brazed, §63, p41.
Jump welding, §57, p32.
welds, §57, p29.

K

Knob, Method of brazing, §63, p42.
Knuckle-joint strap, §57, p43.

L

Ladle shank, §54, p20.
Ladles for malleable iron, §52, p28.
Handling, by trolley system, §49, p28.
Lap brazing, §63, p43.
welding, §57, p31.
welds, §57, p29.
welds, Examples of, §57, p45.
Lapped joint, §63, p41.
Large flat work, §59, p20.
or heavy work, Method of case-hardening §60, p21.
springs, Method of hardening, §59, p26.
Lathe and planer tool models, §58, p36.
tool, Hardening and tempering, §58, p17.
tool, Method of forging, §58, p15.
Lead and copper alloys, §54, p30.
Antimonial, §54, p35.
bath for twist drills, §59, p15.
Characteristics of, §54, p30.
Hard, §54, p35.
Objections to, in forge fires, §56, p15.
pot furnace, §59, p39.
Use of, for bath, §59, p4.
Lean ores, §57, p1.
Leather, Use of, for case hardening, §60, p16.
Le Chatelier pyrometer, §53, p21.
Leg vise, §56, p30.
Length of stock for a ring, §57, p37.
Lever shears, §62, p27.
Lifting device for case-hardening pots, §60, p33.
hook, §60, p15.
Linseed oil, §59, p16.
Loam molding, Comparison of, with dry-sand, §50, p3.
Localized case-hardening, §60, p19.
Locomotive frames, Repair of, by use of thermit, §63, p28.
reverse shaft, §57, p47.
valve yoke, §57, p50.
Long- or straight-peen hammer, §56, p21
peen hammers, §56, p19.
Loss of pressure in blast pipes, §56, p11.
Low-carbon steels, §59, p1.
Lubrication of cold cutter, §56, p24.
Lycopode for brass molding, §54, p3.

M

Machine, Automatic molding, §48, p17.
Capacity of a molding, §48, p8.

Machine—(Continued)
forging, §62, p1.
for cutting gates and sprues, §50, p32.
for cutting wire, §50, p27.
for heading chisels, §58, p21.
for molding curved pipes, §48, p29.
for molding plow-shares, §48, p30.
for pressing molds, §48, p4.
for straightening core rods, §50, p26.
for tempering sand, §49, p39.
made cores, §50, p21.
Molding, without rammer, §48, p20.
Molding, without stripping plate, §48, p12.
Pneumatic-power molding, §48, p13.
puddling, Advantages of, §57, p5.
shop cutting tools, §58, p36.
Stripping-plate molding, §48, p10.
Machines for breaking pig iron, §49, p48.
for drawing patterns, §48, p9.
for making cores, §50, p22.
for molding gears §48, p25.
for sifting sand, §49, p32.
Gear-molding, §48, p25.
Molding, §48, p3.
Portable molding, §48, p8.
Magnetic separators, §49, p36.
Making an angle, §57, p21.
axles, §61, p28.
band-ring, §57, p35.
bolt, §57, p16.
bolt head by welding on a ring, §57, p45.
boring tool, §58, p20.
cape chisel, §58, p13.
cast iron, §57, p1.
cold chisel, §58, p8.
corner plate, §57, p33.
diamond-pointed lathe tool, §58, p15.
flat drills, §58, p28.
flat ring, §57, p39.
flat spring, §58, p24.
hammer, §58, p14.
hexagonal bolt head, §57, p20.
pair of tongs, §57, p41.
ring hook, §57, p37.
small chain, §57, p40.
small chain hook, §57, p23.
soldered joint, §63, p34.
thermit weld, §63, p26.
T plate, §57, p35.
wrought iron, §57, p3.
Malleable casting, §51, p1.
casting, Coal or air furnace process for, §51, p19
casting, Furnace bottom for, §52, p7.
casting, Melting process for §51, p17.
casting, Pill-heat mixture for, §51, p17.
castings, Annealing process for, §53, p1.
Malleable—(Continued)
castings, Coal and air furnace mixtures for, §51, p12.
castings, Condition of carbon in, §53, p2.
castings, Cupola mixtures for, §51, p12.
castings, Cupola process for, §51, p17.
castings, Disposition of annealed, §53, p24.
castings, Examination of, §53, p28.
castings, Finishing department for, §53, p26.
castings, Finishing soft, §53, p25.
castings, Galvanizing of, §53, p36.
castings, Hematite ore for packing, §53, p4.
castings, Inspection of, §53, p30.
castings, Iron mixtures for, §51, p12.
castings, Irons used in making, §51, p9.
castings, Mixture for annealing pots for, §51, p16.
castings, Open-hearth mixture for, §51, p13.
castings, Packing, in annealing pots, §53, p6.
castings, Packing materials for, §53, p4.
castings, Percentage of carbon in annealed, §53, p2.
castings, Pouring iron for, §52, p28.
castings, Preparation of molds for, §52, p26.
castings, Puddle scale for packing, §53, p4.
castings, Special annealing ovens for, §53, p31.
castings, Special annealing process for, §53, p35.
castings, Storage of, §53, p30.
castings, Tapping iron for, §52, p27.
castings, Test plugs for, §53, p27.
cupola practice, Fuel ratio in, §51, p18.
furnace, Skimming of, §51, p28.
furnace spout, §51, p26.
iron, Arrangement of tapping spouts for, §52, p14.
iron, Charging the furnace for, §52, p11.
iron, Chemical composition of, §51, p4.
iron, Contraction of, §51, p3.
iron, Ductility of, §51, p2.
iron, Effect of pouring temperature on, §51 p2.
iron, Ladles for, §52, p28.
iron, Melting and refining, §51, p27.
iron, Open-hearth melting process for, §52 p1.
iron, Physical properties of, §51, p1.
iron, Rabbling a charge of, §51, p30.
iron, Resilience of, §51, p2.
iron scrap, §51, p11.
iron, Shrinkage of, §51, p3.
iron, Siemens-Martin process for, §52, p1.

Malleable—(Continued)
iron, Tapping, into large ladles, §52, p5.
iron, Tensile strength of, §51, p1.
iron test plug, §51, p28.
iron, Transverse strength of, §51, p2.
mixtures, Calculation of, §51, p13.
Mandrel Tapered, §56, p28.
Tip of, §56, p28.
Manganese bronze, §54, p35.
Characteristics of, §54, p31.
in alloys, §54, p31.
in malleable iron, §51, p5.
Manufacture of iron, §57, p1.
of low-carbon steel, §60, p2.
Marking materials, §56, p33.
Match boards, §48, p23.
boards with removable part patterns, §48, p22.
plates with movable patterns, §48, p21.
Material used for hammers, §56, p21.
Materials used for drop-hammer dies, §62, p18.
Measurements of high temperatures, §59, p44.
Measures, §56, p36.
Measuring wheel, or circular rule, §56, p32.
Mechanical puddling, §57, p4.
Melting and refining malleable iron, §51, p27.
brass, Appliances for, §54, p7.
brass, Crucibles for, §54, p15.
brass, Increasing the speed of, §54, p12.
brass, Oxidation in, §54, p20.
brass, Precautions in, §54, p21.
copper and old brass, §54, p17.
processes for malleable casting, §51, p17.
Rate of, in regenerative furnace, §52, p4.
ratio in malleable cupola practice, §51, p18.
Merchant steel, §60, p1.
Mercury bath, §59, p7.
Metal, Ajax, §54, p35.
American antifriction, §54, p35.
Antifriction, §54, p35.
Babbitt, §54, pp31, 33.
Camelia, §54, p35.
Cold saws for, §59, p24.
Delta, §54, p35.
for car boxes, §54, p35.
Graphite bearing, §54, p35.
Gun, §54, p26.
Salgee antifriction, §54, p35.
White, §54, p35.
Metallic hardening baths, §59, p7.
Metals, Bearing, §54, p37.
Composition of bearing, §54, p35.
Deoxidizing of, §54, p22.
Report on journal-bearing, §54, p38.
Weights of various, §63, p53
Method of hardening and tempering dies, §59, p24.
Methods of heating steel, §59, p2.
of tempering, §59, p8.
Mill, Cinder, §50, p44
Milling cutters, §59, p17
cutters, Hardening, §59, p18.
cutters, Heating, §59, p17.
cutters, High-carbon steel, §59, p17.
cutters, Low-carbon steel, §59, p17.
cutters, Removing internal stresses, §59, p20.
cutters, Tempering, §59, p19
Miscellaneous operations and data, §63, p16.
Mixer for burning gas, §53, p15.
Mixers for sand, §49, p36.
Models, Lathe and planer tool, §58, p36
Mold conveyer, §49, p41.
pressing machine, §48, p4.
Molding boards, §50, p14.
Example of multiple, §48, p24.
machine, Automatic, §48, p17.
machine, Capacity of a, §48, p8.
machine for curved pipes, §48, p29.
machine, Pneumatic-power, §48, p13.
machine, Stripping-plate, §48, p10.
machine, Vibrator for, §48, p14
machine without rammer, §48, p20.
machine without stripping plate, §48, p12.
machines, §48, p3.
machines, Portable, §48, p8.
Materials used in brass, §54, p2.
plowshares, Machine for, §48, p30.
Sand for brass, §54, p2.
Molds, Blackenings and partings for brass, §54, p2.
Comparison of iron and brass, §54, p1.
Drying brass, §54, p4
for brass castings, Making, §54, p4.
for malleable castings, Preparation of, §52 p26.
Gating and feeding brass, §54, p5.
Lycopode for brass, §54, p3.
Mixing facings for brass, §54, p4.
Venting brass, §54, p4.
Moon, §63, p18.
Motor-operated hoists, §63, p12.
Muffle, §59, p2.
or tube, Method of using, §59, p3
Muffles for case-hardening, §60, p30.
Muriatic acid, §63, p32

N

Names of welds, §57, p29
Natural gas as furnace fuel, §52, p17
Nature and composition of cast iron, §57 p2.

Nature—(Continued)
and composition of wrought iron, §57, p3.
of high-speed tool steels, §58, p29.
Nickel steel, §60, p7.
Nitrogen, §52, p21.

O

Object of welding, §57, p27.
Oil as a hardening bath, §59, p6.
as fuel for open-hearth furnace, §52, p18.
baths, §59, p43.
baths for hardening high-speed steel, §59, p30.
burning brass furnace, §54, p14.
burning equipment for annealing oven, §53, p15.
heated annealing furnace, §60, p12.
Linseed, §59, p16.
or gas, Advantages of, for fuels, §59, p3.
tempering, §59, p8; §60, p13.
tempering furnace, §59, p39.
treating, §60, p13.
treatment of low-carbon steel, §60, p13.
treatment of small work, §60, p14.
Use of, for tempering drills, §59, p16.
Open fire, §56, p16.
hearth furnace, §57, p3; §60, p4.
hearth furnace, Oil as fuel for, §52, p18.
hearth furnace, Operation of, §57, p4.
hearth furnace, Producer gas as fuel for, §52, p20.
hearth furnace, Tilting, §52, p16.
hearth furnaces, Fuel for, §52, p17.
hearth melting process, §52, p1.
hearth mixture for malleable castings, §51, p13.
hearth process of making steel, §60, p4.
hearth steel for tools, §59, p29.
Operation of brazing, §63, p39.
Ore, Iron, §57, p1.
Ores, Impurities in, §57, p1.
Lean, §57, p1.
Rich, §57, p1.
Outside calipers, §56, p31.
Oven-annealing furnace, §59, p34.
Chimney for annealing, §53, p19.
Coal-dust-burning equipment for annealing, §53, p16.
Gas-burning equipment for annealing, §53, p14.
Oil-burning equipment for annealing, §53, p15.
Producer-gas-burning equipment for annealing, §53, p17.
Ovens, Annealing, §53, p8.
Charging annealing, §53, p19.
Core, §50, p18.
Ovens—(Continued)
Discharging annealing, §53, p23.
Firing annealing, §53, p20.
Heating annealing, §53, p12.
Overhead exhaust system, §56, p9.
Oxidation in melting brass, §54, p20.
of iron, §57, p27.
Oxide of copper, §63, p44.
of iron, §63, p44.
Oxidizing fire, §56, p14.
Oxygen, §52, p21.

P

Pack hardening, §59, p11.
Packing material for annealing pots, Preparation of, §53, p24.
materials for case hardening, §60, p16.
materials for malleable castings, §53, p4.
work to obtain colors, §60, p24.
Parting material for brass mold, §54, p2.
Patterns, Machines for drawing, §48, p9.
Match plates with movable, §48, p21.
Match plates with removable, §48, p22.
Peel for charging a furnace, §52, p12.
Phosphor-bronze, §54, pp35, 36.
tin, §63, p35.
Phosphorus, Characteristics of, §54, p36.
in coke, §56, p13.
in malleable iron, §51, p7.
objections to, in fuel, §56, p13.
Physical changes produced in annealing malleable castings, §53, p1.
properties of malleable iron, §51, p1.
Pickling brass castings, §54, p7.
castings, §50, p39; §52, p33.
solution, Hydrofluoric-acid, §50, p41.
solution, Sulphuric-acid, §50, p39.
Pick point, Method of steeling, §58, p27.
tongs, §56, p13.
Pig breakers, §49, p48.
iron, §57, p2.
Pill-heat mixture, §51, p17.
Pinching rolls, §62, p12.
Pins for flasks, §50, p7.
Pipe, Bending brass, §63, p45.
Bending copper, §63, p45.
Welding, §57, p52.
Pipes, Machine for molding curved, §48, p29.
Piping, §60, p6.
Plane irons, §59, p20.
irons, Tempering, §59, p21.
Plate, Core, §50, p17.
iron, Weight of, §63, p52.
Surface, §56, p28.
Plates, Bending, §63, p22.
Rolling, §62, p4.
Plowshares, Machine for molding, §48, p30.

Plug and feather drill, §58, p23.
Pneumatic chipping hammer, §50, p28.
forging machine, §62, p34.
hoist, §63, p15.
power molding machine, §48, p13.
rammers, §48, p1.
rammers, Pressure of air for, §48, p1.
sifter, §49, p34.
Point of recalescence, §59, p2.
Points of carbon, §58, p4.
Poker, §56, p16.
Poppets, §62, p16.
Portable forges, §56, p12.
molding machines, §48, p8.
Porter bars, §61, p21.
Ports of regenerative furnace, Repairing, §52 p9.
Position of work on anvil, §57, p6.
Positive rotary blower, §56, p8.
Pot mixture for annealing pots, §51, p16.
Potash, Use of, in case hardening, §60, p29.
Potassium cyanide, §60, p17.
cyanide, Use of, for case-hardening tools, §60, p18.
Pots, Annealing, §53, p6.
Covering of annealing, §53, p7.
for case hardening, §60, p26.
Life of annealing, §53, p8.
Packing annealing, §53, p6.
Preparation of packing material for, §53 p24.
Shaking out annealing, §53, p23.
Pouring iron for malleable casting, §52, p28.
Power hack saw, §56, p38.
hammer, Definition of, §61, p1.
hammer work, §61, p9.
hammers, §61, p1.
Practical examples of forging, §57, p46.
Precautions in forging steel, §61, p30.
in upsetting, §57, p15.
Preparing specimen piece, §58, p6.
Presses, §62, p1.
and punches, §62, p29.
Horizontal, §62, p31.
Inclined, §62, p30.
Press, Hydraulic forging, §61, p31.
Steam drop, §62, p18.
Strap and pulley drop, §62, p16.
Pressure of air used in pneumatic rammers, §48, p1.
Principles and application of case hardening, §60, p15.
Pritchel hole, §56, p18.
hole, Use of, in bending iron, §57, p9.
Producer gas, Amount of, from one ton of coal, §52, p24.
Gas, and its connections, §52, p21.
Producer—(Continued)
gas as furnace fuel, §52, p20.
gas-burning equipment for annealing oven, §53, p17.
gas, Composition of, §52, p20.
Producing temper colors on case-hardened work, §60, p26.
Production of blast, §56, p5.
of hard spots in work, §60, p23.
of soft spots in case-hardening work, §60 p22.
Proper weight of hammer, §61, p18.
Properties of low-carbon steel, §60, p1
Prussiate of potash, §60, p18.
Puddler's rabble, §57, p4.
Puddle scale for packing malleable castings §53, p4.
Puddling, Hand, §57, p3.
machines, §57, p4.
Mechanical, §57, p4.
process, §57, p3.
Punch, Center or prick, §56, p35.
Punches, §56, p24.
Steel for, §59, p28.
Pyrometer, Le Chatelier, §53, p21.
Siemens water, §53, p21.
Use of, in annealing oven, §53, p21.
Pyrometers, §59, p44.

R

Rabble, §57, p4.
Rabbles, Broad-bladed, §57, p4.
Rabbling, §60, p5.
a charge of malleable iron, §51, p30.
bars, §51, p30.
Racks, Core, §50, p17.
Rammers, Pneumatic, §48, p1.
Ramming, §57, p14.
Razor temper, §58, p4.
Reamers and taps, §59, p9.
and taps, Straightening, §59, p14
and taps, Tempering of, §59, p14.
Steel for, §59, p28.
Recalescence, §59, p2; §60, p8.
Reciprocating conveyers, §49, p30.
Recognizing steel, §58, p33.
Reducing fire, §57, p28.
Regenerative chambers for melting furnace §52, p1.
furnace, Gas valves for, §52, p3.
furnace, Repairing, §52, p9
Reheating furnace, §53, p34.
Reins, §56, p26.
Relative advantages of handling devices, §63 p15.
Resilience of malleable iron, §51, p2
Resin, §63, p32.

Resin—(Continued)
Use of, in muffle, §59, p3.
Use of, in tubing, §63, p45.
Use of, on copper bit, §63, p33.
Reverberatory furnace, §63, p2.
furnace, Double-decked, §63, p8.
furnace, Use of waste heat from, §63, p7.
Reverse shaft, Locomotive, §57, p47.
shaft, Method of forging, §57, p47.
Rich ores, §57, p1.
Rifle barrels, Rolling, §62, p7.
Ring hook, Method of making, §57, p37.
Length of stock for, §57, p37.
Riveting, §63, p16.
machines, §63, p17.
Rocker-arm, Method of forging, §57, pp46, 47.
Rolling bars, §62, p2.
Cross, §62, p6.
Graded, §62, p5.
operations, §62, p2.
plates, §62, p4.
rifle barrels, §62, p7.
Screw-thread, §62, p9.
Special graded, §62, p8.
with dies, §62, p5.
Rolls, §62, p1.
Bending, §62, p11.
Pinching, §62, p12.
Three-high, §62, p2.
Rope-lift hammer, §62, p15.
Rosin grinder, §50, p27.
Rotary blower, §56, p7.
fan, §56, p5.
Rough welding, §61, p29.
Roughing, §61, p29.
Round drawing, §57, p7.
Rubber-belt conveyer, §49, p32.
cushioned helve hammer, §61, p3.
Rudder frame, Method of forging, §57, p51.

S

Safety valves in blast pipes, §56, p11.
Sal ammoniac, §63, p32.
ammoniac, Use of, on copper bit, §63, p33
Salgee antifriction metal, §54, p35.
Salt solutions, §59, p6.
Sand blast for cleaning castings, §50, p41; §52, p33.
blast, Helmet for, operator, §50, p43.
blast tumbling barrels, §50, p43.
conveyers, §49, p29.
elevators, §49, p40.
for brass work, §54, p2.
mixers, §49, p36.
sifters, §49, p32.
temper-drawing furnace, §59, p37.
Sand—(Continued)
tempering machine, §49, p39.
Use of, for bluing steel, §60, p36.
Use of, for temper-drawing, §59, p37.
Saw-file temper, §58, p4.
Gate, §50, p32.
Saws, Band, for metal, §50, p33.
for metal, §59, p24.
Hack, §56, p36.
Scarf welding, §57, p29.
welds, §57, p29.
welds, Examples of, §57, p33.
Scrap, Annealed, §51, p11.
Hard, §51, p11.
Malleable-iron, §51, p11.
metal for brass and bronze castings, §54, p37.
Steel, §51, p11.
Screw-thread rolling, §62, p9.
Scriber, §56, p34.
Second-motion dies, §62, p32.
Selection of steel, §59, p28.
Self-hardening steel, §58, p29.
Separators, Magnetic, §49, p36.
Set hammers, §56, p22.
temper, §58, p5.
Setting an anvil, §56, p18.
Shaft, Flexible, §50, p30.
Shafts, Forging hollow, §61, p34.
Forging, in pairs, §61, p31.
Forging large iron, §61, p29.
Shank for crucible, §54, p20.
mills, Heating, hardening, and tempering §59, p19.
Shear of blades, §62, p28.
steel, §58, p1.
Vertical, §62, p28.
Shears, §62, p27.
Sheet iron, Weight of, §63, p52.
Shingle slab, §61, p28.
Shingling, §57, p33; §61, p28.
Shovel, §56, p16.
Shrinkage of malleable iron, §51, p3.
Shrinker, Use of, in molds for malleable castings, §52, p27.
Side cutter, §56, p25.
tool, Method of forging, §58, p17.
Siemens-Martin process for malleable iron §52, p1.
valves, §52, p3.
water pyrometer, §53, p21.
Sifter, Pneumatic, §49, p34.
Silicon, Amount of, in charcoal iron, §51, p9
in malleable iron, §51, p4.
Use of, in alloys, §54, p22.
Silver solder, §63, p37.

Single calipers, §56, p31.
frame hammers, §61, p15.
Skimming tools, §51, p28.
Slab, §61, p28.
Shingle, §61, p28.
Slag, §57, p2.
Skimming of, for malleable furnace, §51, p28.
Slate pencils, §56, p33.
Sledge, Hand, §56, p19.
Swing, §56, p19.
Sledges, Weights of, §56, p20.
Slip-joint, §63, p41.
Small coke furnace, §63, p1.
work, Hardening, §60, p20.
work, Oil treatment of, §60, p14.
Snap flasks, §50, p12.
Soaking, §58, p9.
Soapstone pencil, §56, p33.
Use of, for marking hot work, §57, p7.
Soft coal, §56, p13.
solder, §63, p30.
tumbling, §53, p24.
Solder, §63, p30.
Composition of, for aluminum, §63, p35.
for band saws, §63, p44.
for tempered steel, §63, p43.
Half-and-half, §63, p30.
Hard, §63, p30.
Silver, §63, p37.
Soft, §63, p30.
Soldering, §63, p30.
aluminum, §63, p35.
Definition of, §63, p30.
Equipment for, §63, p30.
fluid and fluxes, §63, p31.
iron, §63, p30.
sweating and brazing, §63, p30.
Solid foundations, §62, p24.
Special applications of electric welding, §63, p24.
device for quenching work, §60, p33.
forging equipment, §63, p1.
forging operations, §63, p1.
furnaces for hardening and tempering, §59, p32.
graded rolling, §62, p8.
hardening tank, §59, p12.
hardie for stone drills, §58, p22.
heating furnace for high temperature, §63, p10.
tool dressing, §58, p20.
swages, §58, p20.
Specimen piece, §58, p6.
piece; Hardening, §58, p7.
piece, Preparation of, §58, p6.
Spelter, §63, p30.
Spelter—(Continued)
Composition of, §63, p37.
for brazing cast iron, §63, p44.
Selection of, §63, p40.
Use of, in brazing, §63, p37.
Spindle temper, §58, p4.
Spiral springs, §59, p28.
Spoons, Rolling, §62, p6.
Spout of a malleable furnace, §51, p26.
Spring, Forging a, §58, p24.
Hardening and tempering a, §58, p24.
Testing a, §58, p25.
Springs, §59, p25.
Annealing steel for, §59, p26.
Coiled, §59, p27.
Sprinkler, §56, p16.
Sprue cutter, §50, p32.
Sprues, §51, p11.
Square drawing, §57, p8.
headed bolt, §57, p16.
Squeezer, §62, p2.
Staff, §61, p27.
Staple, Forging a, §57, p10.
Star castings for tumbling barrels, §50, p34.
Stationary forges, §56, p1.
Steam drop hammer, §61, p14; §62, p17.
drop press, §62, p18.
forging hammer, §61, pp11, 12.
hammer, Definition of, §61, p1.
hammer valves, §61, p12.
hammers, §61, p10.
helve hammers, §61, p10.
Steel, Annealing low-carbon, §60, p9.
Bessemer process, §60, p2.
Blister, §58, p1.
Bluing polished, §60, p36.
Brazing tempered, §63, p42.
Breaking, §58, p36.
Burning of, §58, p26.
Carbon, §58, p1.
Cast, §58, p2.
casting, §58, p3.
castings, Iron flasks for, §50, p2.
Cooling, §38, p27.
Crucible, §58, p1.
Double-shear, §58, p2.
Effect of carbon on, §58, p26, §59, p1
Effect of heating low-carbon, §58, p26, §60, p8.
Effect of repeated heating on, §63, p26.
facing, §58, p28.
Fluid compression of, §60, p7.
for dies, §59, p28.
for punches, §59, p28.
for reamers, §59, p28.
for taps, §59, p28.
for turning chilled iron, §59, p28.

Steel—(Continued)
Forging high-carbon, §61, p36.
Forging low-carbon, §61, p30.
forgings, Annealing, §60, p11.
Heating furnace for high-speed, §58, p32.
Manufacture of low-carbon, §60, p1.
manufacture, temper, and treatment, §58, p1.
Merchant, §60, p1.
Methods of recognizing, §58, p33.
Nickel, §60, p7.
Oil treatment of low-carbon, §60, p13.
Open-hearth process, §60, p4.
Precautions in forging, §61, p30.
Properties of low-carbon, §60, p1.
scrap, §51, p11.
Selection of, §59, p28.
Shear, §58, p1.
Single-shear, §58, p2.
Temper of, §58, p4.
Temperatures for treating, §60, p15.
Tempering and annealing low-carbon, §60, p14.
Thermit, §63, p27.
Tool, §58, p1.
Use of Bessemer or open-hearth, for tools, §59, p29.
Welding, §61, p30.
Welding, to iron, §61, p34.
wire brushes, §50, p30.
Steeling, §58, p27.
a pick point, §58, p27.
Steels, Air-hardening, §58, p29.
Alloy, §58, p1.
Carbon, §59, p1.
Comparison of Bessemer and open-hearth §60, p5.
Cooling high-speed, §58, p31.
Definitions of, §58, p1.
Forging high-speed, §58, p30.
Grinding high-speed, §58, p32.
Heating high-carbon steels in charcoal, §59, p4.
High-carbon, §58, p1.
Low-carbon, §59, p1.
Off-heats of, §59, p29.
Self-hardening, §58, p29.
Tempering high-speed, §58, p30.
Tool, §58, p1; §59, p1.
Stock, Allowance of, for welds, §63, p48.
Estimation of, §63, p47.
for bolts, §57, p20.
yard for foundry, §49, p11.
Stocks, §61, p21.
Stone chisel, §58, p20.
drills, Dressing, §58, p23.
drills, Special hardie for, §58, p22.
Stool for annealing pots, §53, p6.
Storage of malleable castings, §53, p30.
Straight-draft furnace, §51, p21.
peen hammers, §56, p19.
Strap and pulley drop press, §62, p15.
hammers, §61, p5.
Knuckle-joint, §57, p43.
lift hammer, §62, p15.
Straps, Methods of forging, §57, p26.
Stripping-plate molding machine, §48, p10.
Structural shapes, Method of bending, §63, p21.
Sulphuric-acid pickling solution, §50, p39.
Sulphur in coke, §56, p13.
in malleable iron, §51, p6.
Objections to, in fuel, §56, p13.
Presence of, in fuels, §59, p2.
Support of tubing while it is being bent, §63, p45.
Surface gauge, §56, p29.
plate, §56, p28.
plate, Erection of, §56, p29.
Swage, §56, p23.
blocks, §56, p27.
bottom, §56, p25.
for chisel heads, §58, p21.
Swages, §61, p23.
Special, §58, p20.
with handles, §61, p24.
Sweating, §58, p31; §63, pp30, 36.
Swing sledge, §56, p20.
sledges, §56, p19.

T

T-headed planer bolt, §57, p18.
T-plate, Method of making, §57, p35.
Tallow, §63, p32.
Tank for hardening tools, §59, p12.
Tape, Measuring, §56, p36.
Tapered mandrel, §56, p28.
Tapping iron for malleable castings, §52, p27.
spouts of a furnace, Arrangement of, §52, p14.
Taps and reamers, §59, p9.
and reamers, Cooling baths for, §59, p12
and reamers, Straightening, §59, p14.
and reamers, Tempering of, §59, p14.
Steel for, §59, p28.
Taylor-White heat treatment process, §59, p29.
Telltale, §59, p11.
Telltales or indicators, §60, p24.
Telphers, §49, p29.
Temperature for brazing, §63, p40.
Temperatures corresponding to temper colors, §58, p8.
corresponding to various colors, §63, p49.

Temperatures—(Continued)
for treating steel, §60, p15.
Temper, Carbon, §51, pp1, 8.
Chisel, §58, p4.
color chart, §58, p8.
colors, §58, p7; §59, p8.
colors and corresponding temperatures, Table, §58, p9.
colors, Temperatures corresponding to, §58, p8.
Die, §58, p5.
Meaning of, §58, p4.
Measurement of, in annealing oven, §53, p21.
Method of drawing, §58, p7.
of tool steel, §58, p4.
Razor, §58, p4.
Saw-file, §58, p4.
Set, §58, p5.
Spindle, §58, p4.
Tool, §58, p4.
Tempering boring tool, §58, p20.
by color, §59, p8.
circular saws, §59, p23.
cold chisel, §58, p12.
Definition of, §58, pp4, 6.
dies, Method of, §59, p25.
drills, §59, p16.
high-speed steel, §59, p31.
high-speed tool steels, §58, p30.
in oil, §59, p8.
large spiral springs, §59, p28.
large springs, §59, p26.
milling cutters, §59, p19.
of taps and reamers, §59, p14.
plane irons, §59, p21.
side tool, §58, p18.
small springs, §59, p27.
Tensile strength of malleable iron, §51, p1.
Test plug, §51, pp27, 28.
Testing a spring, §58, p25.
Theory of case hardening, §60, p15.
of electric welding, §63, p23.
Thermit, §60, p7; §63, p26.
steel, §63, p27.
Use of heat from, §63, p28.
welding, §63, p26.
welds, Molds for, §63, p28.
Thermometer, Use of, in oil baths, §59, p17.
Use of, in tumbling-barrel furnace, §59, p35.
Three-high rolls, §62, p2.
Tilting open-hearth furnace, §52, p16.
Tin, §63, p35.
and copper alloys, §54, p25.
bath, §59, p7.
Block, §54, p26.
Grain, §54, p26.
Tinning, §63, p32
a copper bit, §63, p33.
iron, §63, p35.
Tip of mandrel, §56, p28.
Tire wheel, §56, p32.
Tongs, §56, p26.
Bolt, §56, p27.
Care of, §56, p26.
Coupler for, §56, p26.
Crucible, §54, p18.
Flat, §56, p27.
Gad, §56, p27.
Jaws of, §56, p26.
Method of making, §57, p41.
Parts of, §56, p26.
Pick-up, §56, p27.
Reins of, §56, p26.
V-shaped, §56, p27.
Tool dresser's forge, §59, p39.
dressing, §58, p1.
for patching furnace bottom, §52, p7.
Hammer, §61, p21.
Heading, §56, p25.
room forge, §59, p33.
steel, §58, p1.
steel, Methods of working, §58, p6.
steels, §58, p1; §59, p1.
steels, High-speed, §58, p29.
temper, §58, p4.
Tools and supplies for brazing, §63, p38.
Anvil, §56, p25.
Skimming, §51, p28.
Torches, Portable gasoline-fired, §63, p31.
Traveler, §56, p32.
Traveling crane, §63, p14.
crane, Use of, for charging annealing ovens, §53, p33.
cranes, §49, p16.
Traverse wheel, §56, p32.
Tray for oil treating steel, §60, p15.
Treatment of low-carbon steel, §60, p1.
Trip hammers, §61, p1.
Trolley system, §63, p12.
systems, §49, p24.
Truck, Charging, §53, p19.
Trucks for core ovens, §50, p21.
Tube or muffle in forge, §59, p2.
Tubing, Bending, §63, p45.
Materials for filling, when bending, §63, p46.
Tumbling-barrel furnace, §59, p35.
barrels, §50, p33; §52, p30.
barrels, Exhaust, §50, p36; §52, p31.
barrels for brass castings, §54, p7.
barrels, Oblique, §50, p37.
barrels, Sand-blast, §50, p43.
barrels, Star castings for, §50, p34.
barrels, Water, §50, p38.

Tumbling—(Continued)
hard castings, §52, p29.
soft castings, §53, p24.
Turning tool for marble, §58, p23.
Tuyère, Definition of, §56, p3.
iron, §56, p2.
Tweezers, Method of brazing, §63, p42.
Twist drills, §59, p15.
Twisting, §57, p11.
Definition of, §57, p5.
the hook, §57, p14.
Types of brazed joints, §63, p41.
of hammer frames, §61, p15.

U

Use of old bone, §60, p23.
of thermit to prevent piping, §60, p7.
Useful tables, §63, p49.
Upright helve hammer, §61, p5.
Upsetting, §57, p14.
Definition of, §57, p5.
Precautions in, §57, p15.
with a hammer, §57, p14.

V

V-shaped tongs, §56, p27.
Valve, Butterfly, §52, p10.
yoke, Locomotive, §57, p50.
yoke, Method of forging, §57, p50.
Valves, Siemens, §52, p3.
Steam hammer, §61, p12.
Ventilation, §56, p12.
of foundries, §49, p4.
Venting brass molds, §54, p4.
Vertical press or punch, §62, p29.
shear, §62, p28.
Vibrator for molding machine, §48, p14.
Vise, Anvil, §56, p30.
Bench, §56, p30.
jaws, §56, p31.
Leg, §56, p30.
Volts, §63, p22.

W

Wabbler heads, §62, p2.
Water and brine baths, §59, p42.
annealing, §59, p5.
bosh, §51, p29.
for hardening, §59, p6.
gauge, §56, p8.
trough, §56, p1.
Weight, volume, and measure of, §63, p53.
Weight of a lineal foot of flat bar iron, §63, p51.
of anvils, §56, p18.
of sheet and plate iron, §63, p52.
Weight—(Continued)
of square and round wrought iron, §63, p50.
volume, and measure of water, §63, p53.
Weights of hammers and sledges, §56, p20.
of various metals in ordinary use, §63, p53.
Welding, §57, p27.
Advantages of electric, §63, p24.
angles, §63, p20.
Apparatus used in electric, §63, p23.
boiler tubes, §57, p53.
Conditions governing, §57, p27.
Definition of, §57, p6.
Electric, §63, p22.
flat iron hoops, §63, p23.
Object of, §57, p27.
pipe, §57, p52.
Rough, §61, p29.
Special applications of electric, §63, p24.
steel, §61, p30.
steel to iron, §61, p35.
Thermit, §63, p26.
tool steel, §58, p25.
up scrap, §61, p27.
Welds, Butt, §57, p29.
Classification of, §57, p29.
Cleft, §57, p29.
Jump, §57, p29.
Lap, §57, p29.
Names of, §57, p29.
Scarf, §57, p29.
White iron, §51, p1.
lead, for marking, §56, p34.
metal, §54, p35.
Wind box, §56, p2.
Wire cutter, §50, p27.
Work involving butt welds, §57, p43.
involving lap welds, §57, p45.
involving scarf welds, §57, p33.
Working of metals by machine, §62, p1.
tool steel, §58, p6.
Wrench, Method of forging, §62, p21.
Wrought iron, Effect of careless heating of §57, p5.
iron, Effect of repeated heating on, §63 p25.
iron, Effects of reheating, §57, p5.
iron, Manufacture of, §57, p3.
iron, Nature and composition of, §57, p3
iron, Weight of square and round, §63, p50.

Z

Zinc, §63, p32.
Alloying, with copper, §54, p30.
and copper alloys, §54, p28.
Characteristics of, §54, p28.
White, for marking, §56, p34.